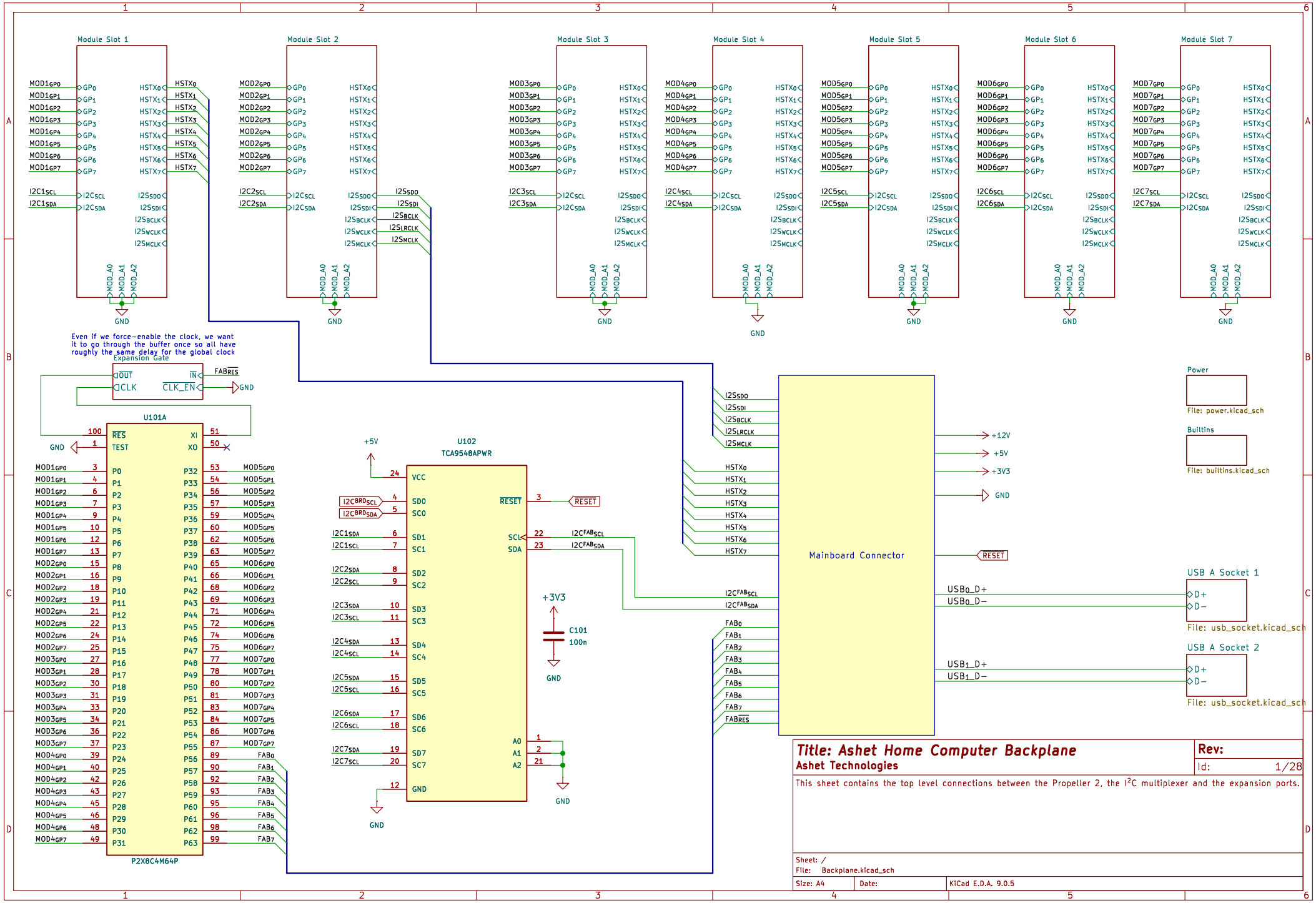
Module Slot 1
Module Slot 2
Module Slot 3
Module Slot 4
Module Slot 5
Module Slot 6
Module Slot 7
Even if we force-enable the clock, we want it to go through the buffer once so all have roughly the same delay for the global clock
Expansion Gate
U101A
P2X8C4M64P
U102
TCA9548APWR
+5V
+3V3
C101
100n
Mainboard Connector
Power
File: power.kicad_sch
Builtins
File: builtins.kicad_sch
USB A Socket 1
File: usb_socket.kicad_sch
USB A Socket 2
File: usb_socket.kicad_sch
Title: Ashet Home Computer Backplane
Ashet Technologies
Rev:
Id: 1/28
This sheet contains the top level connections between the Propeller 2, the I²C multiplexer and the expansion ports.
Sheet: /
File: Backplane.kicad_sch
Size: A4
Date:
KiCad E.D.A. 9.0.5

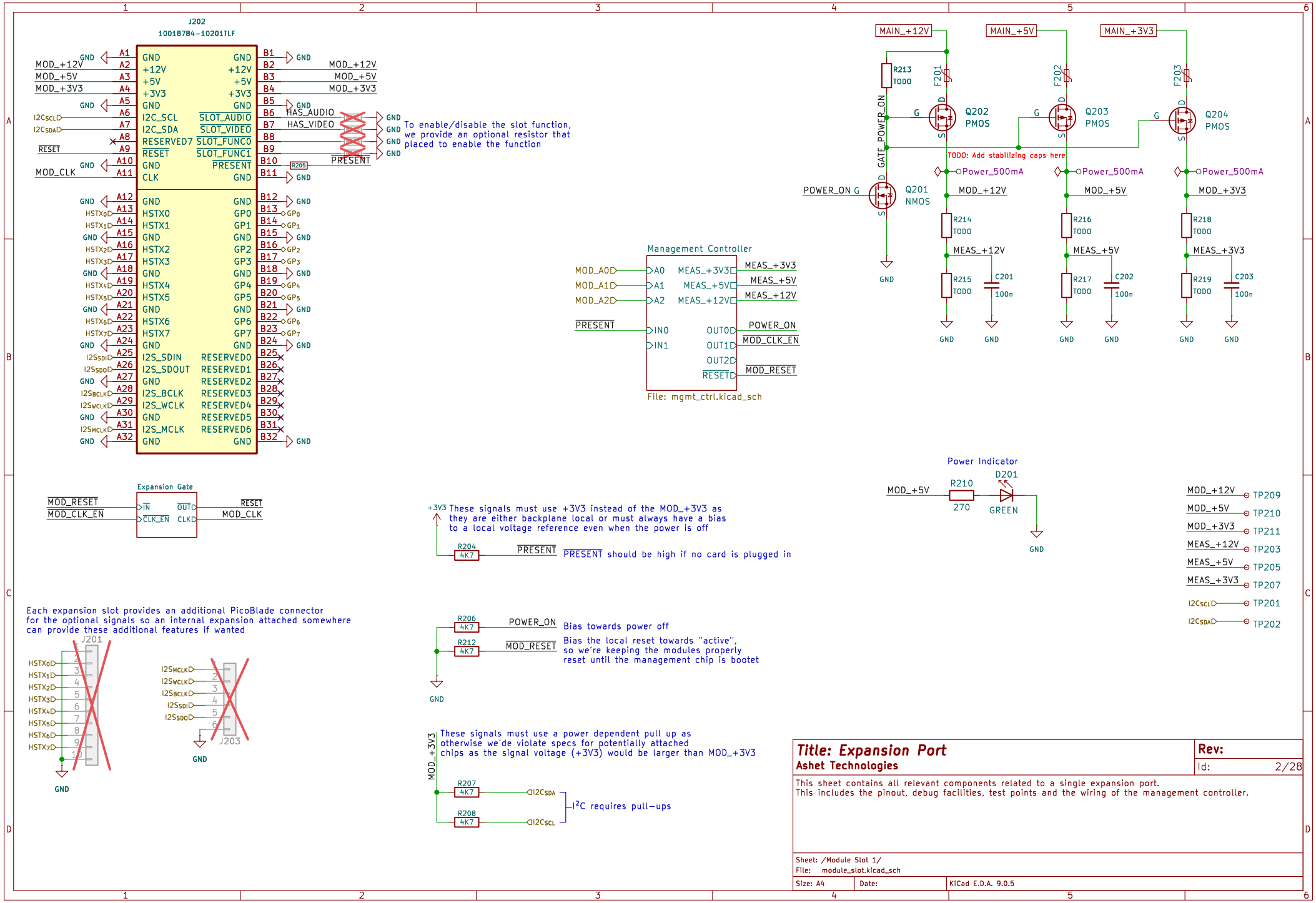
J202
10018784-10201TLF
To enable/disable the slot function, we provide an optional resistor that placed to enable the function
Management Controller
File: mgmt_ctrl.kicad_sch
MAIN_+12V
MAIN_+5V
MAIN_+3V3
Q202 PMOS
Q203 PMOS
Q204 PMOS
Q201 NMOS
TODO: Add stabilizing caps here
Power_500mA
MOD_+12V
MOD_+5V
MOD_+3V3
MEAS_+12V
MEAS_+5V
MEAS_+3V3
Expansion Gate
Power Indicator
GREEN
These signals must use +3V3 instead of the MOD_+3V3 as they are either backplane local or must always have a bias to a local voltage reference even when the power is off
PRESENT should be high if no card is plugged in
Each expansion slot provides an additional PicoBlade connector for the optional signals so an internal expansion attached somewhere can provide these additional features if wanted
Bias towards power off
Bias the local reset towards "active", so we're keeping the modules properly reset until the management chip is bootet
These signals must use a power dependent pull up as otherwise we'de violate specs for potentially attached chips as the signal voltage (+3V3) would be larger than MOD_+3V3
I²C requires pull-ups
Title: Expansion Port
Ashet Technologies
Rev:
Id: 2/28
This sheet contains all relevant components related to a single expansion port.
This includes the pinout, debug facilities, test points and the wiring of the management controller.
Sheet: /Module Slot 1/
File: module_slot.kicad_sch
Size: A4
Date:
KiCad E.D.A. 9.0.5

Global/Local Reset Merger

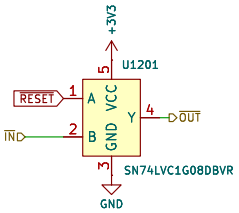

Clock Gate/Buffer

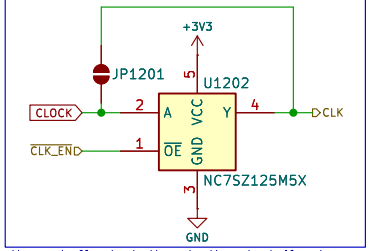

Use a buffer to both gate the clock if not required, but also prevent the any card from doing something bad to our global clock signal

Title: Clock and Reset Gate	**Rev:**
Ashet Technologies	Id: 12/28

This sheet contains the facilities to provide a locally triggerable $\overline{\text{RESET}}$ signal and a buffered version of the global clock signal

Sheet: /Module Slot 1/Expansion Gate/
File: reset_gate.kicad_sch

Size: A4	Date:	KiCad E.D.A. 9.0.5

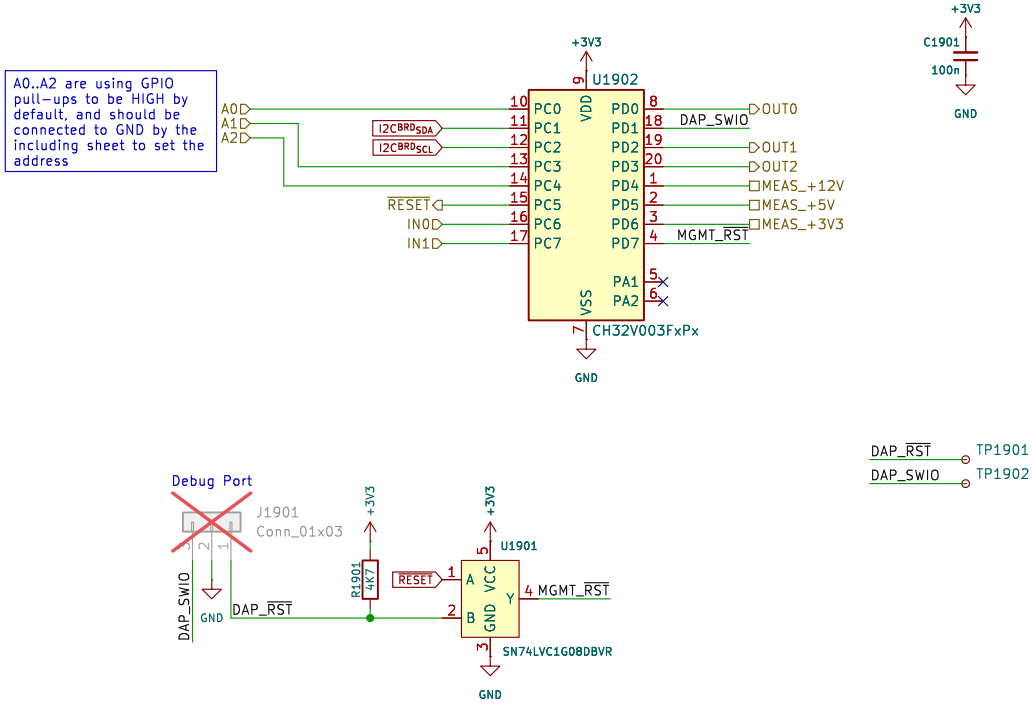

Title: I²C Power & Reset Management Controller

Ashet Technologies

Rev:

Id: 19/28

This sheet contains a standardized wiring of an I²C controlled MCU which allows triggering a local reset and control a hand full of outputs and inputs

Sheet: /Module Slot 1/Management Controller/

File: mgmt_ctrl.kicad_sch

Size: A4 | Date: | KiCad E.D.A. 9.0.5

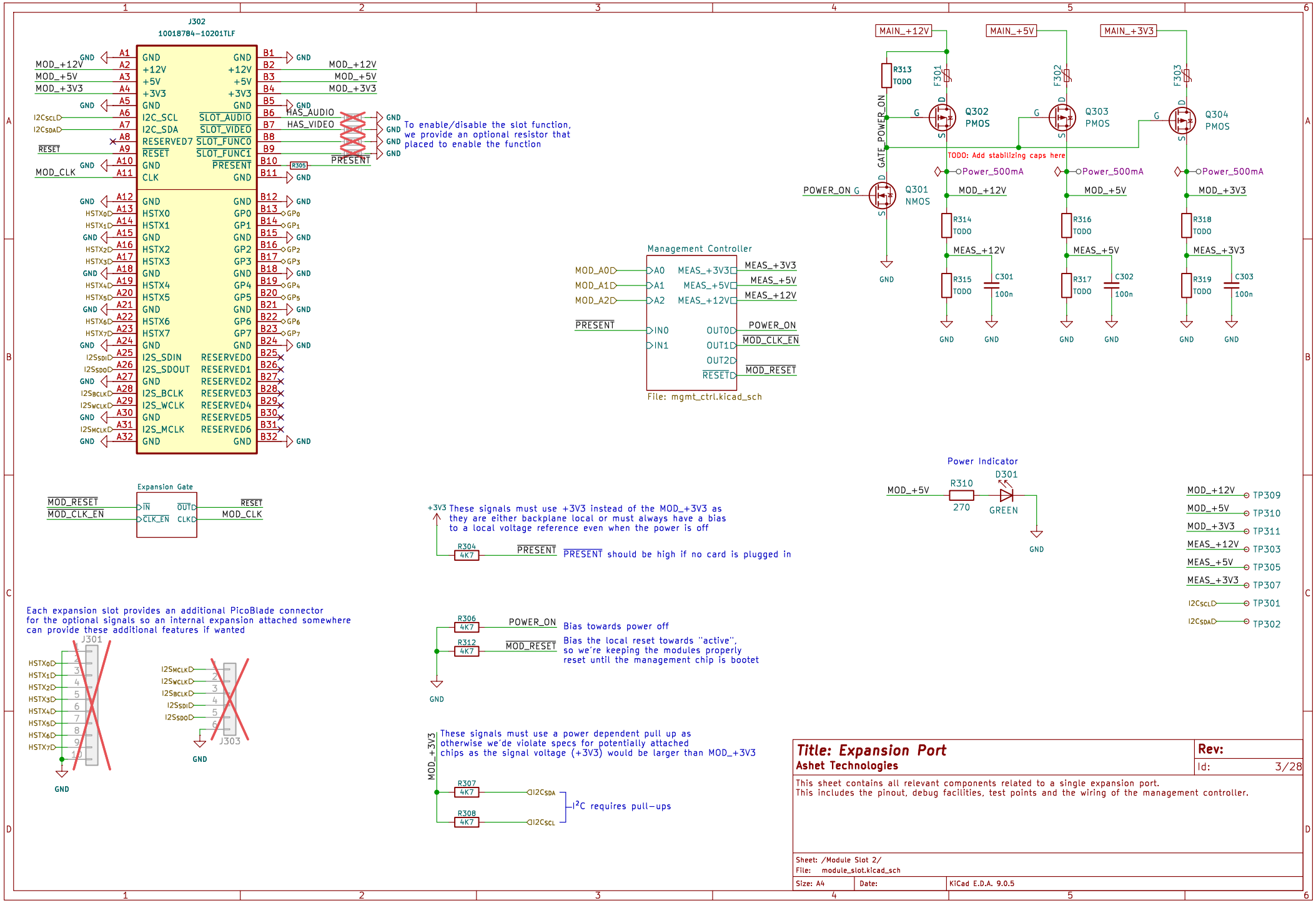

Title: Expansion Port

Ashet Technologies

Rev:

Id: 3/28

This sheet contains all relevant components related to a single expansion port.
This includes the pinout, debug facilities, test points and the wiring of the management controller.

Sheet: /Module Slot 2/
File: module_slot.kicad_sch

Size: A4 | Date: | KiCad E.D.A. 9.0.5

Global/Local Reset Merger

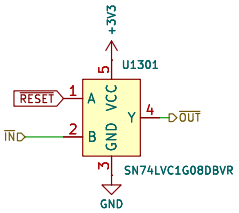

Clock Gate/Buffer

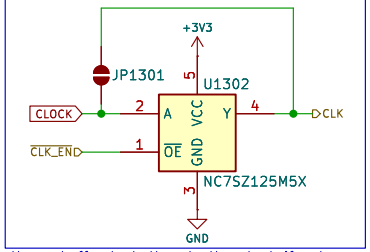

Use a buffer to both gate the clock if not required, but also prevent the any card from doing something bad to our global clock signal

Title: Clock and Reset Gate

Ashet Technologies

Rev:

Id: 13/28

This sheet contains the facilities to provide a locally triggerable $\overline{\text{RESET}}$ signal and a buffered version of the global clock signal

Sheet: /Module Slot 2/Expansion Gate/

File: reset_gate.kicad_sch

Size: A4 | Date: | KiCad E.D.A. 9.0.5

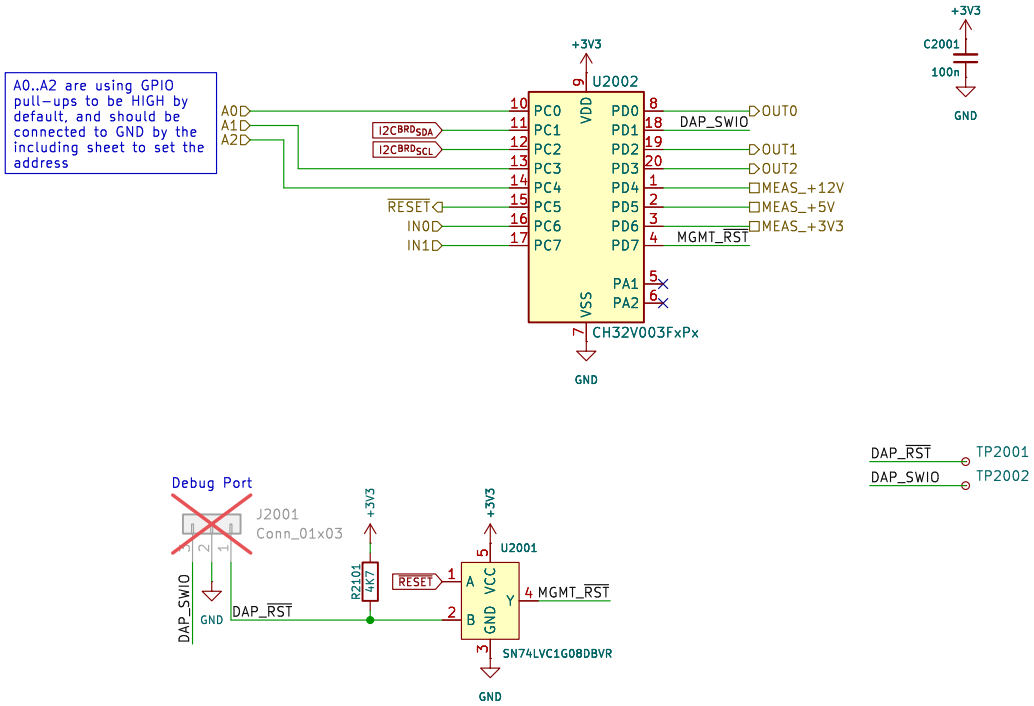

Title: I²C Power & Reset Management Controller

Ashet Technologies

Rev:

Id: 23/28

This sheet contains a standardized wiring of an I²C controlled MCU which allows triggering a local reset and control a hand full of outputs and inputs

Sheet: /Module Slot 2/Management Controller/

File: mgmt_ctrl.kicad_sch

Size: A4 | Date: | KiCad E.D.A. 9.0.5

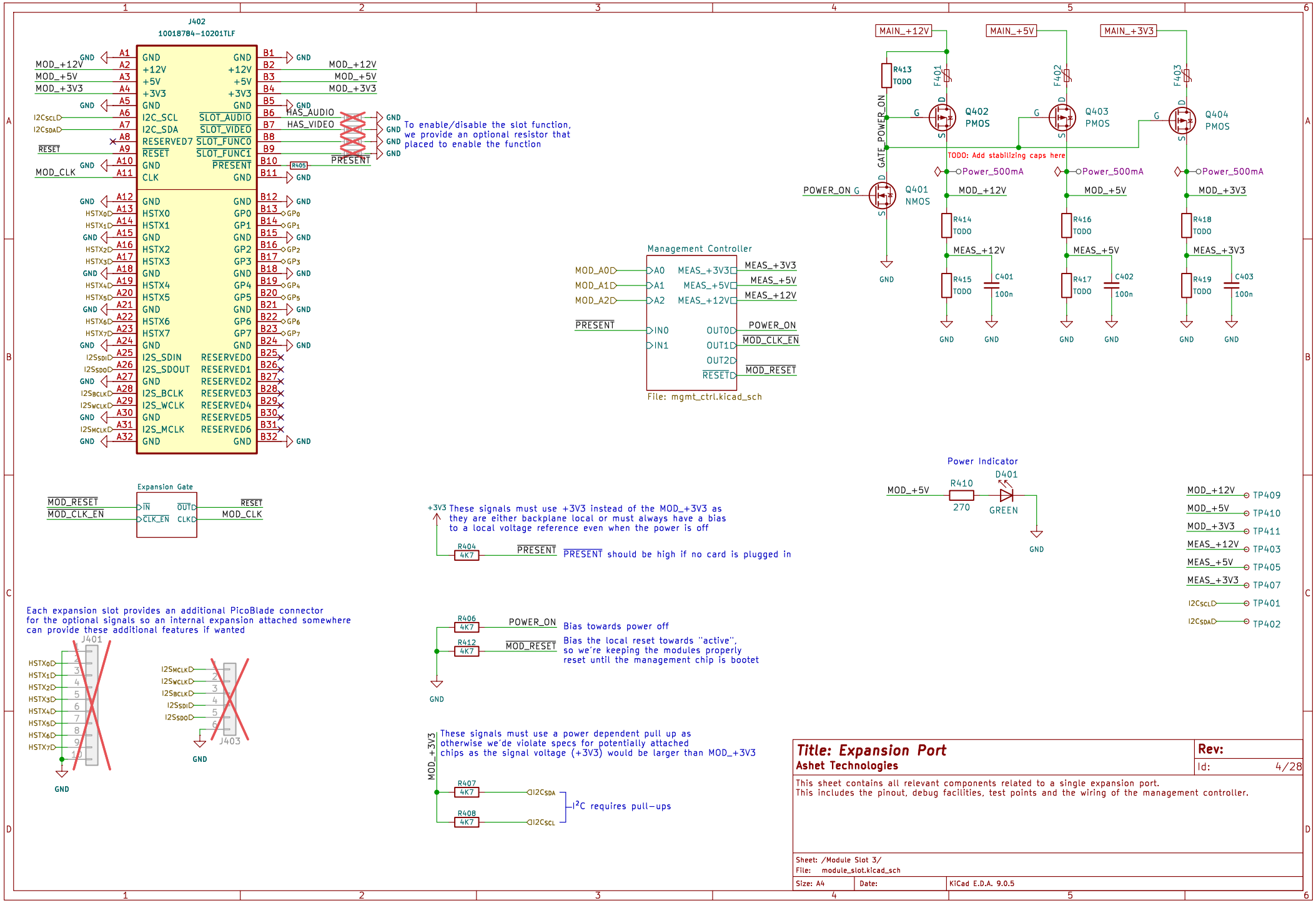
J402
10018784-10201TLF
MOD_+12V
MOD_+5V
MOD_+3V3
I2CSCLD
I2CSDAD
RESET
MOD_CLK
HSTX0D
HSTX1D
HSTX2D
HSTX3D
HSTX4D
HSTX5D
HSTX6D
HSTX7D
I2SSDID
I2SSDOD
I2SBCLKD
I2SWCLKD
I2SMCLKD
GND
+12V
+5V
+3V3
I2C_SCL
I2C_SDA
RESERVED7
CLK
HSTX0
HSTX1
HSTX2
HSTX3
HSTX4
HSTX5
HSTX6
HSTX7
I2S_SDIN
I2S_SDOUT
I2S_BCLK
I2S_WCLK
I2S_MCLK
SLOT_AUDIO
SLOT_VIDEO
SLOT_FUNC0
SLOT_FUNC1
PRESENT
HAS_AUDIO
HAS_VIDEO
GP0
GP1
GP2
GP3
GP4
GP5
GP6
GP7
RESERVED0
RESERVED1
RESERVED2
RESERVED3
RESERVED4
RESERVED5
RESERVED6
R405
To enable/disable the slot function, we provide an optional resistor that placed to enable the function
MAIN_+12V
MAIN_+5V
MAIN_+3V3
R413
TODO
F401
F402
F403
Q402
PMOS
Q403
PMOS
Q404
PMOS
POWER_ON
GATE_POWER_ON
Q401
NMOS
TODO: Add stabilizing caps here
Power_500mA
MOD_+12V
MOD_+5V
MOD_+3V3
R414
R416
R418
MEAS_+12V
MEAS_+5V
MEAS_+3V3
R415
R417
R419
C401
C402
C403
100n
Management Controller
MOD_A0
MOD_A1
MOD_A2
A0
A1
A2
IN0
IN1
MEAS_+3V3
MEAS_+5V
MEAS_+12V
OUT0
OUT1
OUT2
MOD_CLK_EN
MOD_RESET
File: mgmt_ctrl.kicad_sch
Expansion Gate
IN
CLK_EN
OUT
CLKD
Power Indicator
R410
270
D401
GREEN
TP409
TP410
TP411
TP403
TP405
TP407
TP401
TP402
+3V3
These signals must use +3V3 instead of the MOD_+3V3 as they are either backplane local or must always have a bias to a local voltage reference even when the power is off
R404
4K7
PRESENT should be high if no card is plugged in
Each expansion slot provides an additional PicoBlade connector for the optional signals so an internal expansion attached somewhere can provide these additional features if wanted
J401
J403
R406
R412
Bias towards power off
Bias the local reset towards "active", so we're keeping the modules properly reset until the management chip is bootet
These signals must use a power dependent pull up as otherwise we'de violate specs for potentially attached chips as the signal voltage (+3V3) would be larger than MOD_+3V3
R407
R408
I²C requires pull-ups
Title: Expansion Port
Ashet Technologies
Rev:
Id: 4/28
This sheet contains all relevant components related to a single expansion port.
This includes the pinout, debug facilities, test points and the wiring of the management controller.
Sheet: /Module Slot 3/
File: module_slot.kicad_sch
Size: A4
Date:
KiCad E.D.A. 9.0.5

Global/Local Reset Merger

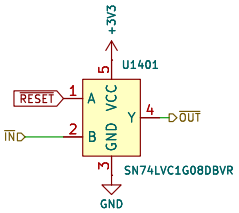

Clock Gate/Buffer

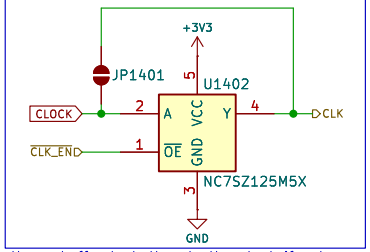

Use a buffer to both gate the clock if not required, but also prevent the any card from doing something bad to our global clock signal

Title: Clock and Reset Gate

Ashet Technologies

Rev:

Id: 14/28

This sheet contains the facilities to provide a locally triggerable $\overline{\text{RESET}}$ signal and a buffered version of the global clock signal

Sheet: /Module Slot 3/Expansion Gate/

File: reset_gate.kicad_sch

Size: A4 | Date: | KiCad E.D.A. 9.0.5

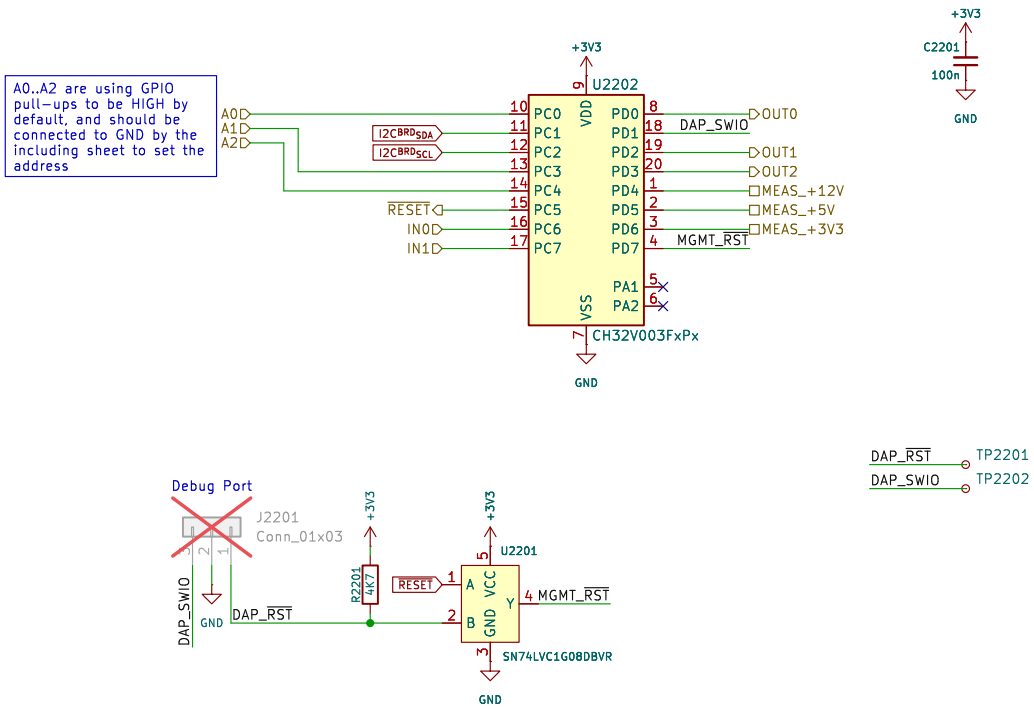

Title: I²C Power & Reset Management Controller

Ashet Technologies

Rev:

Id: 24/28

This sheet contains a standardized wiring of an I²C controlled MCU which allows triggering a local reset and control a hand full of outputs and inputs

Sheet: /Module Slot 3/Management Controller/

File: mgmt_ctrl.kicad_sch

Size: A4 | Date: | KiCad E.D.A. 9.0.5

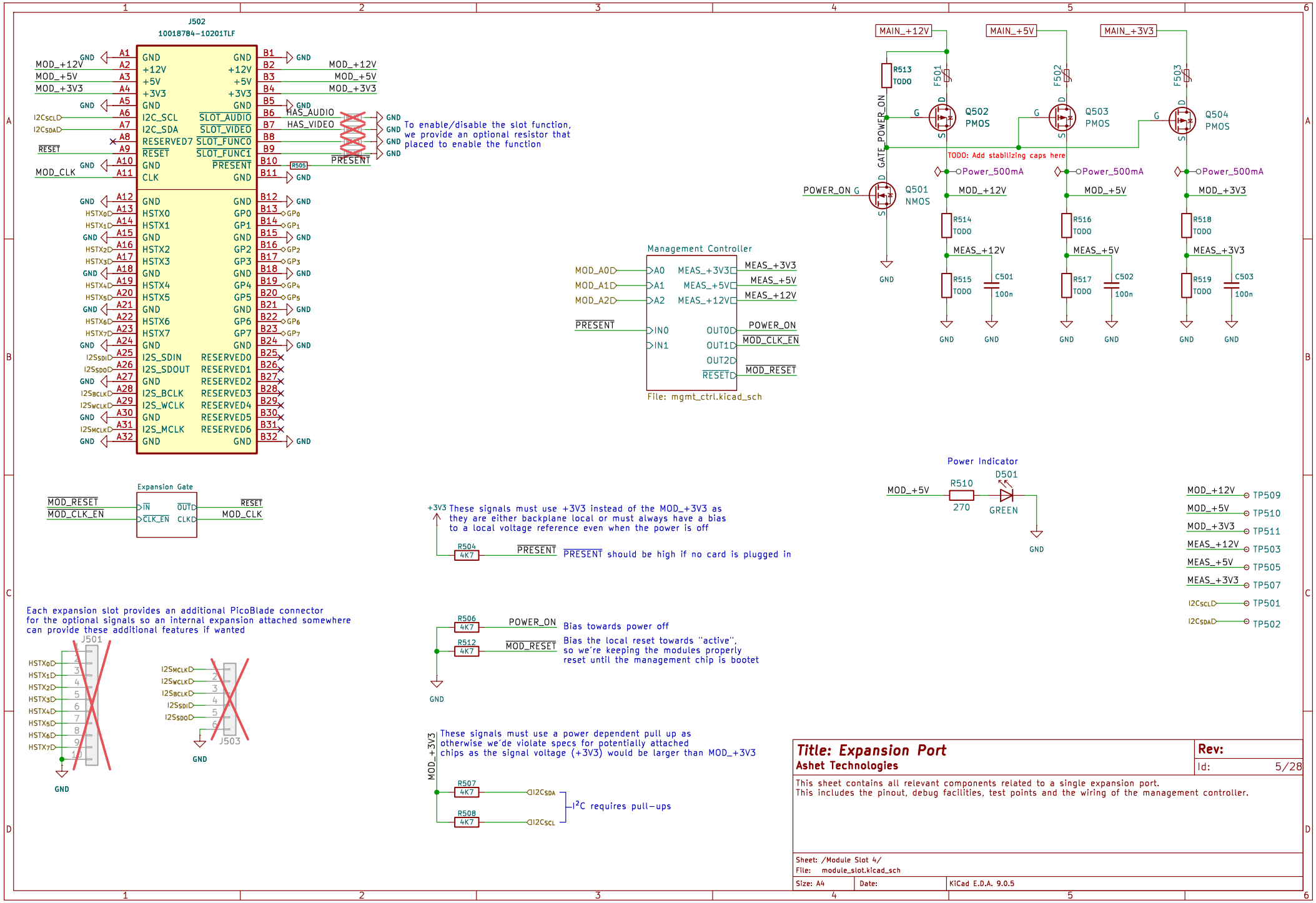
J502
10018784-10201TLF
MOD_+12V
MOD_+5V
MOD_+3V3
I2CSCLD
I2CSDAD
RESET
MOD_CLK
HSTX0D
HSTX1D
HSTX2D
HSTX3D
HSTX4D
HSTX5D
HSTX6D
HSTX7D
I2SSDID
I2SSDOD
I2SBCLKD
I2SWCLKD
I2SMCLKD
GND
+12V
+5V
+3V3
I2C_SCL
I2C_SDA
RESERVED7
CLK
HSTX0
HSTX1
HSTX2
HSTX3
HSTX4
HSTX5
HSTX6
HSTX7
I2S_SDIN
I2S_SDOUT
I2S_BCLK
I2S_WCLK
I2S_MCLK
SLOT_AUDIO
SLOT_VIDEO
SLOT_FUNC0
SLOT_FUNC1
PRESENT
HAS_AUDIO
HAS_VIDEO
GP0
GP1
GP2
GP3
GP4
GP5
GP6
GP7
RESERVED0
RESERVED1
RESERVED2
RESERVED3
RESERVED4
RESERVED5
RESERVED6
R505
To enable/disable the slot function, we provide an optional resistor that placed to enable the function
Management Controller
MOD_A0
MOD_A1
MOD_A2
PRESENT
A0
A1
A2
IN0
IN1
MEAS_+3V3
MEAS_+5V
MEAS_+12V
OUT0
OUT1
OUT2
RESET
POWER_ON
MOD_CLK_EN
MOD_RESET
File: mgmt_ctrl.kicad_sch
MAIN_+12V
MAIN_+5V
MAIN_+3V3
R513
TODO
F501
F502
F503
Q502
PMOS
Q503
PMOS
Q504
PMOS
Q501
NMOS
POWER_ON
GATE
TODO: Add stabilizing caps here
Power_500mA
MOD_+12V
MOD_+5V
MOD_+3V3
R514
R516
R518
MEAS_+12V
MEAS_+5V
MEAS_+3V3
R515
R517
R519
C501
C502
C503
100n
Expansion Gate
IN
OUT
CLK_EN
CLK
Power Indicator
R510
270
D501
GREEN
TP509
TP510
TP511
TP503
TP505
TP507
TP501
TP502
+3V3
These signals must use +3V3 instead of the MOD_+3V3 as they are either backplane local or must always have a bias to a local voltage reference even when the power is off
R504
4K7
PRESENT should be high if no card is plugged in
Each expansion slot provides an additional PicoBlade connector for the optional signals so an internal expansion attached somewhere can provide these additional features if wanted
J501
J503
R506
R512
Bias towards power off
Bias the local reset towards "active", so we're keeping the modules properly reset until the management chip is bootet
These signals must use a power dependent pull up as otherwise we'de violate specs for potentially attached chips as the signal voltage (+3V3) would be larger than MOD_+3V3
R507
R508
I²C requires pull-ups
Title: Expansion Port
Ashet Technologies
Rev:
Id: 5/28
This sheet contains all relevant components related to a single expansion port.
This includes the pinout, debug facilities, test points and the wiring of the management controller.
Sheet: /Module Slot 4/
File: module_slot.kicad_sch
Size: A4
Date:
KiCad E.D.A. 9.0.5

Global/Local Reset Merger

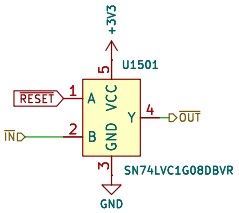

Clock Gate/Buffer

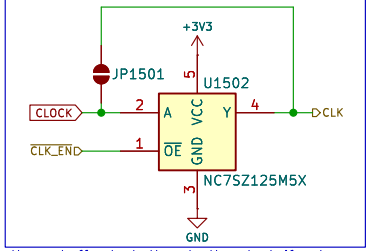

Use a buffer to both gate the clock if not required, but also prevent the any card from doing something bad to our global clock signal

Title: Clock and Reset Gate

Ashet Technologies

Rev:

Id: 15/28

This sheet contains the facilities to provide a locally triggerable $\overline{\text{RESET}}$ signal and a buffered version of the global clock signal

Sheet: /Module Slot 4/Expansion Gate/

File: reset_gate.kicad_sch

Size: A4 | Date: | KiCad E.D.A. 9.0.5

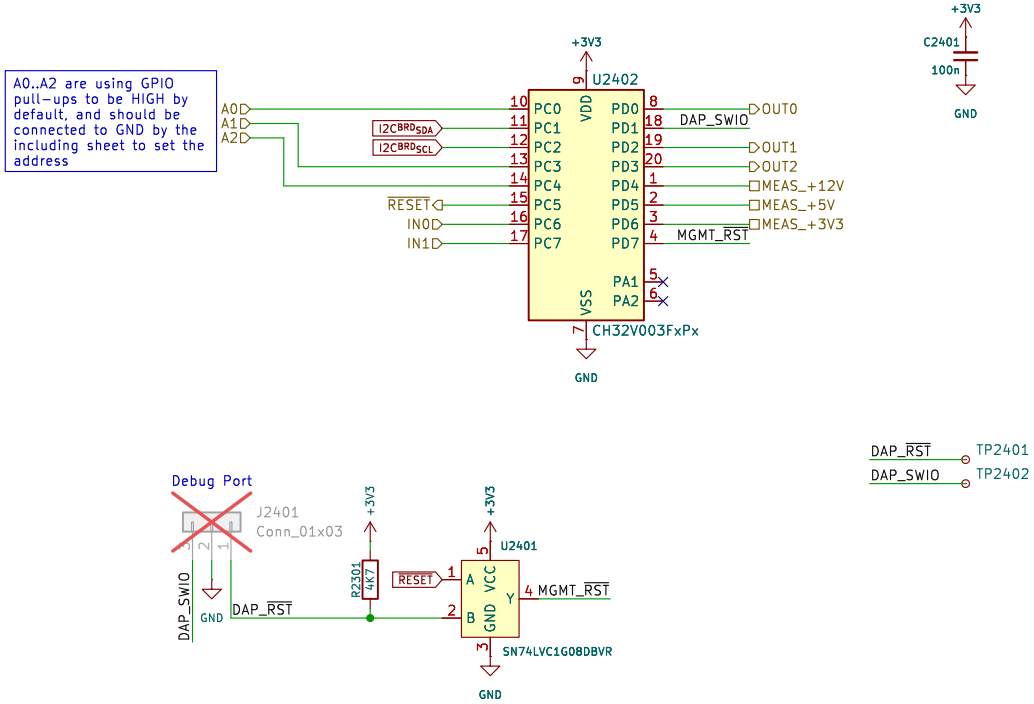

Title: I²C Power & Reset Management Controller

Ashet Technologies

Rev:

Id: 25/28

This sheet contains a standardized wiring of an I²C controlled MCU which allows triggering a local reset and control a hand full of outputs and inputs

Sheet: /Module Slot 4/Management Controller/

File: mgmt_ctrl.kicad_sch

Size: A4 | Date: | KiCad E.D.A. 9.0.5

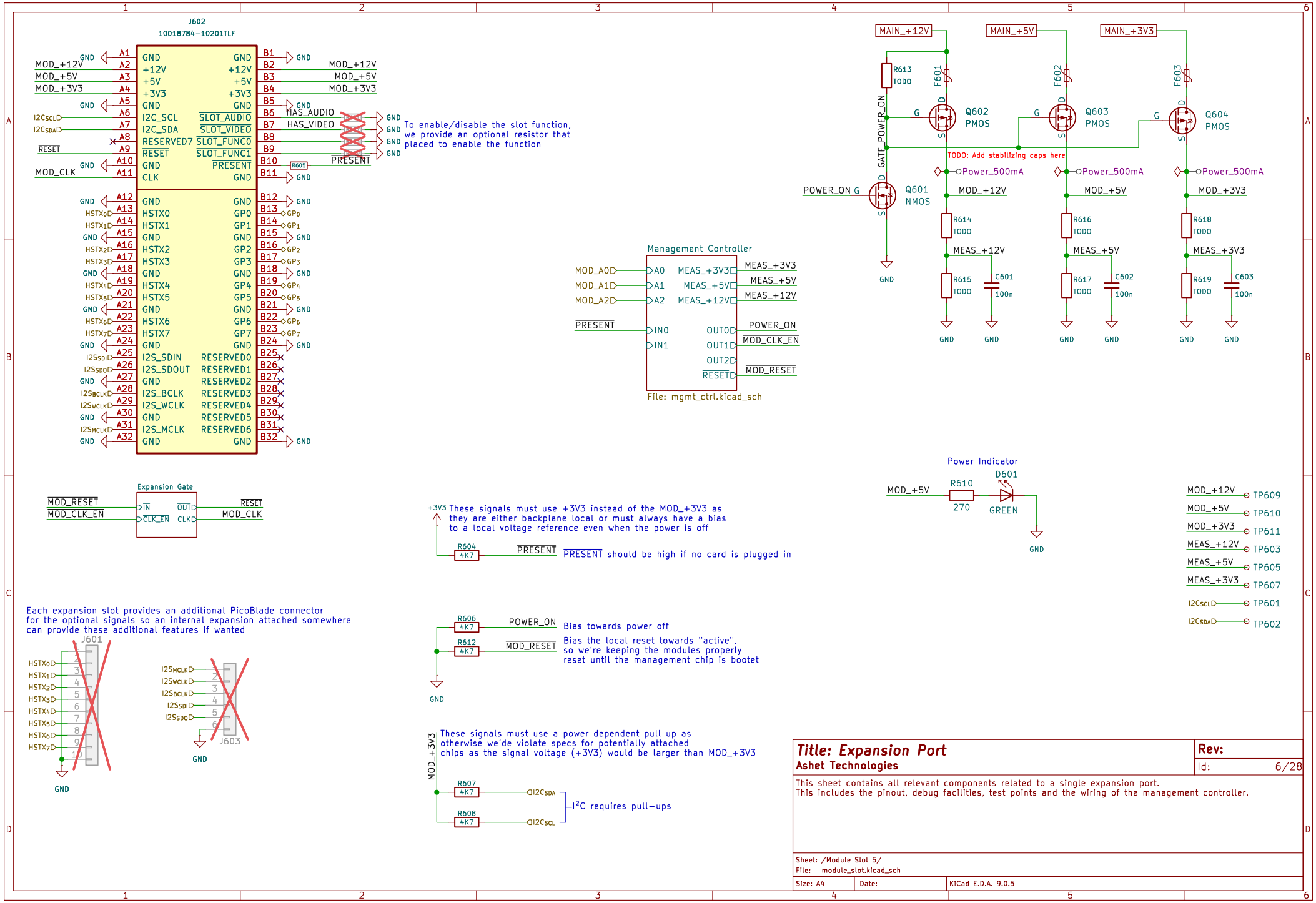
J602
10018784-10201TLF
MOD_+12V
MOD_+5V
MOD_+3V3
I2CSCLD
I2CSDAD
RESET
MOD_CLK
HSTX0D
HSTX1D
HSTX2D
HSTX3D
HSTX4D
HSTX5D
HSTX6D
HSTX7D
I2SSDID
I2SSDOD
I2SBCLKD
I2SWCLKD
I2SMCLKD
GND
+12V
+5V
+3V3
I2C_SCL
I2C_SDA
RESERVED7
CLK
HSTX0
HSTX1
HSTX2
HSTX3
HSTX4
HSTX5
HSTX6
HSTX7
I2S_SDIN
I2S_SDOUT
I2S_BCLK
I2S_WCLK
I2S_MCLK
SLOT_AUDIO
SLOT_VIDEO
SLOT_FUNC0
SLOT_FUNC1
PRESENT
HAS_AUDIO
HAS_VIDEO
GP0
GP1
GP2
GP3
GP4
GP5
GP6
GP7
RESERVED0
RESERVED1
RESERVED2
RESERVED3
RESERVED4
RESERVED5
RESERVED6
R605
To enable/disable the slot function, we provide an optional resistor that placed to enable the function
MAIN_+12V
MAIN_+5V
MAIN_+3V3
R613
TODO
F601
F602
F603
Q602
PMOS
Q603
PMOS
Q604
PMOS
POWER_ON
GATE_POWER_ON
Q601
NMOS
TODO: Add stabilizing caps here
Power_500mA
MOD_+12V
MOD_+5V
MOD_+3V3
R614
R616
R618
MEAS_+12V
MEAS_+5V
MEAS_+3V3
R615
R617
R619
C601
C602
C603
100n
Management Controller
MOD_A0
MOD_A1
MOD_A2
A0
A1
A2
IN0
IN1
OUT0
OUT1
OUT2
MEAS_+3V3
MEAS_+5V
MEAS_+12V
POWER_ON
MOD_CLK_EN
MOD_RESET
File: mgmt_ctrl.kicad_sch
Expansion Gate
IN
CLK_EN
OUT
CLKD
Power Indicator
R610
270
D601
GREEN
TP609
TP610
TP611
TP603
TP605
TP607
TP601
TP602
+3V3
These signals must use +3V3 instead of the MOD_+3V3 as they are either backplane local or must always have a bias to a local voltage reference even when the power is off
R604
4K7
PRESENT should be high if no card is plugged in
Each expansion slot provides an additional PicoBlade connector for the optional signals so an internal expansion attached somewhere can provide these additional features if wanted
J601
J603
R606
4K7
R612
4K7
Bias towards power off
Bias the local reset towards "active", so we're keeping the modules properly reset until the management chip is bootet
These signals must use a power dependent pull up as otherwise we'de violate specs for potentially attached chips as the signal voltage (+3V3) would be larger than MOD_+3V3
R607
4K7
R608
4K7
I²C requires pull-ups
Title: Expansion Port
Ashet Technologies
Rev:
Id: 6/28
This sheet contains all relevant components related to a single expansion port.
This includes the pinout, debug facilities, test points and the wiring of the management controller.
Sheet: /Module Slot 5/
File: module_slot.kicad_sch
Size: A4
Date:
KiCad E.D.A. 9.0.5

Global/Local Reset Merger

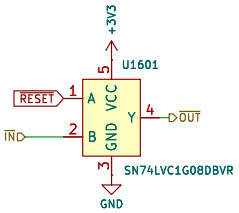

Clock Gate/Buffer

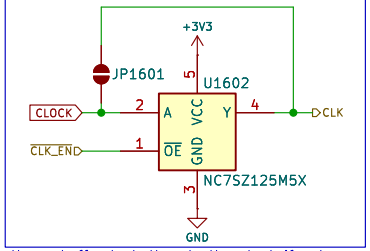

Use a buffer to both gate the clock if not required, but also prevent the any card from doing something bad to our global clock signal

Title: Clock and Reset Gate

Ashet Technologies

Rev:

Id: 16/28

This sheet contains the facilities to provide a locally triggerable $\overline{\text{RESET}}$ signal and a buffered version of the global clock signal

Sheet: /Module Slot 5/Expansion Gate/

File: reset_gate.kicad_sch

Size: A4 | Date: | KiCad E.D.A. 9.0.5

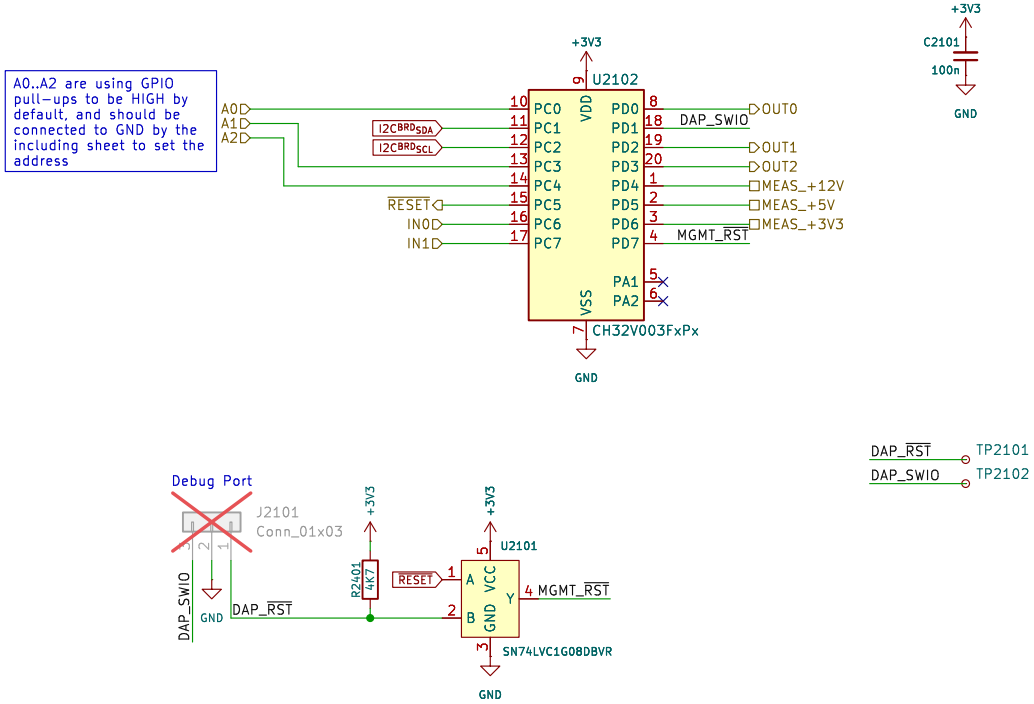

Title: I²C Power & Reset Management Controller

Ashet Technologies

Rev:

Id: 26/28

This sheet contains a standardized wiring of an I²C controlled MCU which allows triggering a local reset and control a hand full of outputs and inputs

Sheet: /Module Slot 5/Management Controller/

File: mgmt_ctrl.kicad_sch

Size: A4 | Date: | KiCad E.D.A. 9.0.5

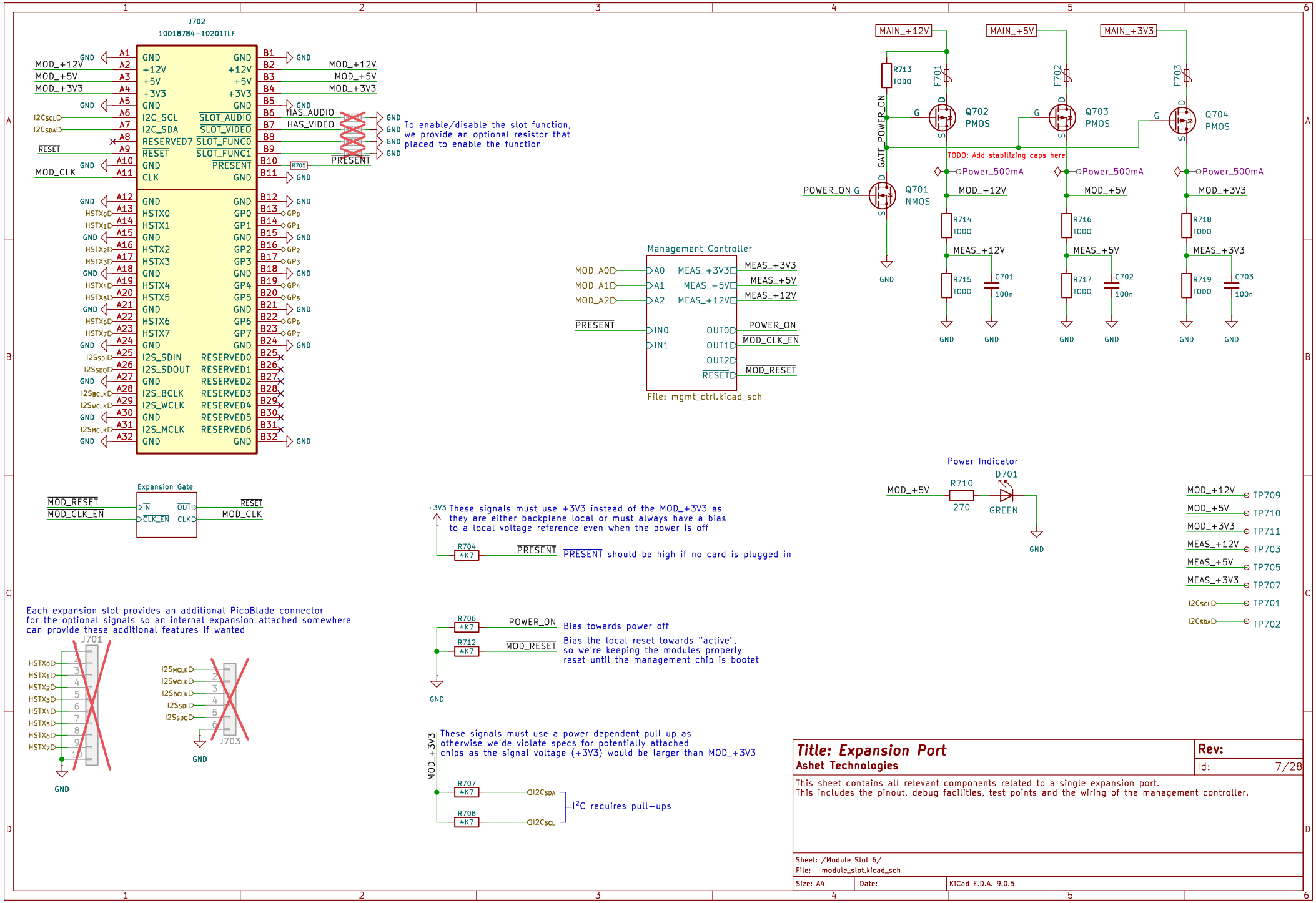
J702
10018784-10201TLF
MOD_+12V
MOD_+5V
MOD_+3V3
I2CSCLD
I2CSDAD
RESET
MOD_CLK
HSTX0D
HSTX1D
HSTX2D
HSTX3D
HSTX4D
HSTX5D
HSTX6D
HSTX7D
I2SSDID
I2SSDOD
I2SBCLKD
I2SWCLKD
I2SMCLKD
GND
+12V
+5V
+3V3
I2C_SCL
I2C_SDA
RESERVED7
CLK
HSTX0
HSTX1
HSTX2
HSTX3
HSTX4
HSTX5
HSTX6
HSTX7
I2S_SDIN
I2S_SDOUT
I2S_BCLK
I2S_WCLK
I2S_MCLK
SLOT_AUDIO
SLOT_VIDEO
SLOT_FUNC0
SLOT_FUNC1
PRESENT
GP0
GP1
GP2
GP3
GP4
GP5
GP6
GP7
RESERVED0
RESERVED1
RESERVED2
RESERVED3
RESERVED4
RESERVED5
RESERVED6
HAS_AUDIO
HAS_VIDEO
R705
To enable/disable the slot function, we provide an optional resistor that placed to enable the function
Management Controller
MOD_A0
MOD_A1
MOD_A2
PRESENT
A0
A1
A2
IN0
IN1
MEAS_+3V3
MEAS_+5V
MEAS_+12V
OUT0
OUT1
OUT2
RESET
POWER_ON
MOD_CLK_EN
MOD_RESET
File: mgmt_ctrl.kicad_sch
MAIN_+12V
MAIN_+5V
MAIN_+3V3
R713
TODO
F701
F702
F703
Q702
PMOS
Q703
PMOS
Q704
PMOS
Q701
NMOS
POWER_ON_GATE
TODO: Add stabilizing caps here
Power_500mA
MOD_+12V
MOD_+5V
MOD_+3V3
R714
R716
R718
MEAS_+12V
MEAS_+5V
MEAS_+3V3
R715
R717
R719
C701
C702
C703
100n
Expansion Gate
MOD_RESET
MOD_CLK_EN
IN
CLK_EN
OUT
CLK
RESET
MOD_CLK
+3V3
These signals must use +3V3 instead of the MOD_+3V3 as they are either backplane local or must always have a bias to a local voltage reference even when the power is off
R704
4K7
PRESENT should be high if no card is plugged in
Power Indicator
R710
270
D701
GREEN
TP709
TP710
TP711
TP703
TP705
TP707
TP701
TP702
Each expansion slot provides an additional PicoBlade connector for the optional signals so an internal expansion attached somewhere can provide these additional features if wanted
J701
J703
R706
R712
Bias towards power off
Bias the local reset towards "active", so we're keeping the modules properly reset until the management chip is bootet
These signals must use a power dependent pull up as otherwise we'de violate specs for potentially attached chips as the signal voltage (+3V3) would be larger than MOD_+3V3
R707
R708
I2CSDA
I2CSCL
I²C requires pull-ups
Title: Expansion Port
Ashet Technologies
Rev:
Id: 7/28
This sheet contains all relevant components related to a single expansion port.
This includes the pinout, debug facilities, test points and the wiring of the management controller.
Sheet: /Module Slot 6/
File: module_slot.kicad_sch
Size: A4
Date:
KiCad E.D.A. 9.0.5

Global/Local Reset Merger

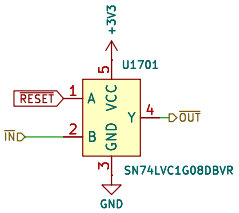

Clock Gate/Buffer

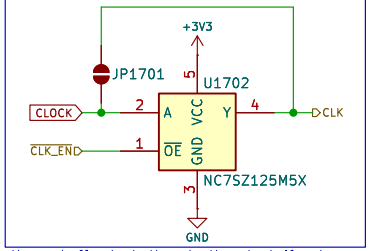

Use a buffer to both gate the clock if not required, but also prevent the any card from doing something bad to our global clock signal

Title: Clock and Reset Gate	**Rev:**
Ashet Technologies	Id: 17/28

This sheet contains the facilities to provide a locally triggerable $\overline{\text{RESET}}$ signal and a buffered version of the global clock signal

Sheet: /Module Slot 6/Expansion Gate/
File: reset_gate.kicad_sch

Size: A4	Date:	KiCad E.D.A. 9.0.5

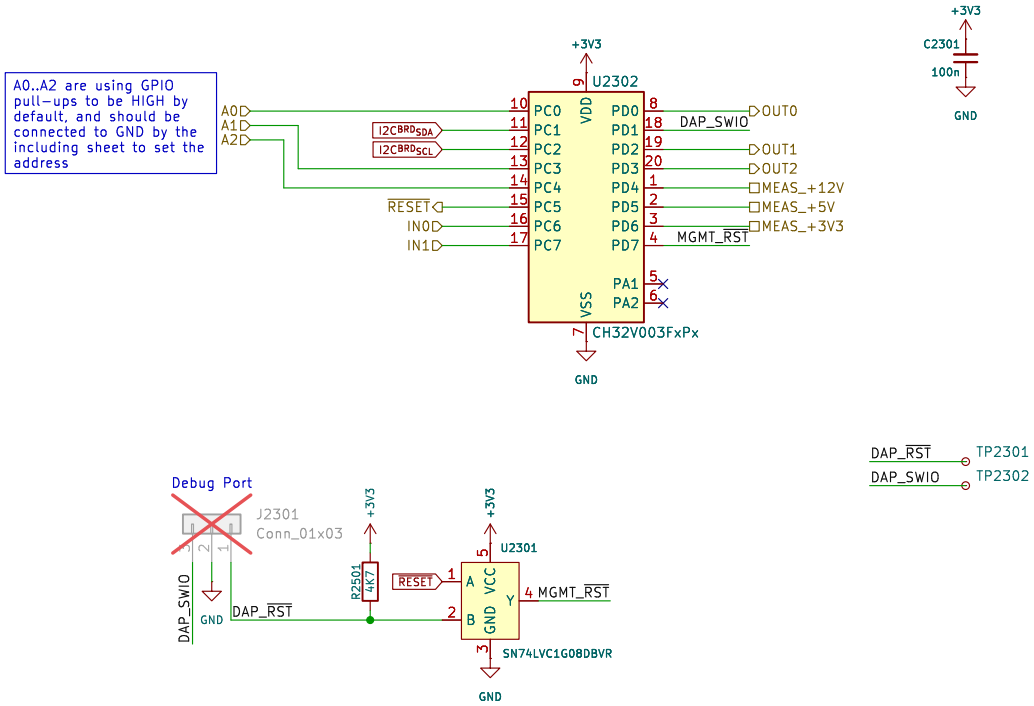

Title: I²C Power & Reset Management Controller

Ashet Technologies

Rev:

Id: 27/28

This sheet contains a standardized wiring of an I²C controlled MCU which allows triggering a local reset and control a hand full of outputs and inputs

Sheet: /Module Slot 6/Management Controller/

File: mgmt_ctrl.kicad_sch

Size: A4 | Date: | KiCad E.D.A. 9.0.5

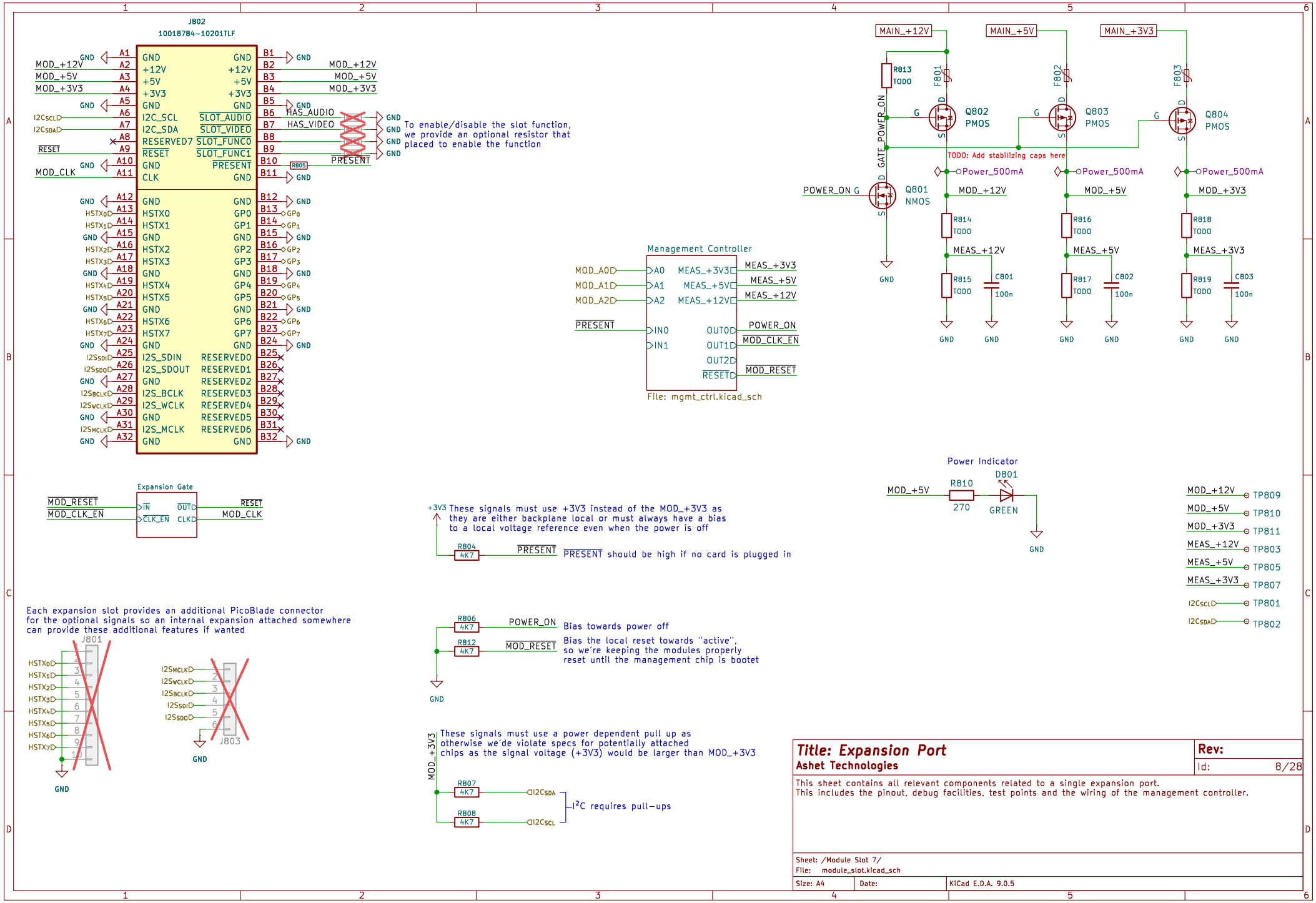
J802
10018784-10201TLF
MOD_+12V
MOD_+5V
MOD_+3V3
I2CSCLD
I2CSDAD
RESET
MOD_CLK
HSTX0D
HSTX1D
HSTX2D
HSTX3D
HSTX4D
HSTX5D
HSTX6D
HSTX7D
I2SSDID
I2SSDOD
I2SBCLKD
I2SWCLKD
I2SMCLKD
GND
+12V
+5V
+3V3
I2C_SCL
I2C_SDA
RESERVED7
CLK
HSTX0
HSTX1
HSTX2
HSTX3
HSTX4
HSTX5
HSTX6
HSTX7
I2S_SDIN
I2S_SDOUT
I2S_BCLK
I2S_WCLK
I2S_MCLK
SLOT_AUDIO
SLOT_VIDEO
SLOT_FUNC0
SLOT_FUNC1
PRESENT
HAS_AUDIO
HAS_VIDEO
GP0
GP1
GP2
GP3
GP4
GP5
GP6
GP7
RESERVED0
RESERVED1
RESERVED2
RESERVED3
RESERVED4
RESERVED5
RESERVED6
R805
To enable/disable the slot function, we provide an optional resistor that placed to enable the function
Management Controller
MOD_A0
MOD_A1
MOD_A2
PRESENT
A0
A1
A2
IN0
IN1
MEAS_+3V3
MEAS_+5V
MEAS_+12V
OUT0
OUT1
OUT2
RESET
POWER_ON
MOD_CLK_EN
MOD_RESET
File: mgmt_ctrl.kicad_sch
MAIN_+12V
MAIN_+5V
MAIN_+3V3
R813
TODO
F801
F802
F803
Q802
PMOS
Q803
PMOS
Q804
PMOS
Q801
NMOS
POWER_ON
GATE
TODO: Add stabilizing caps here
Power_500mA
MOD_+12V
MOD_+5V
MOD_+3V3
R814
R816
R818
MEAS_+12V
MEAS_+5V
MEAS_+3V3
R815
R817
R819
C801
C802
C803
100n
Expansion Gate
IN
OUT
CLK_EN
CLK
Power Indicator
R810
270
D801
GREEN
TP809
TP810
TP811
TP803
TP805
TP807
TP801
TP802
+3V3
These signals must use +3V3 instead of the MOD_+3V3 as they are either backplane local or must always have a bias to a local voltage reference even when the power is off
R804
4K7
PRESENT should be high if no card is plugged in
Each expansion slot provides an additional PicoBlade connector for the optional signals so an internal expansion attached somewhere can provide these additional features if wanted
J801
J803
R806
R812
Bias towards power off
Bias the local reset towards "active", so we're keeping the modules properly reset until the management chip is bootet
These signals must use a power dependent pull up as otherwise we'de violate specs for potentially attached chips as the signal voltage (+3V3) would be larger than MOD_+3V3
R807
R808
I²C requires pull-ups
Title: Expansion Port
Ashet Technologies
Rev:
Id: 8/28
This sheet contains all relevant components related to a single expansion port.
This includes the pinout, debug facilities, test points and the wiring of the management controller.
Sheet: /Module Slot 7/
File: module_slot.kicad_sch
Size: A4
Date:
KiCad E.D.A. 9.0.5

Global/Local Reset Merger

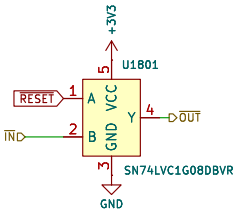

Clock Gate/Buffer

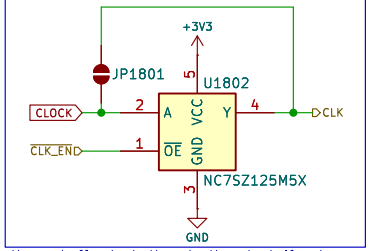

Use a buffer to both gate the clock if not required, but also prevent the any card from doing something bad to our global clock signal

Title: Clock and Reset Gate	**Rev:**
Ashet Technologies	Id: 18/28

This sheet contains the facilities to provide a locally triggerable $\overline{\text{RESET}}$ signal and a buffered version of the global clock signal

Sheet: /Module Slot 7/Expansion Gate/
File: reset_gate.kicad_sch

Size: A4	Date:	KiCad E.D.A. 9.0.5

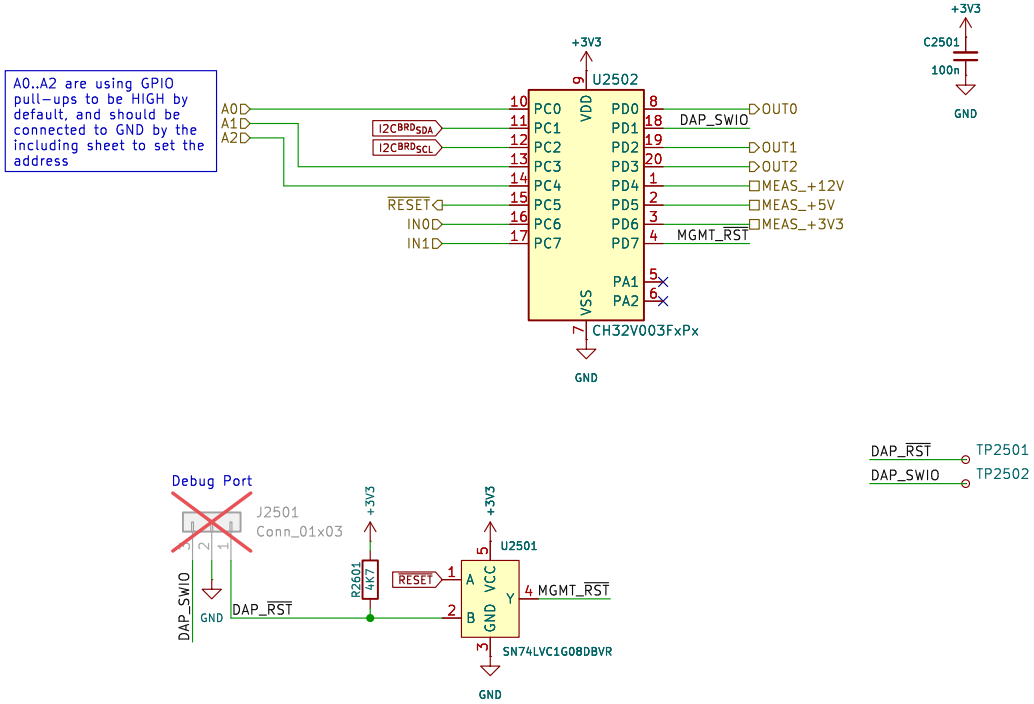

Title: I²C Power & Reset Management Controller

Ashet Technologies

Rev:

Id: 28/28

This sheet contains a standardized wiring of an I²C controlled MCU which allows triggering a local reset and control a hand full of outputs and inputs

Sheet: /Module Slot 7/Management Controller/

File: mgmt_ctrl.kicad_sch

Size: A4 | Date: | KiCad E.D.A. 9.0.5

1.8V Buck Converter

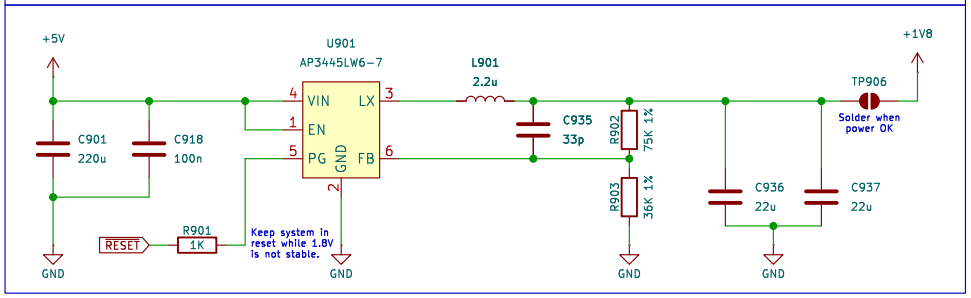

Power Supply Connector

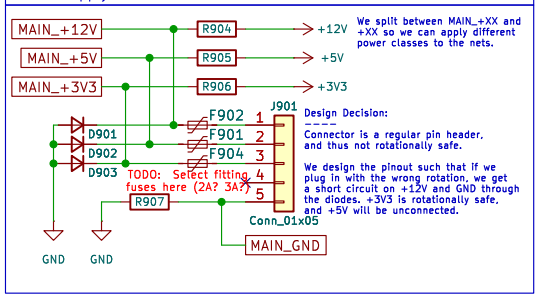

Propeller 2 Power Supply

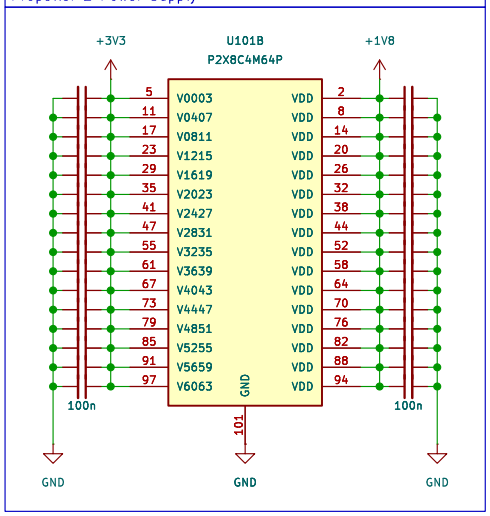

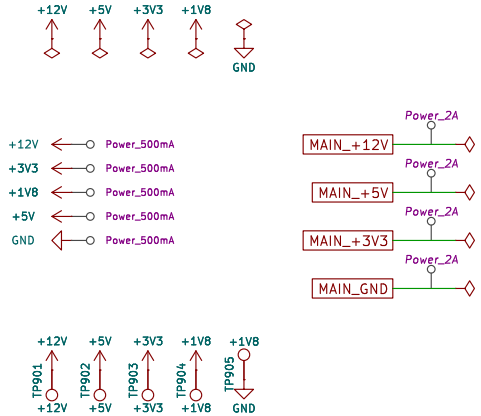

Title: Power Management	**Rev:**
Ashet Technologies	Id: 9/28

This sheet contains all parts related to system-wide power management.

Sheet: /Power/
File: power.kicad_sch

Size: A4 | Date: | KiCad E.D.A. 9.0.5

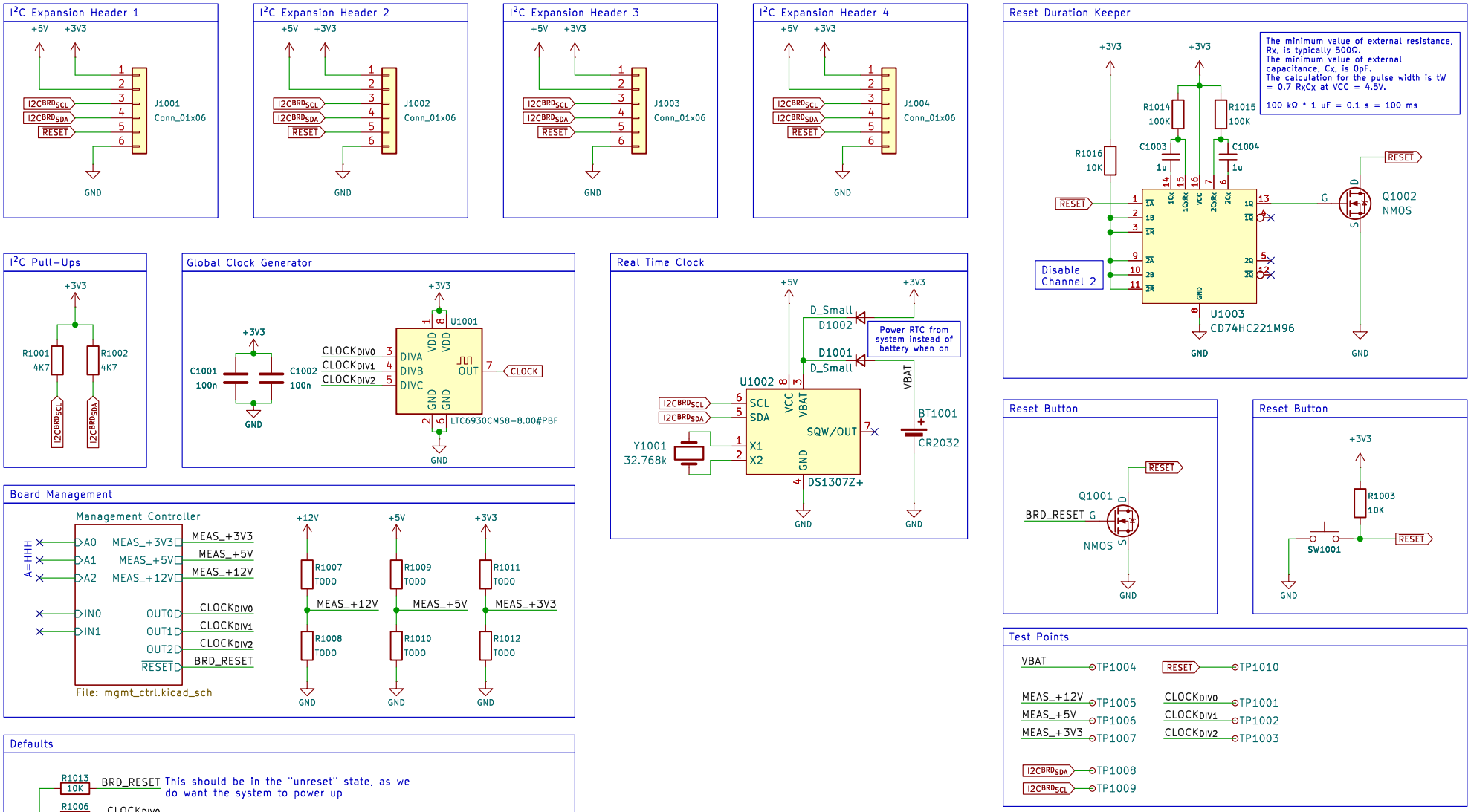
I²C Expansion Header 1
+5V
+3V3
I2CBRDSCL
I2CBRDSDA
RESET
J1001
Conn_01x06
GND
I²C Expansion Header 2
J1002
I²C Expansion Header 3
J1003
I²C Expansion Header 4
J1004
Reset Duration Keeper
The minimum value of external resistance, Rx, is typically 500Ω.
The minimum value of external capacitance, Cx, is 0pF.
The calculation for the pulse width is tW = 0.7 RxCx at VCC = 4.5V.
100 kΩ * 1 uF = 0.1 s = 100 ms
R1014
100K
R1015
100K
R1016
10K
C1003
1u
C1004
1u
Disable Channel 2
U1003
CD74HC221M96
Q1002
NMOS
I²C Pull-Ups
R1001
4K7
R1002
4K7
Global Clock Generator
C1001
100n
C1002
100n
U1001
CLOCKDIV0
CLOCKDIV1
CLOCKDIV2
DIVA
DIVB
DIVC
VDD
GND
OUT
CLOCK
LTC6930CMS8-8.00#PBF
Real Time Clock
D_Small
D1002
D1001
Power RTC from system instead of battery when on
U1002
SCL
SDA
X1
X2
VCC
VBAT
SQW/OUT
Y1001
32.768k
BT1001
CR2032
DS1307Z+
Reset Button
Q1001
BRD_RESET
NMOS
Reset Button
R1003
10K
SW1001
Board Management
Management Controller
A=HHH
A0
A1
A2
IN0
IN1
MEAS_+3V3
MEAS_+5V
MEAS_+12V
OUT0
OUT1
OUT2
RESET
BRD_RESET
File: mgmt_ctrl.kicad_sch
+12V
R1007
TODO
R1008
TODO
R1009
R1010
R1011
R1012
Test Points
VBAT
TP1004
MEAS_+12V
TP1005
MEAS_+5V
TP1006
MEAS_+3V3
TP1007
TP1008
TP1009
TP1010
TP1001
TP1002
TP1003
Defaults
R1013
10K
R1006
R1005
R1004
This should be in the "unreset" state, as we do want the system to power up
Default clock divisor is 1
Title:
Ashet Technologies
Rev:
Id: 10/28
This sheet contains all backplane-builtin features that are not expansion ports.
Sheet: /Builtins/
File: builtins.kicad_sch
Size: A4
Date:
KiCad E.D.A. 9.0.5

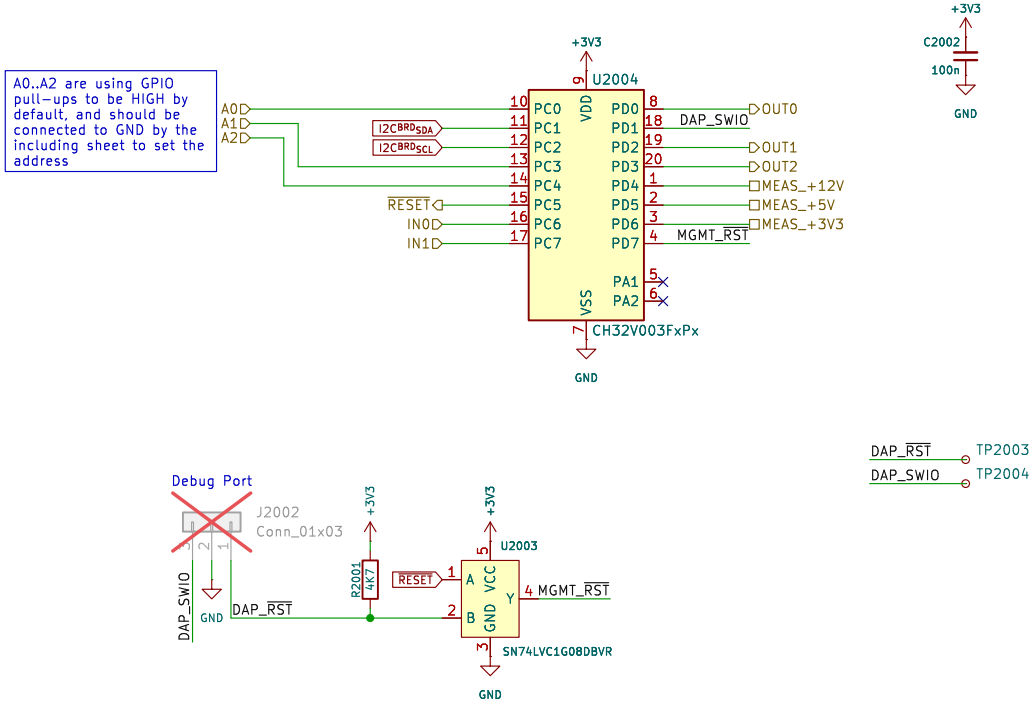

Title: I²C Power & Reset Management Controller

Ashet Technologies

Rev:

Id: 20/28

This sheet contains a standardized wiring of an I²C controlled MCU which allows triggering a local reset and control a hand full of outputs and inputs

Sheet: /Builtins/Management Controller/

File: mgmt_ctrl.kicad_sch

Size: A4 | Date: | KiCad E.D.A. 9.0.5

Global/Local Reset Merger

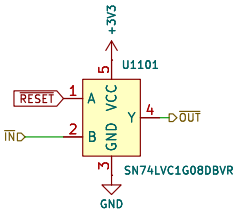

Clock Gate/Buffer

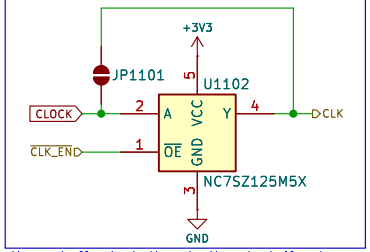

Use a buffer to both gate the clock if not required, but also prevent the any card from doing something bad to our global clock signal

Title: Clock and Reset Gate	**Rev:**
Ashet Technologies	Id: 11/28

This sheet contains the facilities to provide a locally triggerable $\overline{\text{RESET}}$ signal and a buffered version of the global clock signal

Sheet: /Expansion Gate/
File: reset_gate.kicad_sch

Size: A4	Date:	KiCad E.D.A. 9.0.5

We're adding a 500mA polyfuse here to keep safe from faulty USB devices killing our power supply.

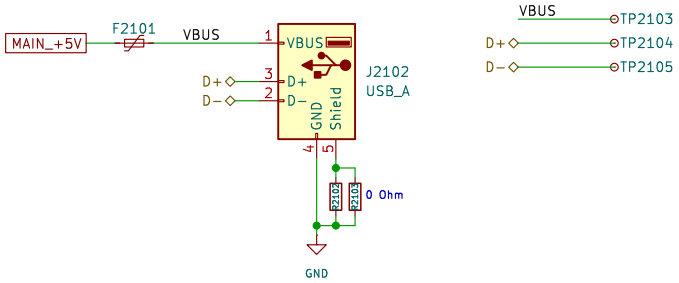

Title:	Rev:
Ashet Technologies	Id: 21/28

This sheet implements a single USB A connector that can be used for internal expansions.

Sheet: /USB A Socket 1/
File: usb_socket.kicad_sch

Size: A4	Date:	KiCad E.D.A. 9.0.5

We're adding a 500mA polyfuse here to keep safe from faulty USB devices killing our power supply.

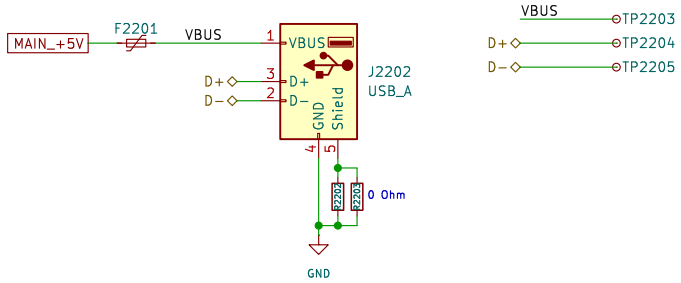

Title:	Rev:
Ashet Technologies	Id: 27/28

This sheet implements a single USB A connector that can be used for internal expansions.

Sheet: /USB A Socket 2/
File: usb_socket.kicad_sch

Size: A4	Date:	KiCad E.D.A. 9.0.5