NO.	REVISION	WP NO.	BY	CH	SUP	APPROVED	DATE
0	ISSUED PER ECN 7725	2064	MS	JM	LM	M. SIBILIA	05-03-2016
1	REVISED PER ECN 7922	2064	YM	LM	LM	N. ALLEN	04-14-2017

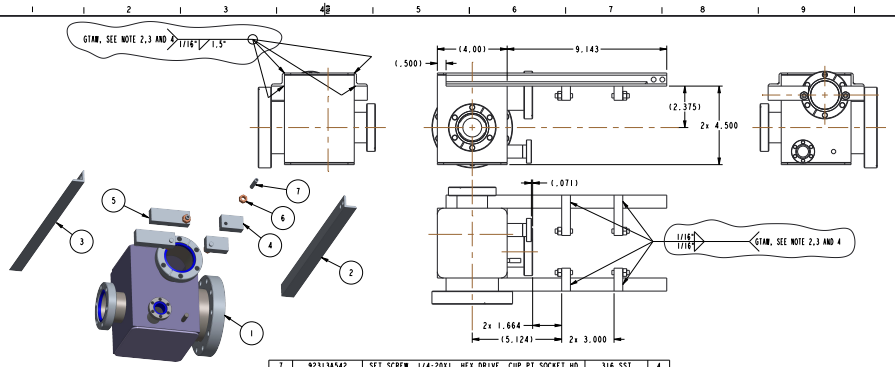

ITEM NO.	DRAWING NO	NOMENCLATURE OR DESCRIPTION	MATERIAL	QTY REQD
7	92313A542	SET SCREW, 1/4-20X1, HEX DRIVE, CUP PT,SOCKET HD	316 SST	4
6	150258	1/4-20 UNC-2B HEX NUT	18-8 SS	4
5	E-9D11462-10	CLEVIS STOP, LONG	316 SS/STL	2
4	E-9D11462-9	CLEVIS STOP, SHORT	316 SS/STL	2
3	E-9D11462-8	MOTOR STRUT, TYPE 2	316 SS/STL	1
2	E-9D11462-7	MOTOR STRUT, TYPE 1	316 SS/STL	1
1	E-9D11462-08	CRANK BOX WELDMENT ASSEMBLY	304 SS/STL	1
-	E-9D11462-03	CRANK BODY SUPPORT WELDMENT ASS'Y	--	--

PARTS LIST

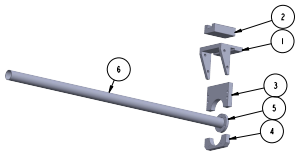

ITEM NO.	DRAWING NO	NOMENCLATURE OR DESCRIPTION	MATERIAL	QTY REQD
6	E-9D11462-29	THERMIONICS TRANSLATOR TUBE	--	1
5	E-9D11462-28	THERMIONICS TRANSLATOR CF FLANGE	--	1
4	E-9D11462-27	THERMIONICS TRANSLATOR CF FLANGE, SMALL SUPPORT	--	1
3	E-9D11462-26	THERMIONICS TRANSLATOR CF FLANGE, LARGE SUPPORT	--	1
2	E-9D11462-25	THERMIONICS TRANSLATOR GUIDE RAIL SLED	--	1
1	E-9D11462-24	THERMIONICS TRANSLATOR SUPPORT BRACKET	--	1
-	E-9D11462-02	SLIDE AND SHAFT ASSEMBLY	--	--

PARTS LIST

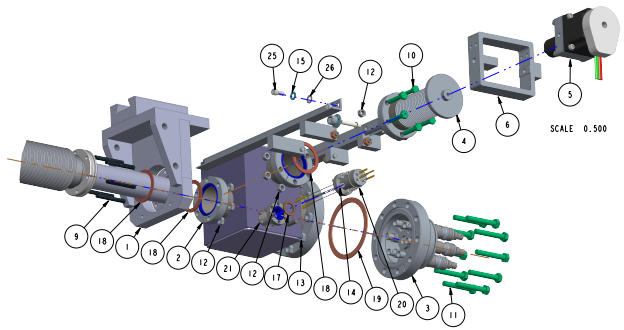

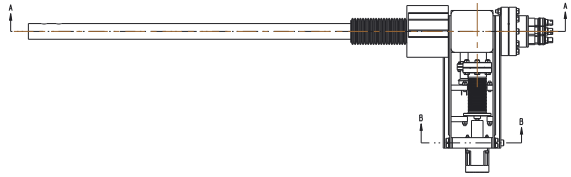

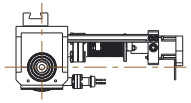

ITEM NO.	DRAWING NO	NOMENCLATURE OR DESCRIPTION	MATERIAL	QTY REQD
27	N5151338	3/8 FLAT WASHER (S.A.E.)	316 S/S	2
26	N5151317	1/4 (NOM) FLAT WASHER (.266 ID X .50 OD X .040 THK)	316 S/S	4
25	N5150719	1/4-20 UNC x 1/2 LG HEX SOC HD CAP SCREW	316-SS	4
24	E-9D11461-04A	BELLOWS ASSEMBLY (THERMIONICS)	--	1
23	92196A618	3/8-16 UNC-2A x 3/8 LG HEX SOCKET HD CAP SCREW - MMC #92196A618 OR EQ.	18-8 SS/STL	2
22	90334A119	SHIM, 1/4" ID, 3/8" OD, .020" THICK - MMC #90334A119 OR EQ.	PTFE	2
21	90205A309	#8-32 UNF-2B NARROW HEX NUT - MMC #90205A309 OR EQ.	316 SS/STL	6
20	9312009	1-1/3" CF ELEC. FEEDTHROUGH, THERMOCOUPLE, TC FDT K 2 PR MC DS (MDC #9312009)	--	1
19	191011	4-5/8" GASKET, CF FLANGE (MDC #191011)	OFE COPPER	1
18	191004	2-3/4" CF GASKET, 1.89" OD, 1.45" ID, .08" THK. (MDC #191004)	OFE COPPER	3
17	191000	1-1/3" CF GASKET, .838" OD, .640" ID, .08" THK. (MDC #191000)	OFE COPPER	1
16	151339	3/8 SPLIT LOCK WASHER	316 S/S	2
15	151333	1/4 SPLIT LOCK WASHER	316 S/S	4
14	150702	# 8-32 UNC x 3/4 LG HEX SOC HD CAP SCREW	STN STL	6
13	150273	5/16-24 UNF-2B HEX NUT	316 S/S	10
12	150272	1/4-28 UNF-2B HEX NUT	316 S/S	12
11	150082	5/16-24 UNF-2A x 2" LG HEX HEAD BOLT	STN STL	10
10	150071	1/4-28 UNF-2A x 1 1/4 LG HEX HEAD BOLT	STN STL	6
9	E-9D11462-30	SHAFT, 1/4"-28 UNF-2A THREAD, 2" LONG	316 SS/STL	6
8	E-9D11462-18	1/4" DIA ROD, 1.377" LG, PTFE-FILLED ACETAL RESIN ROD, (MMC #8579K12)	DELRIN/PTFE	1
7	E-9D11462-17	1/4" DIA ROD, .877" LG, PTFE-FILLED ACETAL RESIN ROD, (MMC #8579K12)	DELRIN/PTFE	1
6	E-9D11462-11	MOTOR SUPPORT	6061 ALUM	1
5	E-9D11462-06	DRIVE SHAFT ASSEMBLY	--	1
4	E-9D11462-05	BELLOWS ASSEMBLY	--	1
3	E-9D11462-04	FEEDTHROUGH ASSEMBLY	--	1
2	E-9D11462-03	CRANK BODY SUPPORT WELDMENT ASS'Y	--	1
1	E-9D11462-02	SLIDE AND SHAFT ASSEMBLY	--	1
-	E-9D11462-01	FEEDTHROUGH AND MOTOR ASSEMBLY	--	--

PARTS LIST

NSX-E-9D11462

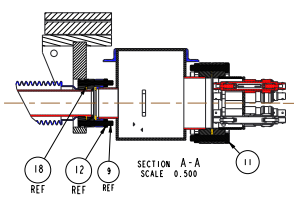

SECTION A-A
SCALE 0.500

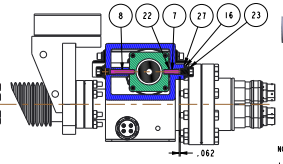

SECTION B-B
SCALE 0.500

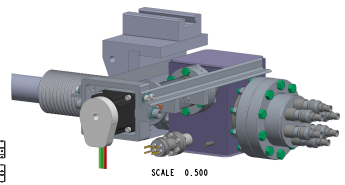

SCALE 0.500

NOTES:

1. REMOVE ALL SHARP CORNERS AND BURRS.
2. WELDING SHALL BE PERFORMED IN ACCORDANCE WITH ASME B31.3
3. WELD INSPECTION SHALL BE PERFORMED IN ACCORDANCE WITH THE ACCEPTANCE CRITERIA OF B31.3, CATEGORY D.
4. MAGNETIC PERMEABILITY OF S/S PARTS USING SEVERN GAUGE SHALL NOT EXCEED THE FOLLOWING:
   BASE MATERIAL: 1.05 mu
   MACHINED: 1.4 mu
   WELDED: 2.0 mu
5. HELIUM LEAK TEST EACH SUBASSEMBLY TO 10 -9 TORR LITER/SEC.

GENERAL NOTES

1. PPPL APPROVED DRAWINGS TAKE PRECEDENCE OVER MODEL DIMENSIONS.
2. WHEN MODELS ARE PROVIDED, VENDOR MUST VERIFY THAT MODEL DIMENSIONS CONFORM WITH PPPL APPROVED DRAWINGS PRIOR TO FABRICATION.

MAGNETIC PERMEABILITY REQUIREMENT (SEE NOTES)

YES	X	NO

RELEASE LEVEL: Fabrication
DWG VERSION NO: 12

RELEASED FOR FABRICATION / INSTALLATION
PPPL Drafting: Lewis Morris

WELDING ENGINEER
APPROVAL: Michael J. Ono DATE:

COMPUTER GENERATED DRAWING MANUAL CHANGES NOT PERMITTED
DO NOT SCALE INFORMATION BY SCALING DRAWING
SCALE:
NEXT ASSEMBLY: E-9D11464

CENTRAL FILES:
UNLESS OTHERWISE SPECIFIED
DIMENSIONS ARE IN INCHES
MACHINE SURFACES 63
BREAK SHARP EDGES .005/.020
TOLERANCES NON-CUMULATIVE
DECIMAL: .XX ±.010 .XXX ±.005 .XXXX ±.0005
FRACTIONS ±1/32 ±1/64 ±1/128
ANGLES ±0°-15' ±0°-10' ±0°-5'

PRINCETON PLASMA PHYSICS LABORATORY
PRINCETON UNIVERSITY
NATIONAL SPHERICAL TORUS EXPERIMENT
DIAGNOSTIC SYSTEMS
BAY L, UPPER MID-PLANE, FUSION PRODUCTS
FEEDTHROUGH AND MOTOR ASSEMBLY

DIV: MECH. ENG. DATE: 4/20/2016
ENG: M. SIBILIA
DSN: M. SIBILIA
CHK: J. MITCHELL
APPROVED: M. SIBILIA

E-9D11462
SHEET 1 OF 3 REV 1

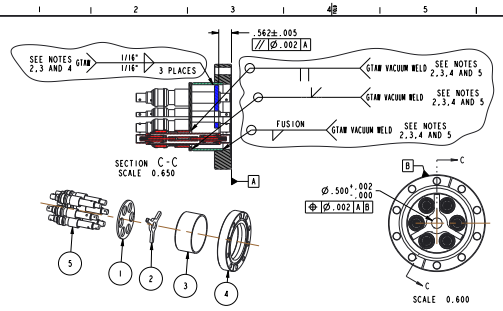

ITEM NO.	DRAWING NO	NOMENCLATURE OR DESCRIPTION	MATERIAL	QTY REQD
5	9211003	COAXIAL FEEDTHROUGH, FLOATING SHIELD, DOUBLE END WELDABLE, (MDC #9211003)	--	6
4	110024	4-5/8" CF FLANGE, 3" TUBING, CLEARANCE HOLE (MDC #110024)	304 SS/STL	1
3	E-9011462-15	FEEDTHROUGH TUBE	316 SS/STL	1
2	E-9011462-14	FEEDTHROUGH SUPPORT	316 SS/STL	1
1	E-9011462-13	FEEDTHROUGH PLATE	316 SS/STL	1
-	E-9011462-04	FEEDTHROUGH ASSEMBLY	--	--

PARTS LIST

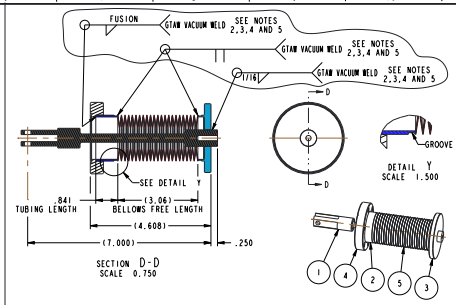

ITEM NO.	DRAWING NO	NOMENCLATURE OR DESCRIPTION	MATERIAL	QTY REQD
5	471004	1-3/4" OD, WELDED BELLOWS, 3/4" ID, 2.5" STROKE (MDC #471004)	304 SS/STL	1
4	110052	2-3/4" CF FLANGE, THRU HOLE, FIXED (MDC #110052)	304 SS/STL	1
3	E-9011462-21	CLEVIS CAP	316 SS/STL	1
2	E-9011462-19	TUBING, 1-3/4" OD, .065 WALL, SEAMLESS, .841 LG.	316 SS/STL	1
1	E-9011462-16	CLEVIS, THREADED	316 SS/STL	1
-	E-9011462-05	BELLOWS ASSEMBLY	--	--

PARTS LIST

NO.	REVISION	WP NO.	BY	CH	SUP	APPROVED	DATE

SEE SHEET 1

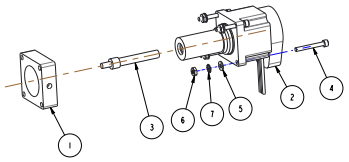

ITEM NO.	DRAWING NO	NOMENCLATURE OR DESCRIPTION	MATERIAL	QTY REQD
7	90375A011	#10 NOM WASHER, EXTERNAL TOOTH - MMC #90375A011 OR EQ	316 SS/STL	4
6	90257A411	#10-32UNC-2B HEX NUT - MMC #90257A411 OR EQ	316 SS/STL	4
5	90107A011	#10 FLAT WASHER 7/16 OD X .040 THK - McM #90107A011 OR EQ	316 S/S	4
4	15080	# 10-32 UNF x 1 1/2 LG HEX SOC HD CAP SCREW	STN STL	4
3	E-9011462-23	AMETEK PLUNGER	--	1
2	E-9011462-22	AMETEK ACTUATOR/ENCODER	--	1
1	E-9011462-17	ACTUATOR MOUNTING BRACKET (6061-ALUM)		1
-	E-9011462-06	DRIVE SHAFT ASSEMBLY	--	--

PARTS LIST

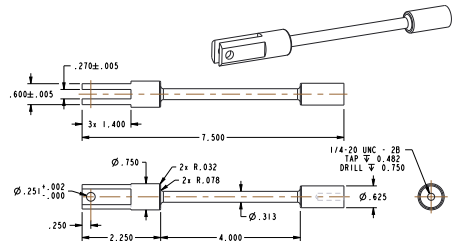

PART NUMBER	DESCRIPTION	MATERIAL
E-9011462-16	CLEVIS, THREADED	316 SS/STL

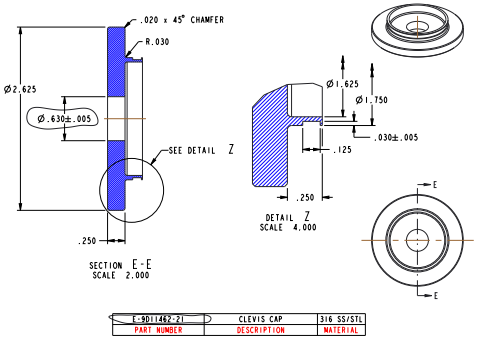

PART NUMBER	DESCRIPTION	MATERIAL
E-9011462-21	CLEVIS CAP	316 SS/STL

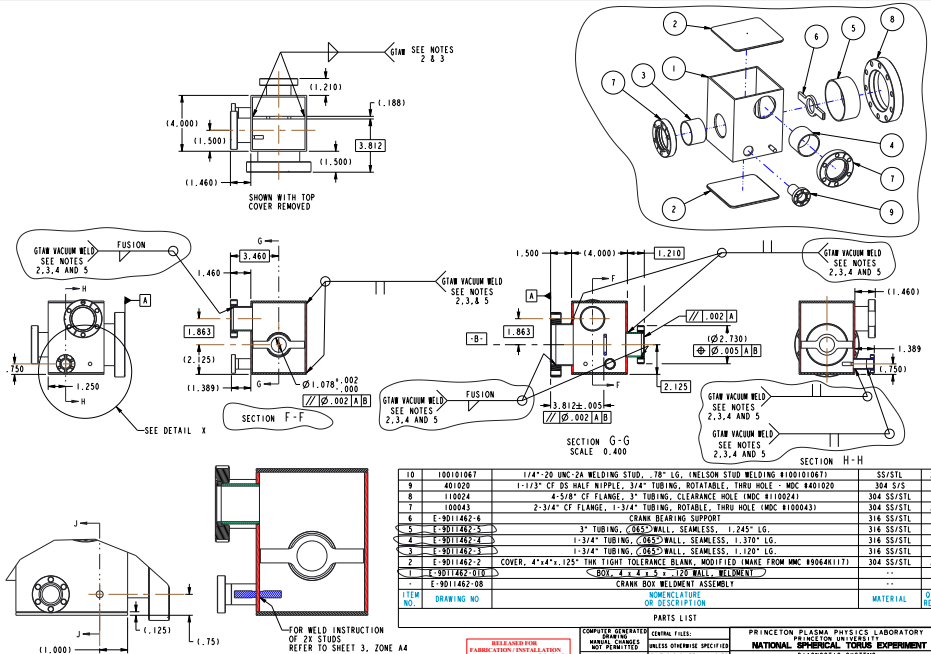

ITEM NO.	DRAWING NO	NOMENCLATURE OR DESCRIPTION	MATERIAL	QTY REQD
10	100101067	1/4"-20 UNC-2A WELDING STUD, .78" LG, (NELSON STUD WELDING #100101067)	SS/STL	2
9	401020	1-1/3" CF DS HALF NIPPLE, 3/4" TUBING, ROTATABLE, THRU HOLE - MDC #401020	304 S/S	1
8	110024	4-5/8" CF FLANGE, 3" TUBING, CLEARANCE HOLE (MDC #110024)	304 SS/STL	1
7	100043	2-3/4" CF FLANGE, 1-3/4" TUBING, ROTABLE, THRU HOLE (MDC #100043)	304 SS/STL	2
6	E-9011462-6	CRANK BEARING SUPPORT	316 SS/STL	1
5	E-9011462-5	3" TUBING, (.065") WALL, SEAMLESS, 1.245" LG.	316 SS/STL	1
4	E-9011462-4	1-3/4" TUBING, (.065") WALL, SEAMLESS, 1.370" LG.	316 SS/STL	1
3	E-9011462-3	1-3/4" TUBING, (.065") WALL, SEAMLESS, 1.120" LG.	316 SS/STL	1
2	E-9011462-2	COVER, 4"x4"x.125" THK TIGHT TOLERANCE BLANK, MODIFIED (MAKE FROM MMC #9064K117)	304 SS/STL	2
1	E-9011462-01B	BOX, 4 x 4 x 5 , .120 WALL, WELDMENT	--	1
-	E-9011462-08	CRANK BOX WELDMENT ASSEMBLY	--	1
ITEM NO.	DRAWING NO	NOMENCLATURE OR DESCRIPTION	MATERIAL	QTY REQD

PARTS LIST

N574-E-9011462

GENERAL NOTES

1. PPPL APPROVED DRAWINGS TAKE PRECEDENCE OVER MODEL DIMENSIONS.
2. WHEN MODELS ARE PROVIDED, VENDOR MUST VERIFY THAT MODEL DIMENSIONS CONFORM WITH PPPL APPROVED DRAWINGS PRIOR TO FABRICATION.

MAGNETIC PERMEABILITY REQUIREMENT (SEE NOTES)

YES X NO

FOR NOTES AND BILL OF MATERIAL SEE SHEET 1

RELEASED FOR FABRICATION / INSTALLATION
2015-06-09 Lewis Morris

RELEASE LEVEL: Fabrication
DWG VERSION NO: 12

WELDING ENGINEER
APPVD: Jeff Heiser DATE: 2015/7/7

COMPUTER GENERATED DRAWING MANUAL CHANGES NOT PERMITTED
Pro E
DO NOT SCALE INFORMATION BY SCALING DRAWING
SCALE:
NEXT ASSEMBLY
E-9011464

CENTRAL FILES:
UNLESS OTHERWISE SPECIFIED
DIMENSIONS ARE IN INCHES
MACHINE SURFACES
BREAK SHARP EDGES .005/.020
TOLERANCES NON-CUMULATIVE
DECIMAL: INCH FRACTIONS
.X ±.100 1/2"-1/4" ±1/16
.XX ±.010 1/4"-1/8" ±1/32
.XXX ±.005 1/8"-1/16" ±1/64
ANGULAR ±0°-15' UNDER 1/16" ±1/128

PRINCETON PLASMA PHYSICS LABORATORY
PRINCETON UNIVERSITY
NATIONAL SPHERICAL TORUS EXPERIMENT
DIAGNOSTIC SYSTEMS
BAY L, UPPER MID-PLANE, FUSION PRODUCTS
FEEDTHROUGH AND MOTOR ASSEMBLY

DIV: MECH. ENG. DATE: 4/20/2016
ENG: M. SIBILIA
DSN: M. SIBILIA
CHK: J. MITCHELL
APPROVED
M. SIBILIA

E-9011462

SHEET 2 OF 3 REV 1

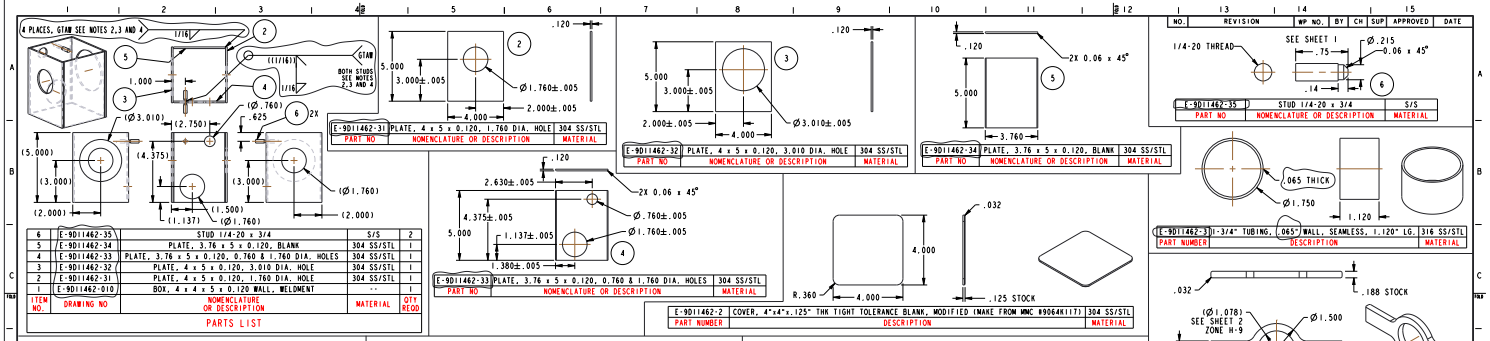

ITEM NO.	DRAWING NO	NOMENCLATURE OR DESCRIPTION	MATERIAL	QTY REQD
6	E-9D11462-35	STUD 1/4-20 x 3/4	S/S	2
5	E-9D11462-34	PLATE, 3.76 x 5 x 0.120, BLANK	304 SS/STL	1
4	E-9D11462-33	PLATE, 3.76 x 5 x 0.120, 0.760 & 1.760 DIA. HOLES	304 SS/STL	1
3	E-9D11462-32	PLATE, 4 x 5 x 0.120, 3.010 DIA. HOLE	304 SS/STL	1
2	E-9D11462-31	PLATE, 4 x 5 x 0.120, 1.760 DIA. HOLE	304 SS/STL	1
1	E-9D11462-010	BOX, 4 x 4 x 5 x 0.120 WALL, WELDMENT		1

PARTS LIST

PART NO	NOMENCLATURE OR DESCRIPTION	MATERIAL
E-9D11462-31	PLATE, 4 x 5 x 0.120, 1.760 DIA. HOLE	304 SS/STL
E-9D11462-32	PLATE, 4 x 5 x 0.120, 3.010 DIA. HOLE	304 SS/STL
E-9D11462-34	PLATE, 3.76 x 5 x 0.120, BLANK	304 SS/STL
E-9D11462-33	PLATE, 3.76 x 5 x 0.120, 0.760 & 1.760 DIA. HOLES	304 SS/STL
E-9D11462-2	COVER, 4"x4"x.125" THK TIGHT TOLERANCE BLANK, MODIFIED (MAKE FROM MMC #9064K111)	304 SS/STL
E-9D11462-35	STUD 1/4-20 x 3/4	S/S
E-9D11462-31	1-3/4" TUBING, .065" WALL, SEAMLESS, 1.120" LG.	316 SS/STL
E-9D11462-4	1-3/4" TUBING, .065" WALL, SEAMLESS, 1.370" LG.	316 SS/STL
E-9D11462-5	3" TUBING, .065" WALL, SEAMLESS, 1.245" LG.	316 SS/STL
E-9D11462-19	TUBING, 1-3/4" OD, .065 WALL, SEAMLESS, .841 LG.	316 SS/STL
E-9D11462-6	CRANK BEARING SUPPORT	316 SS/STL
E-9D11462-7	MOTOR STRUT, TYPE 1	316 SS/STL
E-9D11462-8	MOTOR STRUT, TYPE 2	316 SS/STL
E-9D11462-9	CLEVIS STOP, SHORT	316 SS/STL
E-9D11462-10	CLEVIS STOP, LONG	316 SS/STL
E-9D11462-11	MOTOR SUPPORT	6061 ALUM
E-9D11462-12	ACTUATOR MOUNTING BRACKET	6061 ALUM
E-9D11462-13	FEEDTHROUGH PLATE	316 SS/STL
E-9D11462-14	FEEDTHROUGH SUPPORT	316 SS/STL
E-9D11462-15	FEEDTHROUGH TUBE	316 SS/STL
E-9D11462-27	THERMIONICS TRANSLATOR CF FLANGE, SMALL SUPPORT	--

GENERAL NOTES

1. PPPL APPROVED DRAWINGS TAKE PRECEDENCE OVER MODEL DIMENSIONS.
2. WHEN MODELS ARE PROVIDED, VENDOR MUST VERIFY THAT MODEL DIMENSIONS CONFORM WITH PPPL APPROVED DRAWINGS PRIOR TO FABRICATION.

MAGNETIC PERMEABILITY REQUIREMENT (SEE NOTES)

YES X NO

RELEASED FOR FABRICATION / INSTALLATION

RELEASE LEVEL: Fabrication

DWG VERSION NO: 10

NEXT ASSEMBLY: E-9D11464

PRINCETON PLASMA PHYSICS LABORATORY
PRINCETON UNIVERSITY
NATIONAL SPHERICAL TORUS EXPERIMENT
DIAGNOSTIC SYSTEMS
BAY L UPPER MID-PLANE, FUSION PRODUCTS FEEDTHROUGH AND MOTOR ASSEMBLY

E-9D11462

SHEET 3 OF 3 REV 1

NSTX-E-9D11462