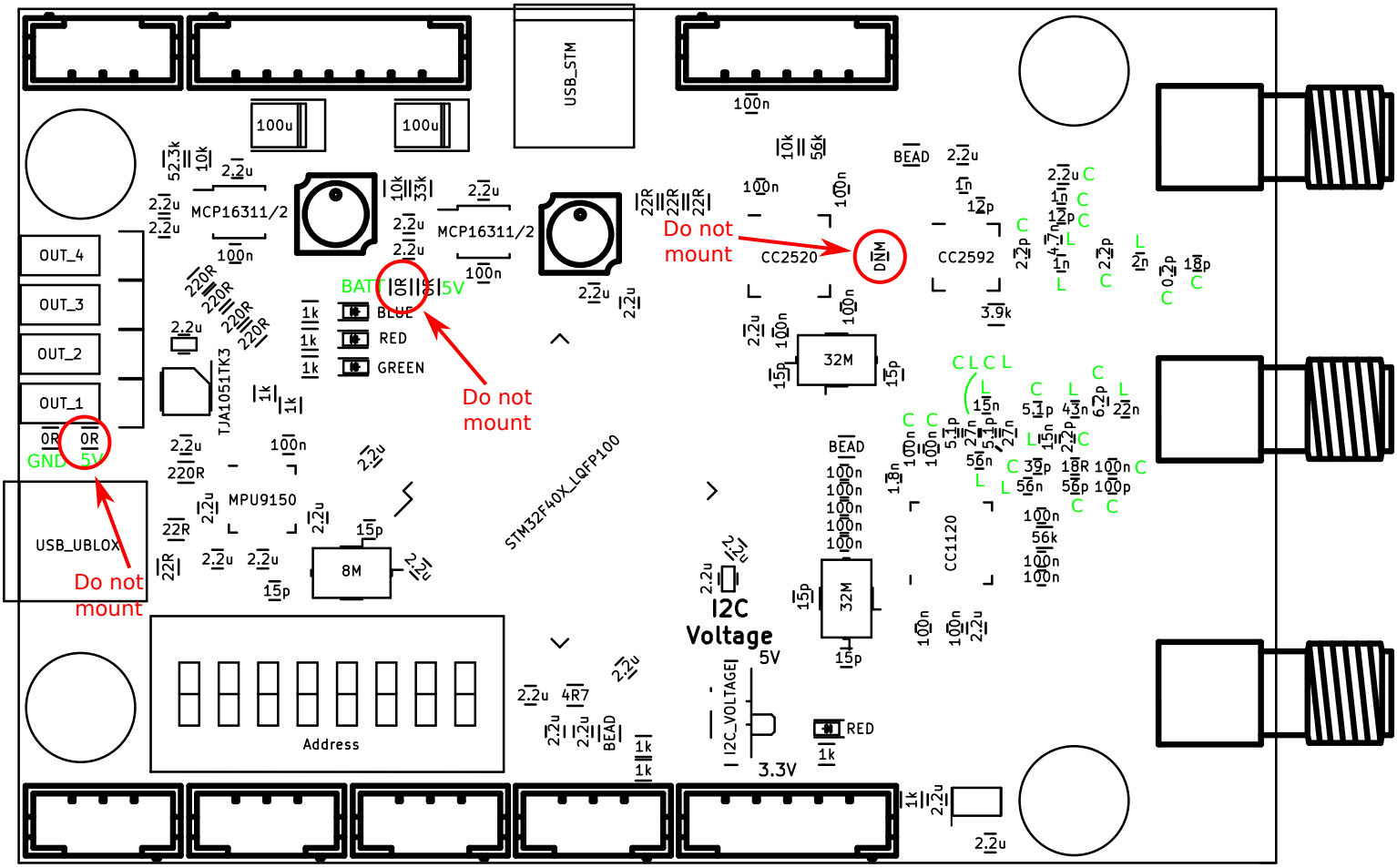
USB_STM
100u
100u
MCP16311/2
MCP16311/2
OUT_4
OUT_3
OUT_2
OUT_1
0R
0R
GND
5V
USB_UBLOX
Do not mount
BAT
5V
BLUE
RED
GREEN
Do not mount
TJA1051TK3
MPU9150
8M
STM32F40X_LQFP100
Do not mount
CC2520
CC2592
32M
32M
CC1120
I2C Voltage
5V
3.3V
I2C_VOLTAGE
RED
Address

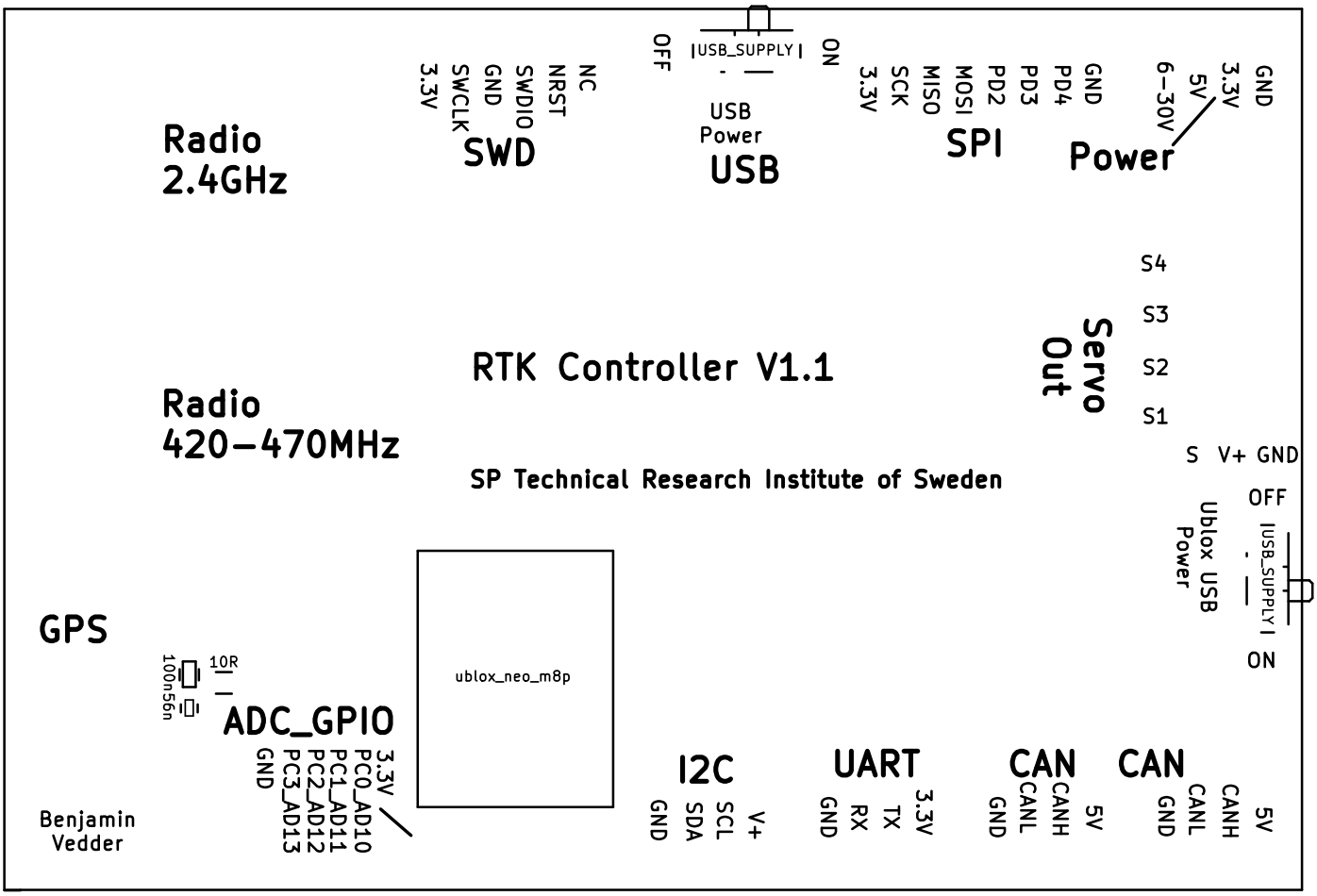
Radio 2.4GHz
SWD
3.3V
SWCLK
GND
SWDIO
NRST
NC
USB_SUPPLY
OFF
ON
USB Power
USB
3.3V
SCK
MISO
MOSI
PD2
PD3
PD4
GND
SPI
6-30V
5V
3.3V
GND
Power
RTK Controller V1.1
Servo Out
S4
S3
S2
S1
Radio 420-470MHz
SP Technical Research Institute of Sweden
S V+ GND
OFF
Ublox USB Power
USB_SUPPLY
ON
GPS
10R
100n56n
ADC_GPIO
GND
PC3_AD13
PC2_AD12
PC1_AD11
PC0_AD10
3.3V
ublox_neo_m8p
I2C
GND
SDA
SCL
V+
UART
GND
RX
TX
3.3V
CAN
GND
CANL
CANH
5V
CAN
GND
CANL
CANH
5V
Benjamin Vedder