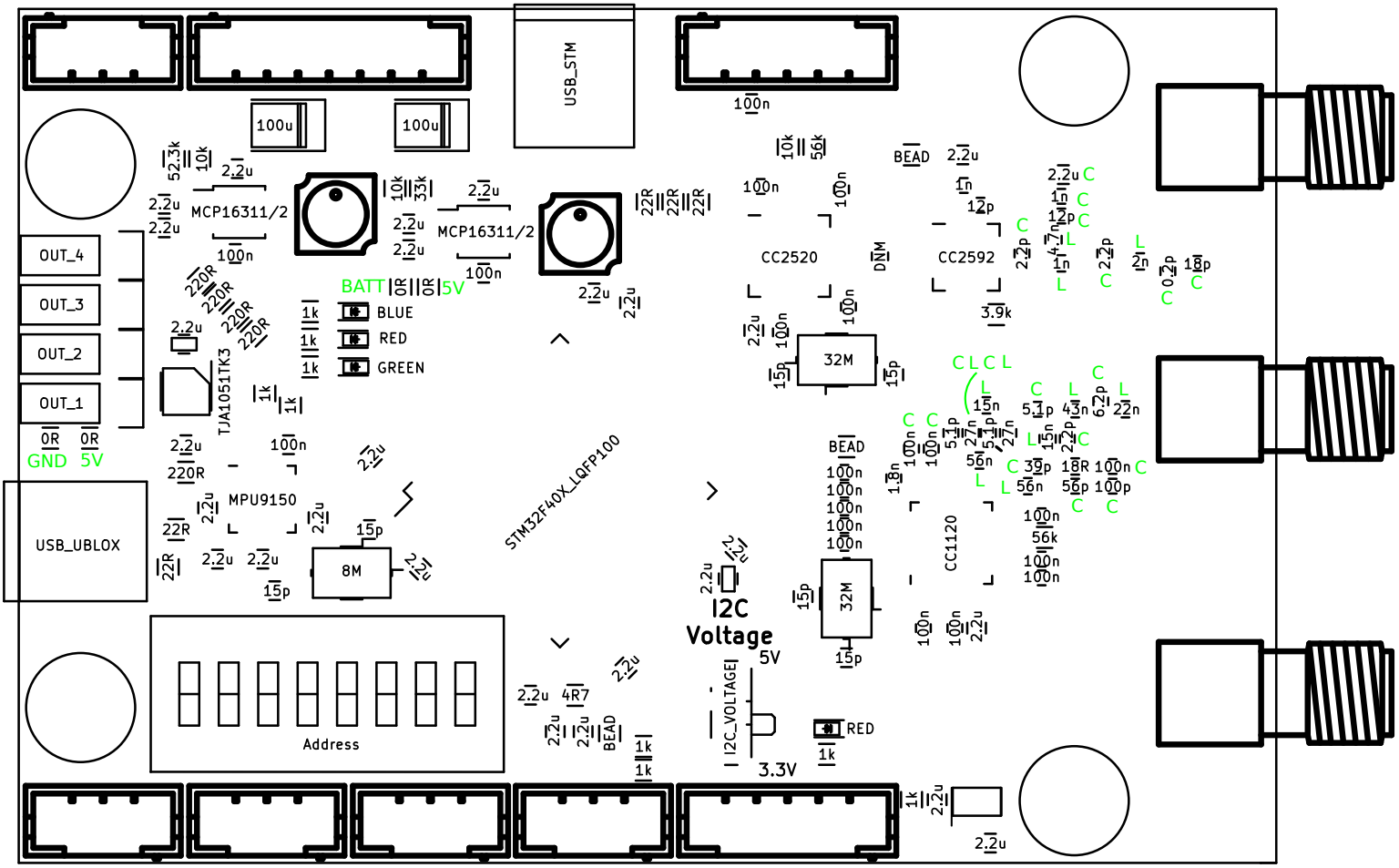
USB_STM
100u
100u
MCP16311/2
MCP16311/2
OUT_4
OUT_3
OUT_2
OUT_1
0R 0R
GND 5V
TJA1051TK3
BATT
5V
BLUE
RED
GREEN
MPU9150
8M
USB_UBLOX
STM32F40X_LQFP100
Address
CC2520
CC2592
32M
32M
CC1120
I2C
Voltage
5V
I2C_VOLTAGE
3.3V
RED
BEAD

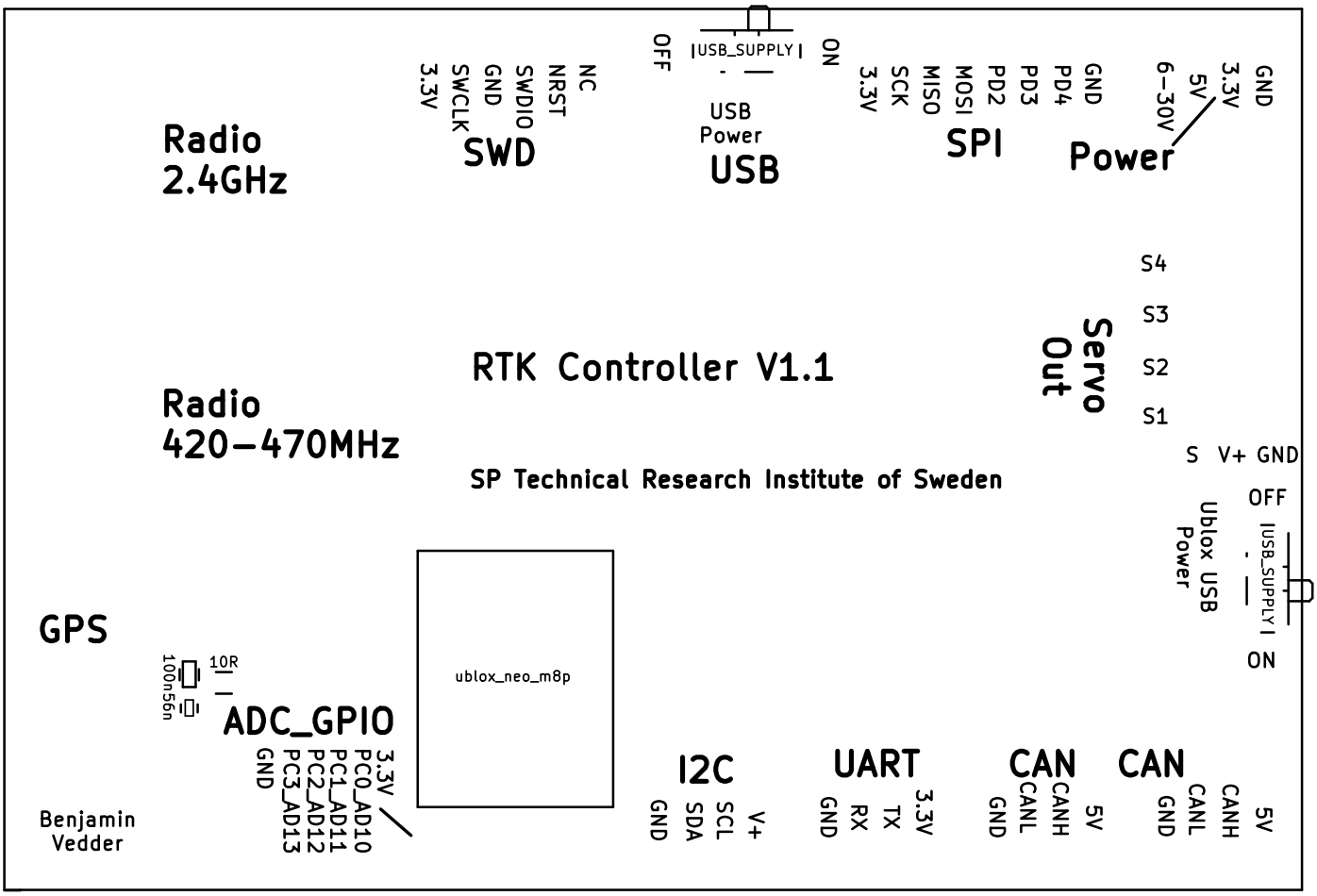
Radio
2.4GHz
SWD
3.3V
SWCLK
GND
SWDIO
NRST
NC
USB
Power
USB_SUPPLY
OFF
ON
SPI
3.3V
SCK
MISO
MOSI
PD2
PD3
PD4
GND
Power
6-30V
5V
3.3V
GND
RTK Controller V1.1
Servo
Out
S4
S3
S2
S1
Radio
420-470MHz
SP Technical Research Institute of Sweden
S V+ GND
OFF
Ublox USB
Power
USB_SUPPLY
ON
GPS
10R
100n56n
ADC_GPIO
3.3V
PC0_AD10
PC1_AD11
PC2_AD12
PC3_AD13
GND
ublox_neo_m8p
I2C
V+
SCL
SDA
GND
UART
3.3V
TX
RX
GND
CAN
5V
CANH
CANL
GND
CAN
5V
CANH
CANL
GND
Benjamin
Vedder