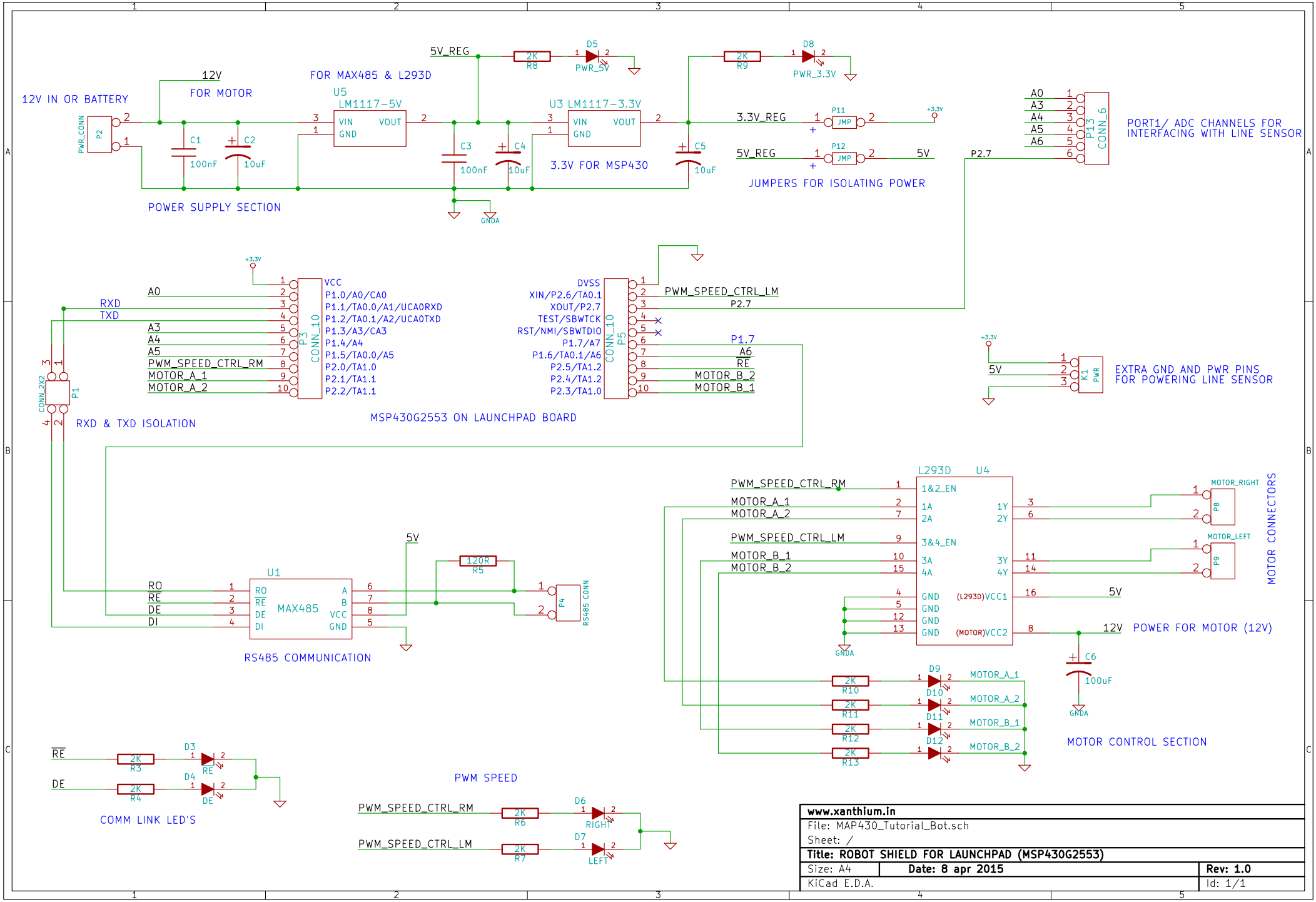

www.xanthium.in		
File: MAP430_Tutorial_Bot.sch		
Sheet: /		
Title: ROBOT SHIELD FOR LAUNCHPAD (MSP430G2553)		
Size: A4	**Date: 8 apr 2015**	**Rev: 1.0**
KiCad E.D.A.		Id: 1/1