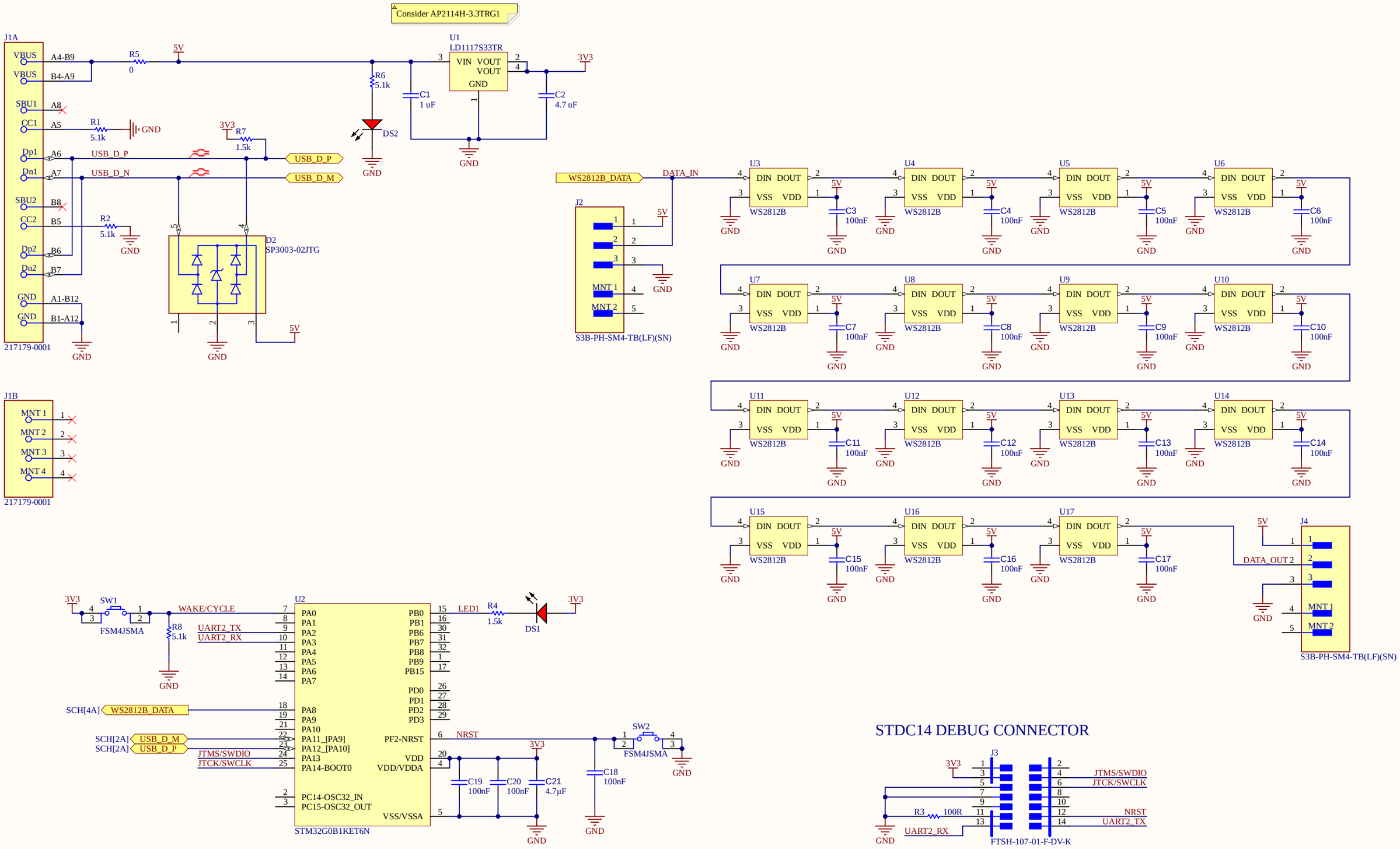

Title		
Size A3	Number	Revision
Date: 12/20/2024		Sheet of
File: SCH.SchDoc		Drawn By: