GSM [Global System for Mobile]

Page No.
Date

→ 1] GSM stands for Global system for Mobile. It is the 2nd generation digital cellular technology used for mobile voice & data services. That it is a 2G Network.

2] GSM uses TDMA [Time division Multiple Access] technique to provide voice & text based services over mobile network

3] Presently GSM supports more than one billion mobile subscribers in more than 210 countries.

4] GSM uses 4 diff. frequency bands :- 1] 850 MHz 3] 1800 MHz
2] 900 MHz 4] 1900 MHz

5] GSM uses 4 diff. size of cells :-
a] Macro :- In this size of cell, Base station antenna is installed
b] Micro :- Antenna height is less than the avg. roof level
c] Pico :- Small cells' diameter of few meters
d] Umbrella :- It covers the shadowed (fill the gaps betn cells)

6] Features / characteristics of GSM :-
1] Use of SIM
2] privacy of Data
3] supports international roaming.
4] clear voice clarity

7] GSM services :- 1] Teleservices
2] Data services / Bearer services
3] Supplementary services.

1] Teleservices :- a] These services allows subscriber to use terminal equipment functions for communication with other subscribers.
b] It supports emergency calling & FAX services.

8] Security in GSM ⟹ 1] Access control & authentication
2] Confidentiality
3] Anonymity

7] 2) Data services / Bearer services :-

a] These services allow subscriber to transmit appropriate signals across user network interfaces.

b] In this service data can be transmits in 2 modes :-

a] Transparent Mode :- GSM N/W provides standard channel coding method for user data

b] Non-transparent Mode :- GSM N/W provides special coding methods based on particular data interface.

3) Supplementary services :-

a) These services supplements the teleservices & are offered with basic teleservices.

b) They are digital in nature.

c) Supplementary services Eg. :- 1] call conferencing
2] call barring
3] call waiting
4] call forwarding.

8) GSM is divided into 3 subsystem

1] BSS → Base station subsystem
2] NSS → Network & switching subsystem.
3] OSS → operational sub-system.

*] MS (Mobile station) is also a subsystem, but generally considered as an integral part of BSS.

MS is divided in 2 parts :- 1] Mobile Terminal
2] SIM (Subscriber Identity Module)

*] BSS [Base station subsystem] :- It manages all the signaling & traffic betn MS & NSS.

It consists :- 1] BTS ⟹ [Base Transceiver station]
2] BSC ⟹ [Base station controller]

GSM Time Hierarchy → 1) FCCH burst 2) SCH burst 3) RACH burst 4) Dummy burst

Page No.
Date

*] NSS [Network switching subsystem].

→ 1) BSS Forwards the signals to NSS.

2) The main unit of NSS is MSC [Mobile switching center]

MSC Having Five components :- 1] VLR [Visitor Location Register]
2] HLR [Home Location Register]
3] AUC [Authentication center]
4] EIR [Equipment Identity Register]
5] PSTN [public switched Telephone Network]

*] OMC :- OMC stands for [operation maintenance center]

*] Interfaces of GSM → Three subsystems BSS, NSS & OSS are connected with each other via interfaces. There are also 3 interfaces.

1] Um / Air interface :- Air interface betn MS & BTS
2] Abis :- Interconnection betn BTS & BSC
3] A :- Interconnection betn BSS to MSC

• GSM security :- 1] GSM offers several security using confidential information stored in the AUC & in individual SIM.

2] The SIM stores personal secret data & is protected with a pin against unauthorized use.

• Adv. of GSM :- 1] compatibility 2] security 3] Efficient use of bandwidth 4) wide range of features

• Disadv. of GSM :- 1] limited coverage 2] Network congestion 3] Data transfer speed 4] Limited capacity.

Syllabus Topic : GSM – System Architecture, GSM Radio Subsystem

2.21 GSM ARCHITECTURE

GQ. Draw neat diagram of GSM Architecture and explain the function of each block in it.

GQ. Explain with a neat block diagram the architecture of GSM.

Refer Fig. 2.21.1.

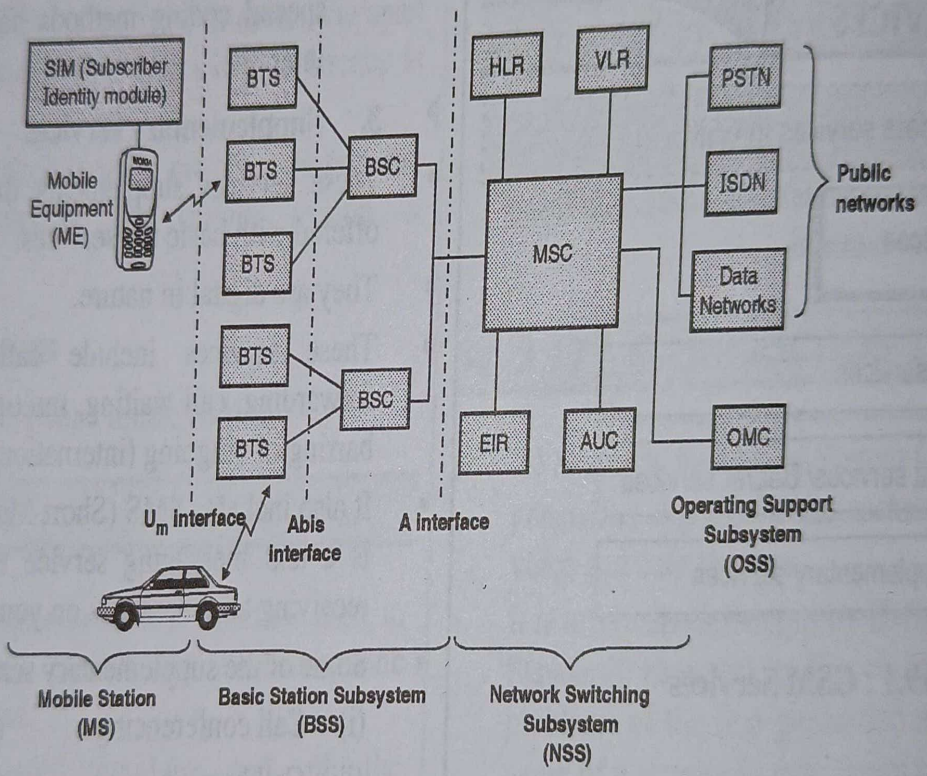

BTS : Base Transceiver Station
BSC : Base Station Controller
HLR : Home Location Register
VLR : Visitor Location Register
MSC : Mobile Switching Centre
EIR : Equipment Identity Register
AUC : Authentication Center
OMC : Operation Maintenance Center

Fig. 2.21.1 : GSM Architecture

Suppose there are 3 Mobile stations which are connected with the tower and that tower is connected to BTS through TRX, then further connected to BSC and MSC. Let's understand the functionality of different components.

1. MS : MS stands for Mobile System. MS comprises user equipment and software needed for communication with a mobile network. Mobile Station (MS) = Mobile Equipment(ME) + Subscriber Identity Module (SIM). Now, these mobile stations are connected to tower and that tower connected with BTS through TRX. TRX is a transceiver which comprises transmitter and receiver. Transceiver has two performance of sending and receiving.

2. BTS : BTS stands for Base Transceiver Station which facilitates wireless communication between user equipment and a network. Every tower has BTS.

3. BSC : BSC stands for Base Station Controller. BSC has multiple BTS. You can consider the BSC as a local exchange of your area which has multiple towers and multiple towers have BTS.

4. MSC : MSC stands for Mobile Switching Center. MSC is associated with communication switching functions such as call setup, call release and routing. Call tracing, call forwarding all functions are performed at the MSC level. MSC is having further components like VLR, HLR, AUC, EIR and PSTN.

- **VLR :** VLR stands for Visitor Location Register. VLR is a database which contains the exact location of all mobile subscribers currently present in the service area of MSC. If you are going from one state to another state then your entry is marked into the database of VLR.
- **HLR :** HLR stands for Home Location Register. HLR is a database containing pertinent data regarding subscribers authorized to use a GSM network.. If you purchase SIM card from in the HLR. HLR is like a home which contains all data like your ID proof, which plan you are taking, which caller tune you are using etc.
- **AUC :** AUC stands for Authentication Center. AUC authenticates the mobile subscriber that wants to connect in the network.
- **EIR :** EIR stands for Equipment Identity Register. EIR is a database that keeps the record of all allowed or banned in the network. If you are banned in the network then you can't enter the network, and you can't make the calls.
- **PSTN :** PSTN stands for Public Switched Telephone Network. PSTN connects with MSC. PSTN originally a network of fixed line analog telephone systems. Now almost entirely digital in its core network and includes mobile and other networks as well as fixed telephones. The earlier landline phones which places at our home is nothing but PSTN.

5.OMC : OMC stands for Operation Maintenance Center. OMC monitor and maintain the performance of each MS, BSC and MSC within a GSM system.

Three subsystem BSS, NSS and OSS are connected with each other via some interfaces. Total three interfaces are there:

1. **Air Interface :** Air interface is also known as UM interface. Interface between MS and BTS is called as UM interface because it is mobile analog to the U interface of ISDN.
2. **Abis Interface :** It is a BSS internal interface linking with BTS and BSC.
3. **A interface :** It provides communication between BSS and MSC.

GPRS [General packet Radio service]

1] It stands for General packet Radio service.
2] It is the modified version of GSM architecture.
3] When integrated with GSM significantly improves & simplifies internet access.
4] GPRS offers end-to-end packet switched data transfer services.

5] GPRS ⇒ GSM + data
[In the GPRS all the software components are need to be upgraded.]

6] GPRS provides packet service radio access for mobile users as well as TDMF users also.

7] GPRS network can offer data speeds of 14.4 kbps to 171.2 kbps.

8] GPRS devices can be connected very fast & provides the feel of "always on". Hence GPRS devices are called "always connected"

9] GPRS allows services like :- 1] Unicast
2] Multicast
3] Broadcast.

10] Features of GPRS :- 1] GPRS supports demand based time slot allocation.
2] GPRS is designed to support bursty applications like email, traffic telematics, telemetry & web browsing.

11] GPRS has 3 types of Data services :- 1] WAP [Wireless Application protocol]
2] SMS [Short msg service]
3] MMS [Multimedia Messaging service]

12] GPRS has 4 types of security services :- 1] Authentication
2] access control
3] User info. confidentiality
4] User identity security.

13] For voice call the GPRS system uses the GSM architecture. However, for data packet transmission GPRS includes a new set of network nodes called as GPRS support Node [GSN]

14] The main function of GSN is to route & deliever the data packets between the packet Data Network (PDN) & mobile stations.

15] GPRS supports 2 supports Nodes
a] SGSN [Serving GSN] {Serving GPRS support Node}
b] GGSN [Gateway GSN] {Gateway GPRS support node}

GPRS Architecture :-

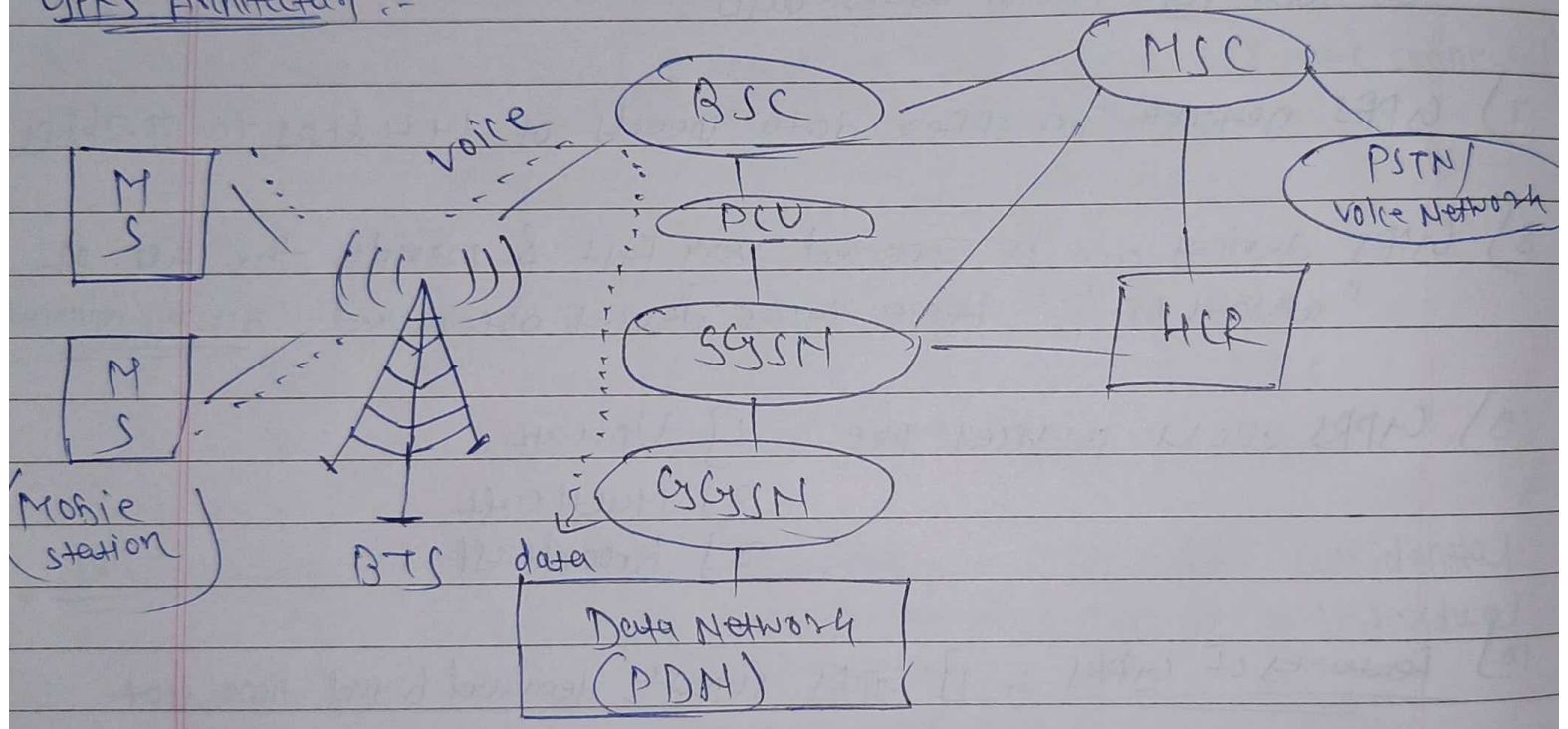

(Fig. GPRS Network)

• GPRS elements

→ 1) Base station subsystem (BSS)
→ 2) Home location Register (HLR)
→ 3) Mobile station (MS)
→ 4) BTS (Base Transceiver station)
→ 5) BSC [Base station controller]
→ 6) PCU [Packet control unit]

Page No.
Date

→ 7) SGSN [Serving GPRS Support Node]
→ 8) GGSN [Gateway GPRS Support Node]
→ 9) PDN [Packet Data Network]
→ 10) MSC [Mobile Switching centre]
→ 11) PSTN [Public switched Telephone Network]

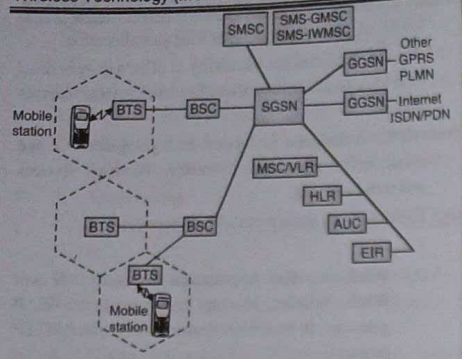

Fig. 2.33.1 : GPRS architecture

AUC : Authentication Center
BTS : Base Transceiver Station
HLR : Home Location Register
GGSN : Gateway GPRS support Node
MSC : Mobile Switching Center
PLMN : Public Land Mobile Network
SMS : GMSC : SMS Gateway MSC
SGSN : Serving GPRS Support node
BSC: Base Station Controller
EIR : Equipment Identity Register
VLR : Visitor Location Register
ISDN : Integrated System Digital Network
PDN : Packet Data Network
SMSC : Short Message Service Center
SMS - IWMSC : SMS interworking MSC

In addition to the new GPRS components (SGSN and GGSN), some of the existing GSM elements must be enhanced to support packet data.

They are :

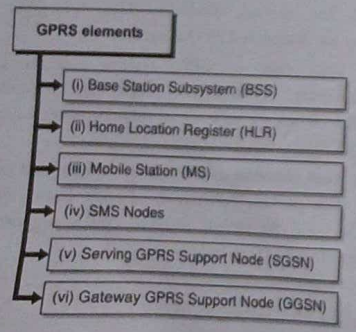

Fig. 2.33.2 : GPRS Elements

(i) Base Station Subsystem (BSS)

In order recognize and send packet data, the base station subsystem requires new functionalities that upgrade the BTS such that it supports transmitting the user data to the SGSN and between BTS and MS over radio network.

(ii) Home Location Register (HLR)

For registering the GPRS user profiles and providing response to the GPRS queries originating from GSNs in regards to the user profiles the HLR also needs to be upgraded or enhanced.

(iii) Mobile Station (MS)

The mobile station or the mobile phone for GPRS is different from that of GSM.

(iv) SMS Nodes

SGSN support SMS transmission. The SMS-GMSCs and SMS-IWMSCs are enhanced. For efficient co-ordination of GPRS and non-GPRS services the MSC/VLR also needs to be upgraded.

(v) Serving GPRS Support Node (SGSN)

- It functions similar to the GSM-MSC. The functions that GSM-MSC supports for voice are supported by the SGSN for packet data.
- They comprise functions like :
  (a) Packet switching,
  (b) Data transfer
  (c) Routing
  (d) Mobility management
  (e) Logical link management
  (f) Authentication and security
  (g) Billing /charging functions.
  (h) Registration of new mobile subscribers and track of their location for a given service area.
- The SGSN location register is responsible for storing the location information and user profiles of all GPRS users that are registered with SGSN.
- For acquiring the profile data of the subscribers it sends queries to the Home Location Register (HLR)
- SGSN is connected to the base station with frame Relay.

(vi) Gateway GPRS Support Node (GGSN)

- A gateway GPRS support node (GGSN) acts as an interface between the external packet data networks and the GPRS backbone network.

- The functions of the GGSN are identical to that of router in a LAN. Functions of GGSN are :
  (a) To maintain the information related to routing for tunnelling the Protocol Data Units (PDUs) to the SGSNs service specific mobile stations.
  (b) To convert the GPRS packets into correct packet data protocol (PDP) format for data networks like IP or X.25.
  (c) Perform authentication
  (d) Perform billing / charging
- PDP sends these packets to the **PDN (Packet Data Network)**. The packets received from PDN are converted to the GSM addresses of the destination user.
- The readdressed packets are sent to the SGSN in-charge of it.
- The GGSN needs to store the address of current SGSN and also the user address along with his/her location in the location register.

2.33.2 GPRS Logical Channels

GQ. State and explain different logical channels used in GPRS.

- GPRS supports multi slot operation in which 8 time slots can be used by single MS. As the packet traffic is usually asymmetric, different resource allocation is necessary for uplink and downlink.
- The channel allocation is limited only for duration of the packet transmission or reception. Hence capacity on demand is implemented in GPRS channel allocation. The channels are shared among the GSM and GPRS networks.
- Refer Fig. 2.33.3. It shows logical channel structure of GPRS.

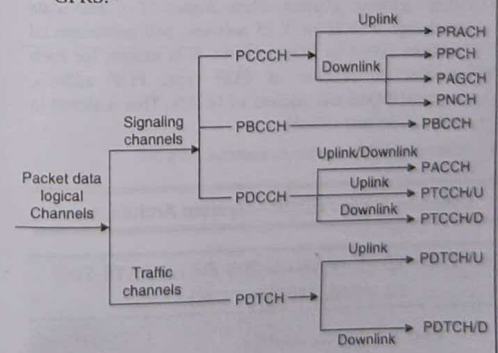

PDCH: packet data channel
PDTCH: packet data traffic channel
PCCCH: packet common control channel
PBCCH: packet broadcast control channel
PDCCH: packet dedicated control channel
PRACH: packet random access channel
PPCH: packet paging channel
PAGCH: packet access grant channel
PNCH: packet notification channel
PACCH: packet associated control channel
PTCCH/U: packet timing advance control channel for uplink
PTCCH/D : packet timing advance control channel for downlink

Fig. 2.33.3 : Logical channel structure of GPRS

1. **PDTCH/u and PDTCH/D :** It carriers user traffic to and from Ms to BSS i.e. on uplink as well as downlink. One or more PDTCHs can be assigned to GPRS terminal.
2. **PBCCH :** It is unidirectional and carries signal from BSS to MS. It is used to inform all the MS about the organization of GSM and GPRS network. It is used when MS wants to register on the network. If it is not available the MS will use conventional BCCH or CCCH of GSM network.
3. **PCCCH :** It is common control channel which is divided into
   - PRACH : It carries messages regarding request for traffic channels by MS. It is unidirectional and uplink channel.
   - PAGCH : It is downlink channel. It carries confirmation about traffic channel allocation messages from BSS to MS.
   - PPCH : It is downlink channel. It is used by BS to send paging messages to concerned MS and find the cell site in which the MS is currently located.
   - PNCH : It is downlink channel. It carries information about messages in multicast or group calls.
4. **PACCH :** It carries signalling in both the directions. It is used to send control information associated with the traffic channels used by MS.
5. **PTCCH/U and PTCCH/D :** It is used for adjusting the timing advance of the frame clock. It helps in maintenance of the synchronism.

Module 2

UMTS [Universal Mobile Telecommunication System]

Page No.
Date

1] UMTS stands for - - - - -

2] It supports both circuit switch and packet switch transmission.

3] It is a 3rd Generation of Mobile communication, it means it is a 3G technology..

4] It is co-ordinate to CDMA [code division Multiple access] for grouping spread range.

5] It is the advanced version of previous (GSM) technology.

6) UMTS is being developed for wide area mobile cellular coverage & indoor cordless applications.

7) UMTS air interfaces services had been designed for "always on".

8) Earlier UMTS was called as UMTS Terrestrial Radio Access (UTRA). It was designed to provide high capacity for GSM. Then other competing wideband are merged into a single W-CDMA standard, then now we called is as UMTS.

9] Features of UMTS :- 1] UMTS support data rate upto 2Mbps per user.
2] UMTS provides feature like video conferencing & interactive video & mobile commerce.
3) Always on packet based wireless network.
4) Maximum 350 voice calls supported simultaneously.

10] UMTS has a better spectrum efficiency.

11] The main three blocks of UMTS architecture
1] UE [User Equipment]
2] UTRAN [UMTS Terrestrial Radio Access N/W]
3) CN [Core Network]

2.36.2 UMTS Architecture

GQ. Explain UMTS architecture.

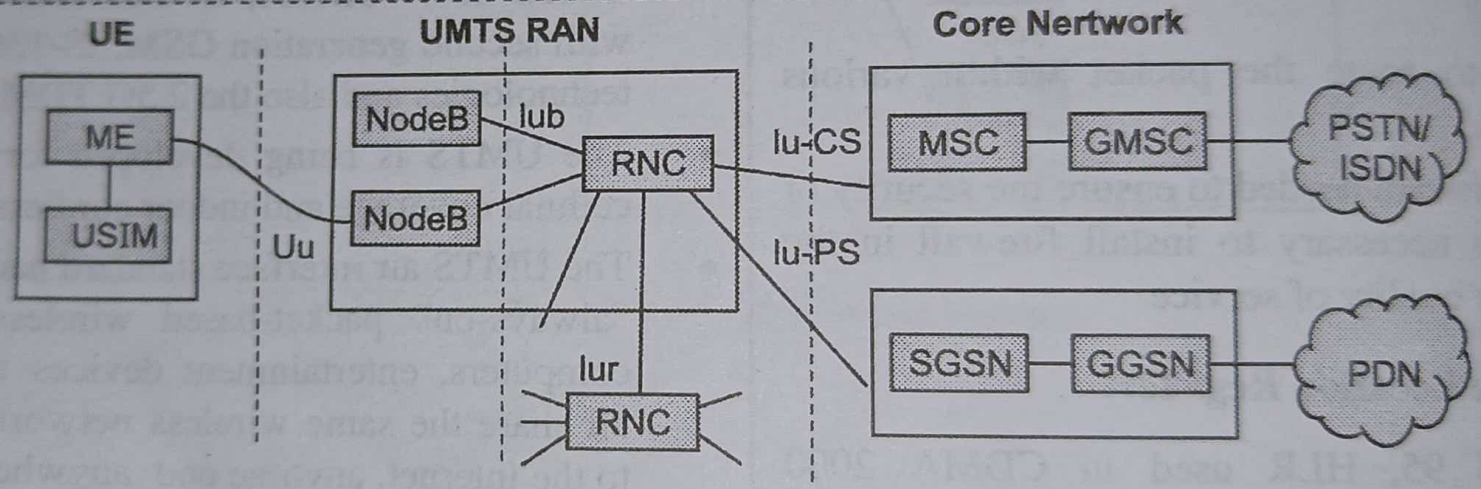

(5B30)**Fig. 2.36.1 : UMTS Architecture**

12) It partially based on 3G technologies while keeping few features of 2G technology [i.e GSM].

* A] UE
B] UTRAN [UMTS Terrestrial Radio Access Network]
⇒ 1) It consists several RNS [Radio Network subsystem]
2) Each RNS is controlled by RNC [Radio N/W controller] & it is also comprises with Node B.

3) RNS comprises :- a] Node B
b] RNC [Radio Network controller]

A) UE
B) UTRAN
C) Core Network.

Task performed by RNC

1) call admission control
2) congestion control
3) Encryption & decryption
4) Multiplexing of signals & protocol conversion
5) Radio source Management
6) Radio bearer setup & release
7) code allocation
8) power control
9) Handover control
10) Management.

- Refer Fig. 2.36.1. It shows UMTS architecture.
- It is partially based on 3G technologies while keeping few features of 2G technology i.e. GSM.
- The main blocks in the architecture are

1. UE (User Equipment)
2. UTRAN (UMTS Terrestrial Radio Access Network)
3. CN (Core network)

1. UE (User Equipment)

- It is subdivided between user equipment and SIM same as that of GSM system.
- It is assigned to the single user. It comprises of all the functions which are needed to access the UMTS network.
- The SIM present here, performs the functions like encryption and authentication of users. It stores all the user related data for UMTS network.
- Generally SIM belongs to the service provider. It consists of microprocessor. This microprocessor is responsible for enhanced program execution environment like USAT, UMTS SIM application toolkit etc.
- The user equipment has all the functions needed for radio transmissions as well as user interfaces.
- UE performs the signal quality measurements, power control upto some extent, spreading and modulation and rate matching functions.
- UE also takes part in radio resource allocation process.
- It also has to take care of mobility management functions.

2. UTRAN (UMTS Terrestrial Radio Access Network)

- Refer Fig. 2.36.2. It shows UTRAN architecture.

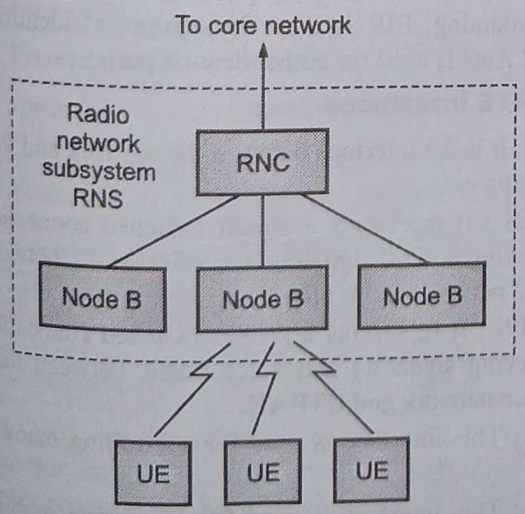

(5B31)**Fig. 2.36.2 : UTRAN Architecture**

- It comprises of several RNS (radio network subsystem). Each RNS is controlled by RNC (radio network controller). It is also comprised of several components called as Node B.
- If we compare with GSM architecture, RNC is analogous to BSC and Node B to that of BTS.
- **RNS comprises of**

a) Node B b) RNC (radio network controller)

a) Node B

- Radio cell is controlled by Node B. This means it actually controls the several antennas which are located in the cell sites.
- UE is connected with the one or more antennas. Node B also takes care of the handovers required.

b) RNC (Radio Network Controller)

- RNC is connected to the CN (core network) with the air interface I_u. It is connected to the node B via air interface I_{ub}.
- Two RNCs are interconnected with radio interface I_{ur}.
- The tasks performed by RNC are

1. Call admission control
2. Congestion control
3. Encryption and decryption
4. Multiplexing of signals and protocol conversion
5. Radio resource management
6. Radio bearer setup and release
7. Code allocation
8. Power control
9. Handover control and RNS relocation
10. Management

1. Call admission control

To keep the interference level low, RNC calculates the traffic intensity. It then decides whether to accept the call or not.

2. Congestion control

RNC allocates bandwidth to each node in the network in cyclic fashion. It also regulates quality of service.

3. Encryption and decryption

RNC encrypts the data incoming from fixed network before transmission and decrypts it before detection.

4. Multiplexing of signals and protocol conversion

The interconnection between RNCs, node Bs and the CN has to be switched to multiplex the various data streams

5. **Radio resource management :** The RNC controls all the radio resources. It is done considering priorities.
6. **Radio bearer setup and release :** RNC sets up, maintains and releases a logical data connection to UE.
7. **Code allocation :** Codes required by CDMA are selected by RNC. These may vary during transmission.
8. **Power control :** RNC keeps an eye on the transmission power based on the interference values from other cell sites. But this is not the tight power control mechanism.
9. **Handover control and RNS relocation :** based on the signal strengths received by node B and UE, RNC decides the handover.
10. **Management :** The RNC provides the information like current load, current traffic, error states etc. to the network operator. This information is needed for management of the network.

3. **Core Network (CN)**

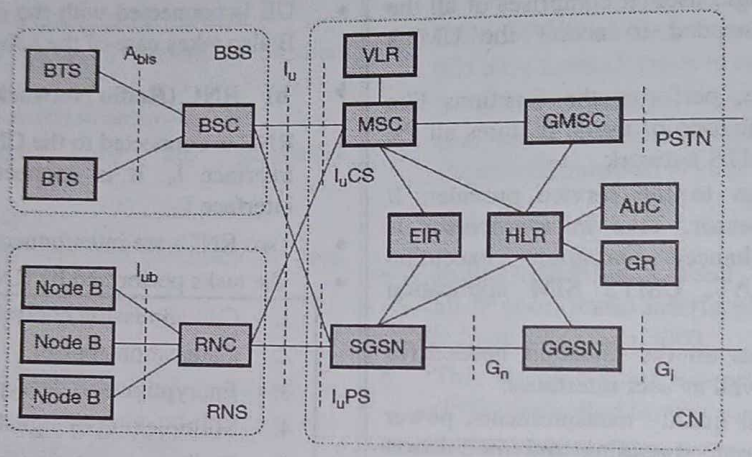

(5B32)**Fig. 2.36.3 : UMTS core network with 3G RNS and 2G BSS**

- The core network is divided in two parts :
  1. CSD (circuit switched domain
  2. PSD (packet switched domain)

1. **CSD (circuit switched domain)**

- It consists of earlier circuit switched services like signalling.
- It has the same blocks as that of GSM architecture like MSC, HLR, VLR etc. They have the same functions also.
- The CSD is connected to RNS via I_u interface and it is known as I_uCS. It is actually the old 2G infrastructure with additional functionalities and features.

2. **PSD (packet switched domain)**

- *It is the part that resembles GPRS network. In GPRS network SGSN (serving GPRS support node) and GGSN (gateway GPRS support node) are present.*
- *These are capable of handling packetized data.*
- *SGSN has the same tasks that of MSC. Only difference is that it is able to handle packets.*
- The SGSN and GGSN are connected to RNS via I_u interface and it known as I_u PS.
- Both the CSD and PSD need databases HLR, VLR, EIR and AuC.
- HLR is used for location updating; VLR is used in case of roaming. EIR is used for equipment identification and AuC is used for authentication purposes.

The UMTS interfaces

(i) **U_u** : It is the interface between the network and the user equipment.

(ii) **I_uCS** : It represents a circuit switched connection for carrying control signaling and voice traffic between the core network and UTRAN.

(iii) **I_u PS** : It represents a packet switched connection for carrying signaling and voice traffic between the core voice network and UTRAN.

(iv) **I_{ub}** : This interface is used for controlling many Node B.

(v) **I_{ur}** : This interface is used for supporting mobility of MSCs. When subscriber moves I_{ur} transfers subscriber data to new RNC as UE moves.

LTE [Long Term Evaluation] ⇒ It is a 4G technology.

Page No.
Date

[TNO refer]

1) It stands for long term Evaluation.

2) In 2004, WCDMA systems were inefficient to provide support for high spectral efficiencies & data rates required for broadband access, then 3GP [Third Generation partnership project] started developing new technology.

3) They developed entirely new data packet networks with MIMO [Multiple Inplet Multiple output], OFDMA and OFDM support. It is a 4G LTE.

4) LTE [4G] technology has better spectrum efficiency, higher bandwidth & better coverage area.

5) LTE supports better mobile broadband. Later releases of LTE are known as LTE advanced.

6) It has switched both voice & data packet switching.

7) It uses FDD / TDD duplexing frame structure.

8) Channel bandwidth is 1MHz, 3MHz, 4MHz, 5MHz, 10MHz, 15MHz & 20MHz.

9) Peak data rates are :- 1) for uplink - 75Mbps
2) for downlink - 300Mbps.

10) Access technology used ⇒ 1) Uplink - SC-FDMA
2) Downlink - OFDMA.

11) The High-level LTE network architecture has three main components :-

A] The User Equipment [UE]

B] The Evolved UMTS Terrestrial Radio access Network [E-UTRAN]

C] The Evolved packet core [EPC].

LTE Architecture :-

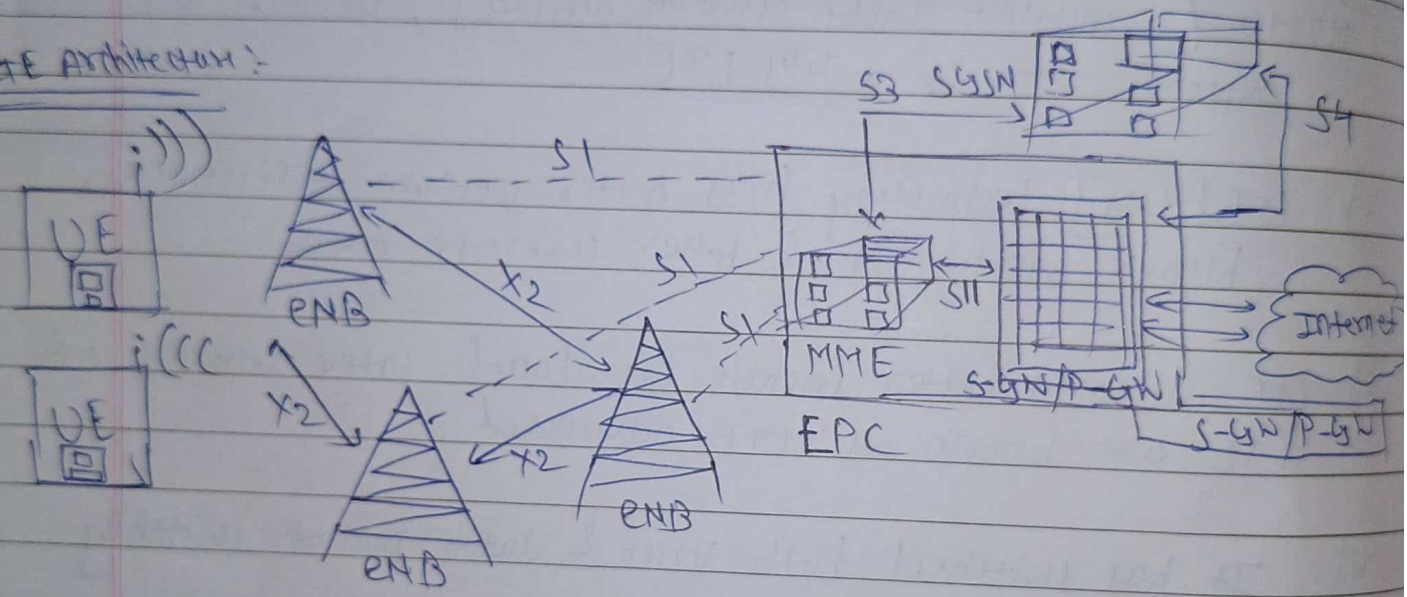

- Interfaces S1 to S11 & X2 are used for reliable packet routing & seamless integration in the network.

- The Main components are :- 1] User equipment [UE]
  2] Evolved nodeB [eNB]
  3] Evolved packet core [EPC]
  4] Mobility Management entity [MME]
  5] serving gateway [S-GW]
  6] PDN gateway [P-GW].

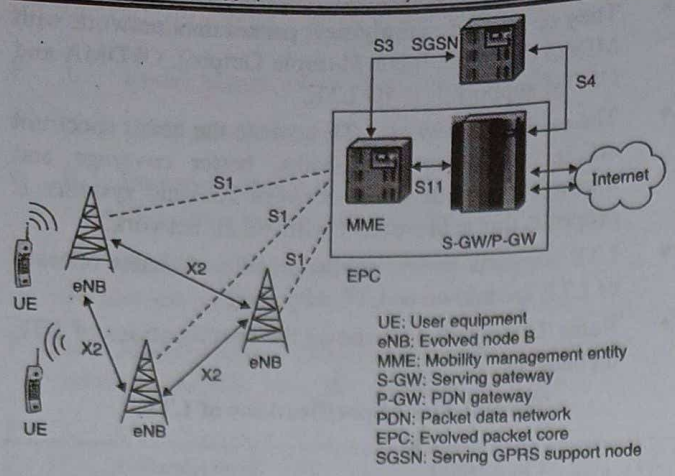

Fig. 2.38.1 : LTE network architecture

- Interfaces S1 to S11 and X2 are used for reliable packet routing and seamless integration in the network.
- The main components of the network are :
  1. User equipment (UE)
  2. Evolved nodeB (eNB)
  3. Evolved packet core (EPC)
  4. Mobility management entity (MME)
  5. Serving gateway (S-GW)
  6. PDN gateway (P-GW)

1. User equipment (UE)

This is the device connected to the BS which is an integral part of the eNB via RF channel.

2. Evolved nodeB (eNB)

- It consists of Base station. The communicating base station is known as serving eNB. It connects to the EPC through S1 interface and it is connected to other base stations through X2 interface. It's functions are :
  (i) Radio resource management for both uplink and downlink
  (ii) IP header compression
  (iii) Encryption of user data
  (iv) Routing of user data
  (v) Selection of MME
  (vi) Paging
  (vii) Measurement
  (viii) Scheduling
  (ix) Broadcasting

3. EPC

- It comprises of
  1. MME
  2. Serving gateway (S-GW)
  3. PDN gateway (P-GW)
- The functions of EPC are :
  1. Subscriber charging,
  2. Subscriber management,
  3. Policy control for user data flow,
  4. Providing quality of service,
  5. Connecting to external servers.

4. MME

- Functions performed by it are
  (i) Signalling and security control,
  (ii) Tracking area management,
  (iii) Inter core network signalling for mobility between 3GPP access networks,
  (iv) EPS (evolved packet system) bearer management,
  (v) Roaming and authentication with the help of HSS (Home Subscriber Server). [HSS is the database of subscribers and it helps MME in user authentication, mobility management, call setup and access authorization.]

5. S-GW (serving gateway)

- This gateway performs functions like
  (i) Handles eNB handovers
  (ii) Packet data routing
  (iii) Quality of service (QoS)
  (iv) User billing activities
  (v) Lawful interception
  (vi) Transport level packet marking
- It actually serves as a router for forwarding the data packets between the user equipment and PDN gateway.

6. P-GW (PDN gateway)

- This gateway is connected to the outside global network e.g. internet. Its functions are
  (i) IP address allocation
  (ii) Routing packets to and from PDN
  (iii) Subscriber charging.

2.39 LTE FRAME STRUCTURE

GQ. Explain the LTE frame structure in detail.
GQ. Discuss frames and slots in LTE. Also explain resource block.

- Frame structures in LTE system is different for FDD and TDD schemes.
- For FDD type 1 frame structure is used and for TDD type 2 frame structure is used.

CISCO Unified Wireless Network Architecture (UWN)

1] CISCO UWN ~~architecture~~ solution provides end-to-end security of architecture & product security features to protect wireless local area network [WLAN] endpoints, the WLAN infrastructure & client communications.

2] It is build on the security features of IEEE 802.11 standard by enhancing the radio frequency [RF] & N/W based security features to ensure overall security.

3] This Architecture is a multi-service solution designed for any type of organization.

4] It can be deployed in your corporate offices, branches, retail stores, hospitals, manufacturing plants, warehouses, educational institutions, & many other organizations that needs wireless connectivity.

5] It supports is a multi-service solution, data, voice & video applications.
Some examples are :- 1) Internet access
2) virtual private N/W [VPN] access
3) Mobile healthcare applications.

6] Features of CISCO UWN
1] Security :- Wifi-protected Access (WPA) WPA2 & mobile VPNs
2) Management
3) Performance
4) Mobility 5) Scalability 6) Integration.

7] CISCO UWN architecture has five important network elements
A] client devices
2] Access points
3] Network Unification
4] Network Management
5] Mobility services.

CISCO Unified Wireless Network Architecture (UWN)

1) CISCO UWN ~~architecture~~ solution provides end-to-end security of architecture & product security features to protect wireless local area network [WLAN] endpoints, the WLAN infrastructure & client communications.

2) It is build on the security features of IEEE 802.11 standard by enhancing the radio frequency [RF] & N/W based security features to ensure overall security.

3) This Architecture is a multi-service solution designed for any type of organization.

4) It can be deployed in your corporate offices, branches, retail stores, hospitals, manufacturing plants, warehouses, educational institutions, & many other organizations that needs wireless connectivity.

5) It supports is a multi-service solution, data, voice & video applications.
Some examples are :- 1) Internet access
2) virtual private N/W [VPN] access
3) Mobile healthcare applications.

6) Features of CISCO UWN → 1) Security :- Wifi-protected Access (WPA) WPA2 & mobile VPNs
2) Management
3) Performance
4) Mobility 5) Scalability 6) Integration.

7) CISCO UWN architecture has five important network elements
A] client devices
2] Access points
3] Network Unification
4] Network Management
5] Mobility services.

(7) **Services/Applications** : An enterprise-class WLAN must support mobility services and applications that use the unique attributes of the wireless network. Cisco includes support for :

- Voice services through a software application or a handset device.
- High-resolution location tracking for users and assets.
- Guest access to enable customers, consultants, contractors, suppliers, and vendors.
- Application-specific devices (ASDs), such as those used in retail or manufacturing environments.

6.6.2 Cisco Unified Wireless Network Architecture

As shown in Fig. 6.6.1, the Cisco UWN architecture is composed of five network elements :

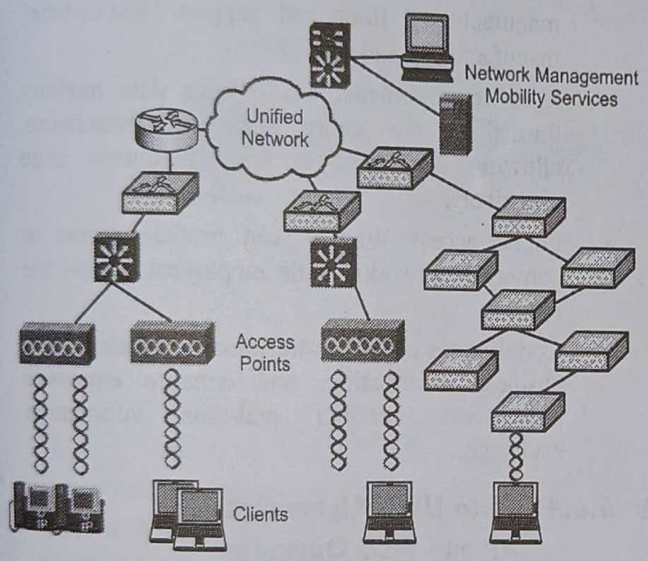

(1F2)**Fig. 6.6.1 : Cisco Unified Wireless Network Architecture**

(1) **Client Devices** : These include laptops, workstations, IP phones, PDAs, and manufacturing devices to access the WLAN. Client devices connect to a wireless network using wireless NICs or adapters in either ad hoc (peer-to-peer) or infrastructure mode utilizing access points (APs).

(2) **Access Points** : These devices provide access to the wireless network. APs are placed in strategic locations to minimize interference. Cisco APs can be either autonomous or light-weight.

Autonomous APs can be called as thick, fat, or decentralized APs. An autonomous AP has a local configuration and requires local management, which might make it difficult to maintain consistent configurations and raise network management costs.

Lightweight APs can be called thin or centralized APs. A WLAN controller (WLC) to which a lightweight AP is connected provides control and configuration. This provides a single point of management and decreases the risk of an AP being stolen.

(3) **Network Unification** : The WLAN system should be able to support wireless applications by providing security policies, QoS, intrusion prevention, radio frequency (RF) management, and wireless controllers.

(4) **Network Management** : Cisco Wireless Control System (WCS) provides a central management tool that lets you design, control, and monitor wireless networks.

(5) **Mobility Services** : These include guest access, location services, voice services, and threat detection and mitigation.

6.6.3 Benefits of Cisco UWN

The Cisco Unified Wireless Network enables enterprises to deploy wireless with confidence. The business benefits of the Cisco Unified Wireless Network are real and tangible. These benefits are achieved while maintaining enterprise-class security levels, and include :

(a) **Reduced Total Cost of Ownership (TCO)** : The Cisco Unified Wireless Network reduces TCO through minimizing the operational and capital costs associated with managing and deploying the wireless network. Cisco's solution provides :

- Scalable, problem-free administration that does not increase the burden on the IT staff.
- Control of wireless deployment costs without sacrificing reliability.
- Cost-effective point-to-point or point-to-multipoint wireless bridges designed specifically for ease of installation and operation.
- Built-in support for a variety of mobility services that are ready for immediate implementation or deployment over time via a phased integration.

(b) **Enhanced visibility control** : Cisco provides enhanced visibility and control of the wireless LAN, helping to ensure that wireless applications are delivered securely and reliably throughout an entire enterprise and managed centrally for greater scalability and ease of use.

- Thousands of authorized and unauthorized active Wi-Fi devices can be tracked simultaneously to within a few meters from directly within the WLAN infrastructure.
- System design delivers built-in resiliency and centralized control and management.
- Plug-and-play wireless devices with zero-touch configuration.

WSN [Wireless sensor Network]

Page No.
Date

→ 1] A wireless N/W is any type of hardware N/W where the N/W node is connected wirelessly.

2) WSN nodes are also known as motes.

3) WSN is an infrastructure-less-wireless network that is deployed in a large no. of wireless sensors in an ad-hoc manner that is used to monitor the system, physical or environmental conditions.

4) In WSN, ~~the~~ Nodes are mangers or monitors the environment in a particular area. They are connected to the base station which acts as a processing unit in the WSN system.

5) An object performing such a sensing task is called a sensor

6) It can be used in various places like schools, hospitals, buildings, roads, etc..,

7) WSN has include actuators, with the help of actuators they directly control the physical world.

8) WSN provides bridge betn physical & virtual world.

9) The main functions performed by the sensor nodes are sensing, data processing & communicating within the N/W.

10) WSN is an ad-hoc N/W having large no. of nodes. These nodes are the mini sensors capable of collecting & transmitting environmental data in autonomous way.

11) Applications of WSN :- 1] Internet of things [IOT]
2] Medical application
3] Agriculture
4] Landslide detection.

TNO repes for dig

Page No.
Date

- There are main 2 types of WSN architectures :-
  A] Layered N/W architecture.
  B] clustered N/W architecture.

A] Layered N/W architecture :-

This kind of N/W uses hundreds of sensor nodes as well as a base station. Here the arrangement of network nodes can be done into concentric layers.

It comprises five layers & three cross layers which include the following.

5-layers in architecture :- 1] Application layer
2] Transport layer
3] Network layer
4] Data link layer
5] Physical layer.

3-cross layers in architecture :- 1] Power Management plane
2] Mobility Management plane.
3] Task Management plane.

B] Clustered Architecture :- 1] In clustered N/W architecture, sensor Nodes autonomously clubs into groups called clusters.

2] The clustering process is applied recursively to form hierarchy of clusters. It is implemented using LEACH protocol.

3] LEACH stands for [Low Energy Adaptive clustering Hierarchy] this N/W is essential in case of data fusion.

4) Inside the cluster, each of the sensor node is communicates with cluster head to gather info. The info. is collected by clusters is shared by base stations.

5) cluster head is the leader & other nodes are Member Nodes (MN)

4.7.1(A) Layered Architecture of WSN/ Protocol Layer Architecture for WSN

- Refer Fig. 4.7.2. It shows protocol layer architecture for WSN. This type of layered Network Architecture consists of almost **few hundred** sensor nodes and a single powerful base station. The Network nodes are organized into **concentric Layers**.

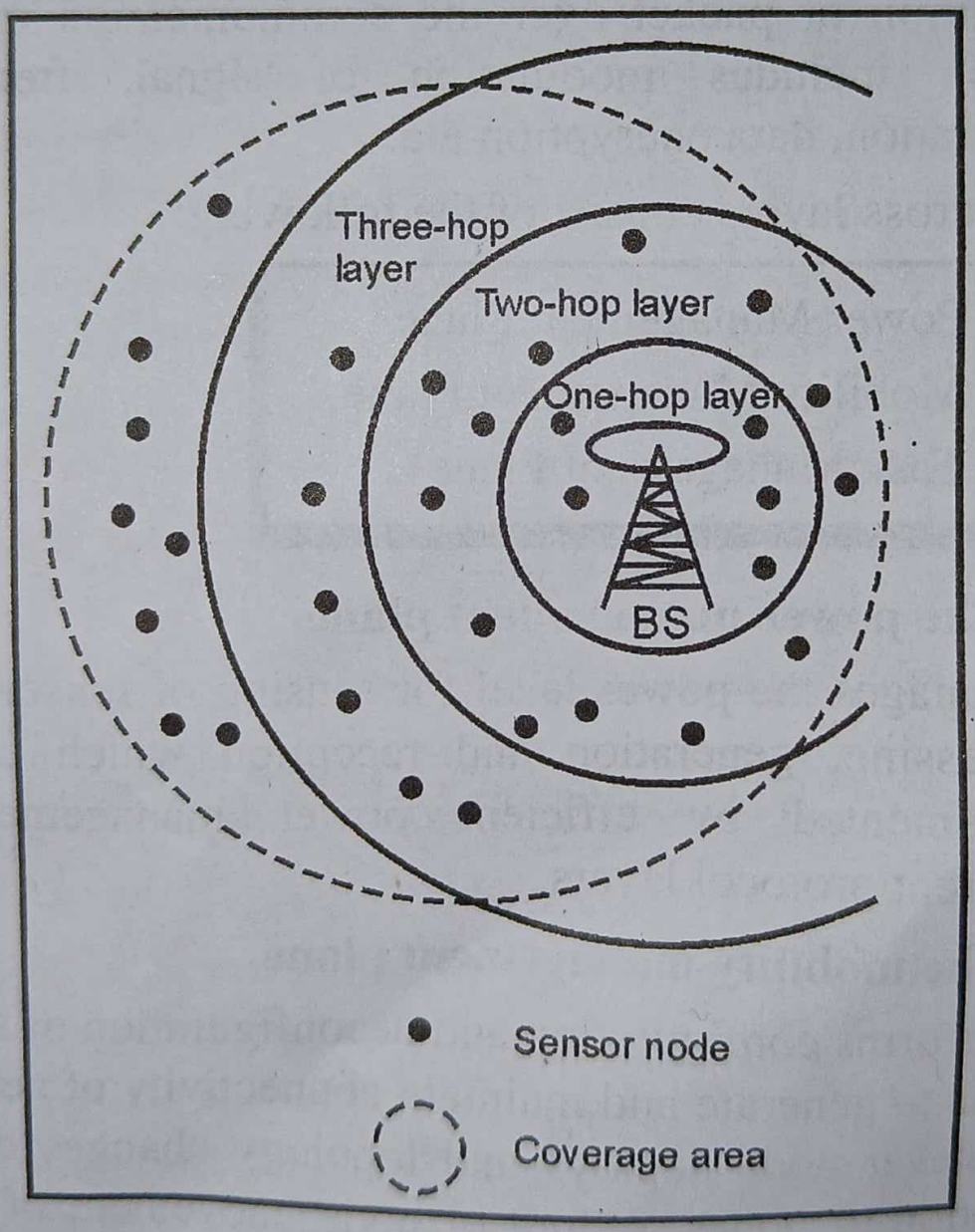

Fig. 4.7.2(a) : Layered structure of WSN

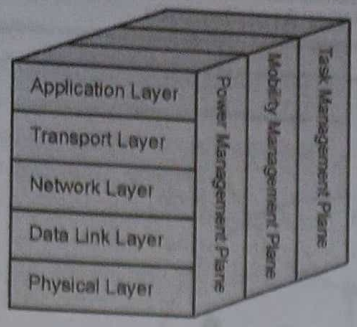

Fig. 4.7.2(b) : Protocol layer architecture for WSN

- In this each node participates only in short-distance, low power transmissions to the neighbouring nodes because of which power consumption are less as compared to other Sensor Network Architecture.
- **Five protocol layers of WSN are :**
  1. Physical layer
  2. Data link layer
  3. Network layer
  4. Transport layer and
  5. Application layer
- The **functions** of protocol layers are as follows:

1. **Application layer** takes care of various protocols to generate sensor network applications.
2. Responsibility of **transport layer** is to deliver reliable data required by the application layer.
3. For routing the data from transport layer, **network layer** is responsible.
4. The main functions of **data link layer** are framing, flow control, multiplexing, physical addressing, error and access control.
5. The **physical layer** is responsible for transmission and reception of packet over the communication medium which includes modulation of signal, frequency generation, data encryption etc.

- The cross layers consist of the following:

(i) Power Management Plane
(ii) Mobility Management Plane
(iii) Task Management Plane

(i) The power management plane

It manages the power level for sensing of sensor node, processing, generation and reception which can be implemented by efficient power management at different protocol layers.

(ii) The mobility management plane

It performs configuration and deconfiguration of sensor nodes to generate and maintain connectivity of network whenever node deploys and topology changes due to addition of nodes, failure of node, movement of node etc.

(iii) Task management plane

This plane is responsible for the task distribution among nodes in a sensing region to improve energy efficiency and to increase the lifetime of network.

4.7.1(B) Clustered Architecture

- Refer Fig. 4.7.3. It shows clustered architecture of WSN. In Clustered Network Architecture, Sensor Nodes **autonomously clubs** into groups called clusters.

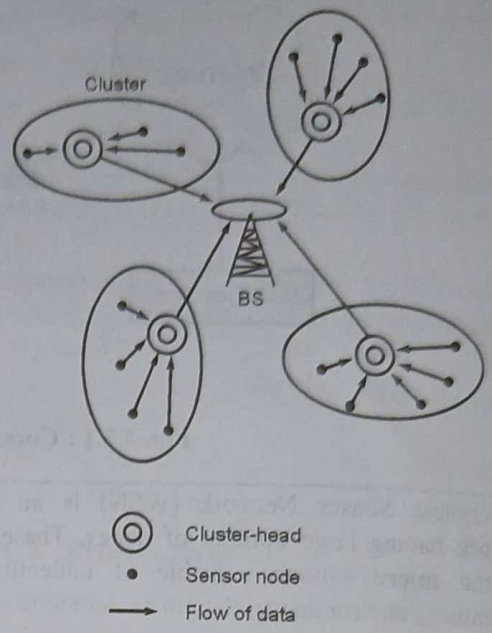

Fig. 4.7.3 : Clustered architecture of WSN

- The clustering process is applied recursively to form hierarchy of clusters. It is implemented using **LEACH** protocol.
- LEACH stands for **Low Energy Adaptive Clustering Hierarchy**. This type of network is essential in case of **data fusion**.
- Inside the cluster, each of the sensor node communicates with the cluster head to gather information. This information collected by clusters is shared with the base stations.
- The cluster formation and selection of cluster head inside each cluster is an independent and autonomous distributed process.
- Cluster head is the leader in this type of networks and other nodes are called **MN (member nodes)**.

4.7.2 Classification of Clustering Algorithms

- Refer Fig. 4.7.4. It shows the classification of clustering algorithms. Depending on characteristics and functionalities of sensor nodes there are various clustering algorithms.
- Hence it can be classified based on cluster formation criteria, algorithm complexity and cluster head selection.

connection-oriented

Syllabus Topic : IEEE 802.15.4 (ZigBee) – LRWPAN Device Architecture

4.2 ZIGBEE NETWORKS

GQ. What is ZigBee ? Explain in details ZigBee networks.

GQ. What is Zigbee ? Describe the different topologies used in zigbee network.

- It is LRWPAN technology. LRWPAN stands for Low Range Wireless Personal Area Network.
- ZigBee is developed by ZigBee alliance, which has hundreds of member companies (Ember, Freescale, Chipcon, Invensys, Mitsubishi, CompXs, AMI Semiconductors, ENQ Semi conductors).
- It is developed for personal area network.
- ZigBee is a standard based network protocol that uses the transport services of the IEEE802.15.4 network specification.

4.2.1 Applications of Zigbee

Zigbee alliance has developed following applications for ZigBee

1. **Smart energy :** ZigBee can be used to read meters of gas, water, electricity etc. This means smart energy systems can connect home appliances and utility companies for improving energy efficiency.
2. **Commercial building application :** ZigBee can be used for maintenance of the building for the functions like smoke detector, fire-door position etc.
3. **Home automation :** ZigBee can be used for home automation purpose for the functions like automatic switch ON and OFF of AC, lights etc.
4. **Health monitoring systems :** Without limiting the patient's mobility, his health can be monitored with the help of Zigbee.
5. **Telecom applications :** ZigBee can be embedded into mobile phones for better communication
6. **Consumer electronics :** ZigBee can serve the purpose of remote controls.
7. **Industrial process monitoring and control :** It can be used for industrial process and monitoring without wires.

Syllabus Topic : IEEE 802.15.4 (ZigBee) - Protocol Stack

4.2.7 ZigBee Protocol Stack

Refer Fig 4.2.5. It shows ZigBee protocol stack.

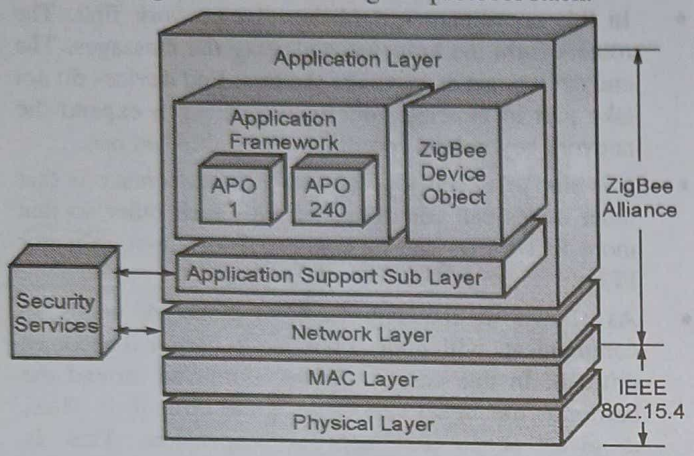

Fig. 4.2.5 : ZigBee protocol stack

- ZigBee builds on IEEE standard 802.15.4 which defines the physical and media access control (MAC) layers. ZigBee alliance defines the network layer and application layer.

1. Physical Layer

- This layer is related with the hardware and it controls and communicate with the radio transceiver directly.
- It does the functions like initialization of the hardware, channel selection, link quality estimation, energy detection measurement and clear channel assessment to assist the channel selection.
- Three frequency bands are supported namely 2.45GHz (16 channels), 915MHz (10 channels) and 868MHz (1 channel).

2. MAC layer

- This layer provides interface between physical layer and network layer. This provides two services namely MAC data services and MAC management services.
- It generates bacon signals for synchronization. It also performs the tasks of association and disassociation.

3. Network layer

Network layer interfaces between application layer and MAC Layer. This Layer is responsible for network formation and routing. It also provides network wide security and allows low power devices to maximize their battery life.

4. Application layer

- The application Layer is the highest protocol layer and it hosts the application objects.
- ZigBee specification separates the APL layer into three different sub-layers namely the Application Support Sub layer, the ZigBee Device Objects, and Application Framework having manufacturer defined Application Objects.

(a) **Application objects (APO) :** It controls and manages the protocol layers in ZigBee device

(b) **ZigBee Device Objects :** The functions performed by this are service discovery, security and binding.

(c) **Application support sub layer (APS) :** provides an interface between the NWK and the APL layers through a general set of services provided by APS data and management entities.

- Security service provider: It includes methods for key establishment, key transport, frame protection and device management.

Syllabus Topic :Wireless Sensor Network - Design Considerations

4.3 INTRODUCTION TO WIRELESS SENSOR NETWORK (WSN)

- A wireless network is any type of **hardware network** where the network node is connected wirelessly. Wireless sensor networks comprise of individual nodes these individual nodes are known as **motes**.

❑ **Definition :** A Wireless Sensor Network is a self-configuring network of small sensor nodes communicating among themselves using radio signals, and deployed in quantity to sense, monitor and understand the physical world.

- These motes can interact with their environment by sensing and controlling physical parameters. But these motes need to collaborate with other motes so as to complete their task.
- Single node is not capable of fulfilling the task alone. Hence wireless communication between the multiple nodes is set up and network is formed to complete the assigned task.
- Sensing is a technique used to gather information about a physical object or process, including the occurrence of events (i.e., changes in state such as a drop in temperature or pressure).
- An object performing such a sensing task is called a **sensor**.

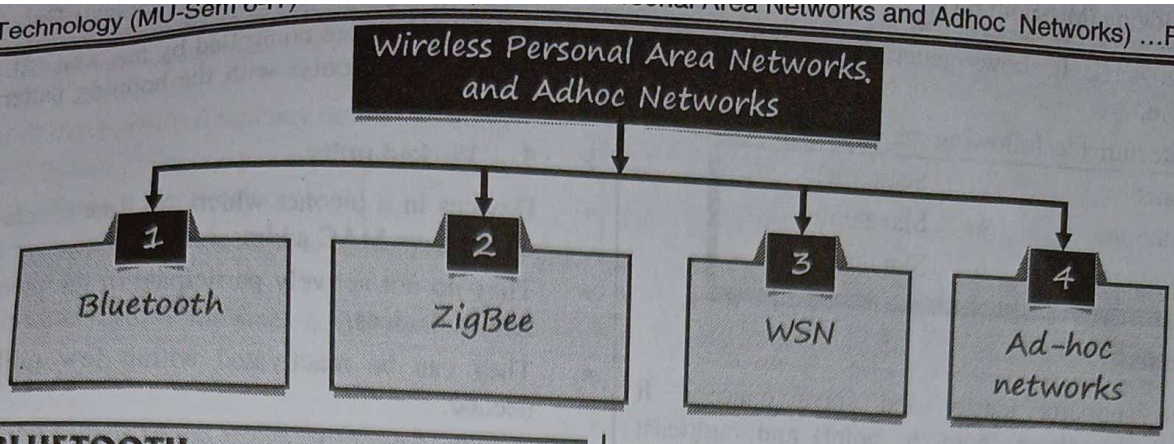

4.1 BLUETOOTH

GQ. Describe Bluetooth architecture and protocol stack. Also, discuss its limitations.

Introduction

- It is the technology used to connect mobiles with their peripherals. It is an open standard that allows communication between diverse devices with standard short range wireless radio connection.
- Though it is aimed to replace wired technologies, today it has got many different advantages and applications.
- Bluetooth technology allows users to make ad hoc Wireless connections between devices like mobile phones, desktops, laptops etc.
- Devices having Bluetooth enabled chips can carry data transfer at the rate of 720 kbps within maximum 50 m of range even through the walls, clothing and even luggage bags.

What are the advantages / Features of Bluetooth technology ?

1. Low complexity architecture
2. Robustness
3. Less cost
4. Low power consumption
5. Support for voice as well as data both
6. Secured communication standard
7. Accessibility to the local network as well as internet.
8. Uses fast FHSS

User scenario

Many different configurations with Bluetooth based piconet are possible.

Connection of peripheral devices

- Nowadays most of the devices makes use of wires to connect to the peripheral devices such as keyboard, mouse, headset, speakers etc.
- Each type of device has its own type of cable, connectors, plugs etc. In a wireless networks no wires are needed to connect such devices.
- Bluetooth piconet can be used to connect such peripherals without wires to the wireless terminals such as laptop or PDA.

Support for ad hoc networking

- Ad hoc networks are useful for tradeshows and exhibitions where several people come together and exchange data.
- Wireless networks can support this type of interaction. Small devices may not have WLAN adapters of IEEE 802.11 standard, but cheaper Bluetooth chips built in.

Bridging of Networks

- Using wireless piconets, a mobile phone can be connected to a PDA or laptop in a simple way.
- The mobile phone that has Bluetooth chip can now act as a bridge between the local piconet and the global GSM network.

Syllabus Topic : IEEE 802.15.1 (Bluetooth) – Piconet, Scatter net

4.1.1 Bluetooth Architecture

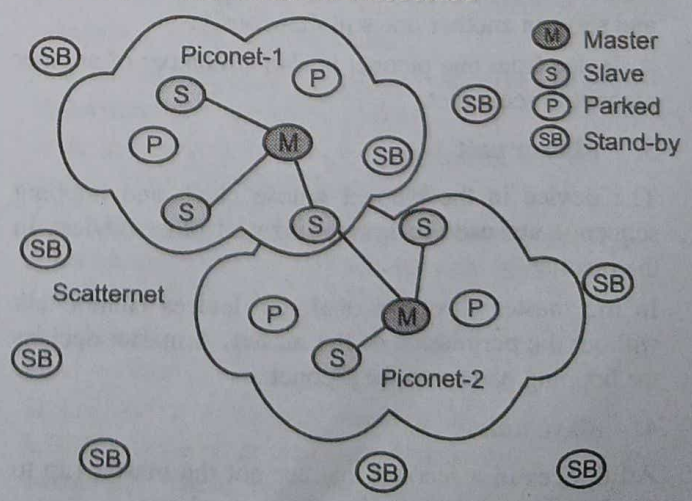

(5D31)**Fig. 4.1.1 : Bluetooth Architecture**

- Refer Fig. 4.1.1. It shows general idea of Bluetooth architecture.
- The architecture has following major blocks

1.	Piconet	2.	Scatternet
3.	Master unit	4.	Slave units
5.	Parked units	6.	Standby units

1. Piconet

- Bluetooth supports master and slave concept. It supports both unicast (point to point) and multicast (point to multipoint) connection.
- Piconet is formed by master and slave units. These devices are connected in ad hoc fashion. Ad hoc is a type of connection which is temporary. In such type of terminal to terminal is connected temporarily.
- Initially only two devices are connected in piconet.
- The devices can be PC or cellular phone. It may grow to eight connected devices later on.
- All Bluetooth devices are peer units and have identical implementations.
- However, when establishing a piconet, one unit will act as a master for synchronization purpose, and the others act as slaves for the duration of the piconet connection.
- A 3-bit medium access control address used to distinguish between units present in the piconet. It is known as MAC address.

2. Scatternet

- Scatternet is made up of two or more piconets. These two piconets must be independent and non-synchronized piconets that communicate with each other.
- A master unit in one piconet can establish this connection by becoming a slave in the other piconet. Hence a single device can act as master in one piconet and slave in another one simultaneously.
- A device from one piconet is also a member of another piconet in scatternet.

3. Master unit

- The device in the piconet whose clock and hopping sequence are used to synchronize all other devices in the piconet.
- In the master slave protocol the devices cannot talk without the permission of the master. A master decides the hopping pattern in the piconet.

4. Slave units

- All devices in a piconet that are not the master (up to seven active units for each master) are slaves.
- All the slaves are controlled by masters. All the slaves have to synchronise with the hopping pattern decided by the master.

5. Parked units

- Devices in a piconet which are time-synchronized but do not have MAC addresses.
- They do not actively participate in the piconet but are known devices.
- They can be reactivated within few milliseconds if needed.

6. Standby units

- These devices are synchronized to a piconet. But they temporarily moved to power-saving mode in which device activity is reduced.
- Devices in standby do not participate in piconet.

Syllabus Topic : IEEE 802.15.1 (Bluetooth) – Protocol Stack

4.1.2 Bluetooth Protocol (IEEE 802.15.1 Protocol)

GQ. Explain in detail Bluetooth Protocol Architecture.
GQ. Describe Bluetooth architecture and protocol stack. Also, discuss its limitations.
GQ. Describe Bluetooth protocol stack.

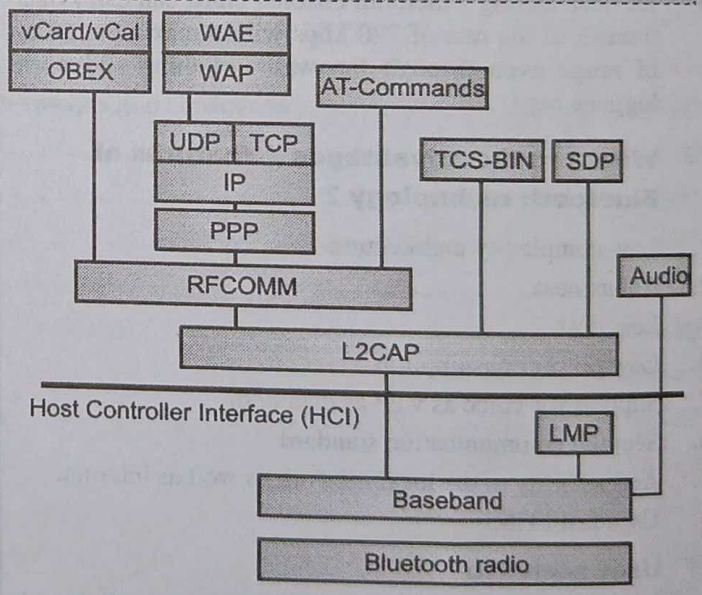

(5D32)**Fig. 4.1.2: Bluetooth protocol stack**

- Refer Fig. 4.1.2. It shows Bluetooth protocol stack.
- Bluetooth protocol stack is a combination of multiple application specific stacks.

3.3 IEEE 802.11 (WI-FI)

In the family of IEEE 802.11 many WLAN standards are included. The main goal of this standard is to set up simple and robust WLAN which offers time- bounded and asynchronous services.

Syllabus Topic : IEEE 802.11(Wi-Fi) – Architecture

3.3.1 System Architecture of IEEE 802.11

GQ. Explain different architectures of WLAN.

Wireless networks can exhibit two different basic system architectures.

A. Infrastructure based WLAN
B. Ad hoc WLAN

3.3.1(A) Infrastructure based WLAN Architecture

- Refer Fig. 3.3.1. It shows the system architecture of WLAN.

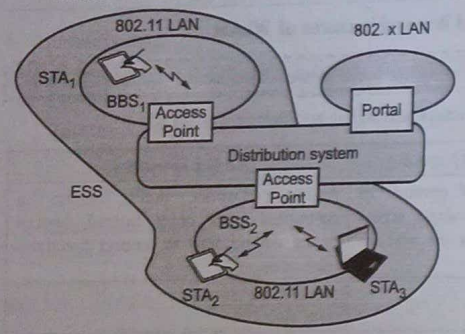

(5D2)Fig. 3.3.1 : WLAN system architecture

The system comprises of

(i) STA (Station)
(ii) Access Point (AP)
(iii) Portal (PO)
(iv) DS (Distribution System)
(v) BSS (Basic Service Set)
(vi) ESS (Extended Service Set)

(i) STA (Station)

It is nothing but a mobile station.

(ii) Access Point (AP)

- It is a special central traffic relay station that usually operates on fixed channel.
- It is stationary. It can be viewed as the coordinator in the group of stations.
- It is like the base station in GSM network.
- It supports roaming that is changing access points. They also control power management and synchronization functions.

(iii) Portal (PO)

- It is typical access point which interconnects wired LAN and wireless LAN.
- It is the logical interconnection between the two networks.

(iv) DS (Distribution System)

- DS is the backbone network that is responsible for the MAC layer transport of MAC service data units.
- Examples include 802.3 Ethernet, IEEE 802.4 token bus LAN, fiber optic LAN etc.
- A DS connects several BSSs via the AP to form a single network. Thus, it extends the wireless coverage area.
- It handles data transfer between the different APs.

(v) BSS (Basic Service Set)

- It is the smallest building block of the WLAN system. It consists of some number of stations and access points in the network.
- Simplest BSS has only two STAs.
- The association of STA and BSS is entirely dynamic.
- BSS may be isolated, or it may be connected to the backbone Distribution System (DS) through an Access Point (AP).
- This mode of operation is known as ad hoc networking as this type of IEEE 802.11 WLAN is created and maintained without prior administrative arrangement.

(vi) ESS (Extended Service Set)

- It is a set of two or more BSSs forming a single sub-network.
- ESS configurations consist of multiple BSS cells that can be linked by either wired or wireless backbones known as DS.
- IEEE 802.11 supports ESS configurations in which multiple cells use the same channel.
- It may also use different channel to aggregate throughput.

- The STAs in ESS can be mobile or stationary. Stationary STAs are actually AP. They are part of wired LAN.
- When the BSSs are connected, two stations can communicate directly without AP.
- But if stations are belonging to different BSSs then they have to communicate via AP.

3.3.1(B) Ad hoc WLAN Architecture

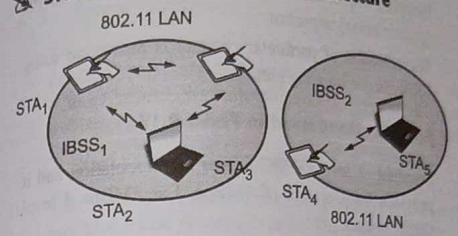

(5D4)Fig. 3.3.2 : ad-hoc WLAN architecture

- Refer Fig. 3.3.2. It shows ad hoc WLAN architecture.
- In addition to infrastructure-based architectures, IEEE 802.11 also supports ad hoc network between stations.
- It forms IBSS (Independent Basic Service Set).

IBSS (Independent Basic Service Set)

- When all the stations in BSS are mobile and it has no connection with other BSSs, the BSS is known as IBSS.
- It is an ad hoc network. This does not contain AP and it cannot transmit data to other stations.
- It is formed using one or more stations belonging to same radio frequency. The stations within the IBSS can communicate directly without APs.
- Several IBSS can be formed by keeping certain distance between them or by using different carrier frequencies.

Syllabus Topic : IEEE 802.11(Wi-Fi) -Protocol Stack, Enhancements and Applications

3.4 PROTOCOL ARCHITECTURE OF IEEE 802.11

GQ. Explain the protocol architecture of IEEE 802.11.

- Refer Figs. 3.4.1(a) and (b). Its shows the protocol architecture of IEEE 802.11 standard.
- As shown in the Fig. 3.4.1 (a), WLAN is connected to the IEEE 802.3 Ethernet vista bridge. WLAN behaves like slow wired LAN.

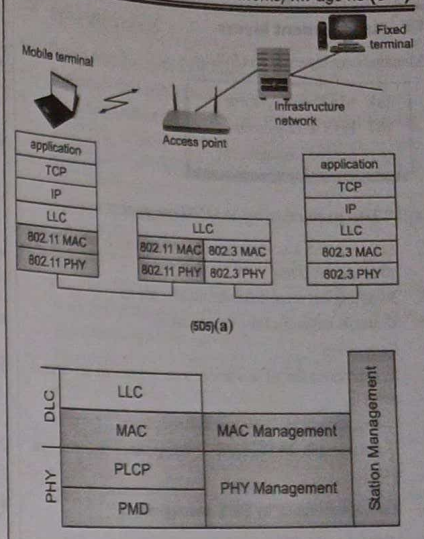

(5D6)Fig. 3.4.1: (a) and (b) protocol architecture of IEEE 802.11 standard

- The higher layers (Application, TCP, IP) of wireless node works same as wired node.
- The upper part of data link control layer i.e. Logical Link Control (LLC) covers the differences of the medium access control layers needed for different media. IEEE 802.11 standard only covers the specification of physical layer and MAC layer.

Physical layer

- It is subdivided into Physical Layer Convergence Protocol (PLCP) and the Physical Medium Dependent sublayer (PMD) as shown in Fig. 3.4.1(b).
- PLCP sublayer provides a carrier sense signal. It is known as Clear Channel Assessment (CCA).
- It also provides common PHY Service Access Point (SAP). This SAP is independent of transmission technology used.
- The PMD sublayer handles the modulation and encoding/decoding of the signals.

MAC layer

Tasks performed are :

1. Medium access
2. Fragmentation of user data
3. Encryption

Module 3

Page No.
Date

What is Wi-max

1) Wi-Max provides wireless (broadcast) connectivity all over the large metropolitian city.

2) In June 2001, Wi-Max forum defined Wi-Max (802.16) as worldwide interoperability for microwave access.

3) Wi-max is a standard technology, which allows the delivery of last-mile wireless broadband access. It is used as an alternative to using cables & DSL (digital subscriber line)

4) Wi-max operates both licensed & non-licensed frequency bands using following two configuration. It extends its coverage area to town & cities wirelessly through the following configurations

3.10.1 WiMAX

GQ. Explain in detail Wi-Max Technology.

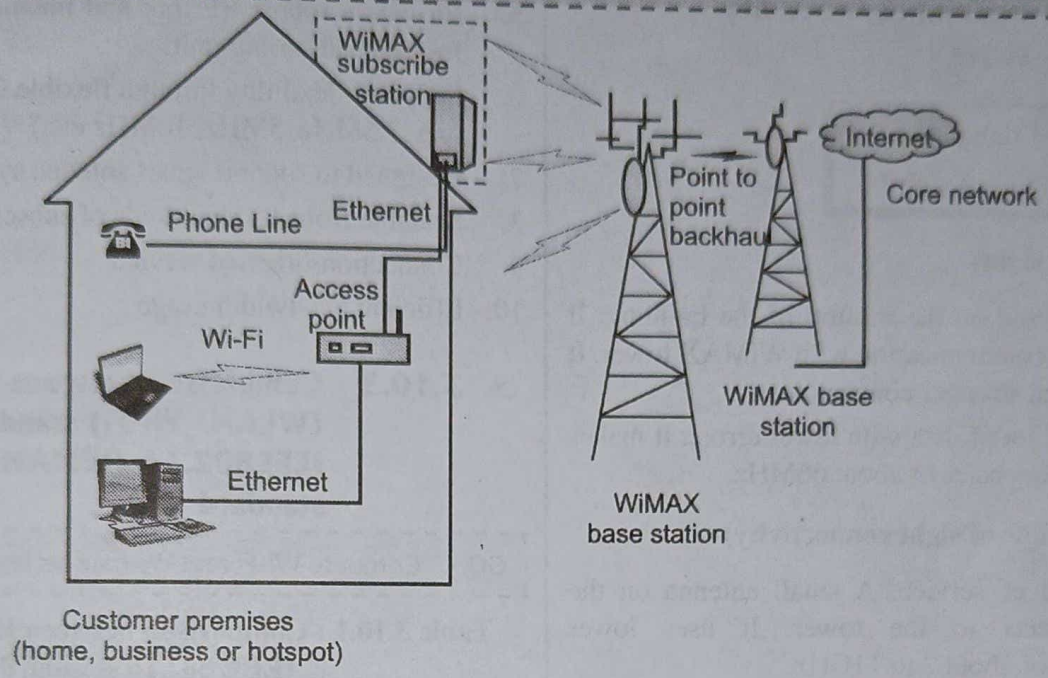

Fig. 3.10.1 : Architecture of WiMAX

- WiMAX is abbreviated for worldwide interoperability for microwave access.
- It is designed to provide broadband Internet access from fixed or mobile devices via antennas. It is the last mile solution for wireless broadband access. It is an alternative to cable and DSL (Digital Subscriber's Line). Hence it is said that WiMAX is IP centric service provided over wide area.
- Subscriber stations communicate with base-stations that are connected to a core network.
- It is a good alternative to fixed line networks. It is simple to build and relatively inexpensive.
- Refer Fig. 3.10.1. It shows general architecture of WiMAX.
- WiMAX supports very high bandwidth solutions where large spectrum deployments (i.e. >10 MHz) are desired. It also reduces the cost as no cables are involved.

- The Architecture of the WiMAX comprises of :

1. Core network
2. BS (Base station)
3. SS (Subscriber station)
4. TE (Terminal equipment)

1. Core network

It is the standard internet network. It provides the platform for the broadband connectivity.

2. BS (Base station)

- It is the WiMAX cell site. They are the towers with antennas equipped over it. It provides connectivity with the public network. The communication between the subscriber station and the base station is two-way.
- Uplink connection is from SS to BS and downlink connection is from BS to SS.
- A single BS can cover upto 3000 Sq. miles of area.

3. SS (Subscriber station)

- It is the subscriber station equipped with an antenna. This antenna is usually mounted on building.
- It is connected to the base station via microwave links.

4. TE (Terminal equipment)

It can be any device like mobile, laptop etc. It is connected to the subscriber station via access point. The telephone is connected to the subscriber station via Ethernet.

Two types of channel connectivity supported by WiMAX

1. LOS (line of sight)
2. NLOS (non line of sight)

1. LOS (line of sight)

- An antenna is fixed on the rooftop of the building. It has line of sight communication with WiMAX tower. It is more stable and stronger connection.
- It is able to send lot of data with fewer errors. It makes use of higher frequencies of about 66MHz.

2. NLOS (Non line of sight connectivity)

It is Wi-Fi kind of service. A small antenna on the computer connects to the tower. It uses lower frequency range of about 2 to 11GHz.

Features of WiMAX

1. It uses wireless link with microwaves or millimetre waves.
2. Uses licensed spectrums.
3. Simple stationary antennas tower mounted antennas
4. It is connection oriented wide area service.
5. Supports high bandwidth and hundreds of users per channel.
6. Range : 30 miles
7. It is capable of providing broadband access to remote places.
8. Makes use of point to multipoint architecture.
9. Provides broadband and quality of service guarantee data transmissions

3.10.2 IEEE 802.16a Standard

- Few advancements in the physical layer of IEEE 802.16 are to done and IEEE802.16a is standardised. This is done to meet growing BWA (broadband wireless access) demand.
- It is developed to give access of high-speed internet access to home or business organizations.
- It provides good performance in robustness and supports good quality of service.
- It supports NLOS communications.

IEEE 802.16 features/Specifications

1. Operating spectrum : 2 - 11 GHz
2. Connectivity : NLOS (Non line of sight)
3. TDD and FDD duplexing support
4. 256 point FFT OFDM used
5. Ensures a robust RF link and maximizes the data rate for each subscriber unit.
6. Supports flexibility through flexible Channel sizes (e.g. 3.5MHz, 5MHz, 10MHz etc.)
7. Designed to support smart antenna systems
8. Scalable from 1 to hundreds of subscribers
9. Connection-oriented service
10. Efficient bandwidth usage

3.10.3 Comparison between IEEE802.11 (WLAN/ Wi-Fi) standard and IEEE802.16 (WMAN/ WiMAX) standard

GQ. Compare Wi-Fi and Wi-max technology.

Table 3.10.1 : Comparison between IEEE802.11 and IEEE 802.16 standard

Sr. No.	Parameter	IEEE802.11	IEEE802.16
1.	Technology	WLAN	WiMAX
2.	Operating spectrum	2.4 GHz / 5.2GHz	2 - 11GHz / 11-60GHz
3.	Bandwidth	11 - 54Mbps	Upto 70Mbps
4.	Range (LOS)	100m	30 - 50 km
5.	Range (NLOS)	30m	2 - 5 km
6.	Mobility	Portable	Fixed
7.	Data rate	Upto 54Mbps	Upto 150Mbps
8.	Application	Indoor	Outdoor
9.	Protocols supported	802.11a/b/g/n/ac/ad etc.	802.16a/d/e/m etc.
10.	Modulation	OFDM,DSSS	QPSK

3.10.4 Comparison between WPAN, WMAN and WLAN standards

Table 3.10.2 : Comparison between WPAN, WLAN and WMAN standards

Sr. No.	Parameter	WPAN	WLAN	WMAN/ WiMAX
1.	IEEE standard	IEEE802.15	IEEE802.11	IEEE802.16
2.	Standards	Bluetooth	Wi-Fi	Wimax
3.	Operating frequency spectrum	2.4 - 2.483 GHz	2.4 GHz / 5.2GHz	2 - 11GHz/ 11 - 60GHz
4.	Mobility	Portable	Portable	Fixed
5.	Data rate	1 - 4Mbps	Upto 54Mbps	Upto 150Mbps
6.	Modulation	FHSS	OFDM,DSSS	QPSK
7.	Range	1 - 3 m	112 m	Variable
8.	Application	Cable replacements for peripherals	Mobile extension of wired networks	Fixed wireless between homes and businesses and the Internet

Syllabus Topic : IEEE 802.16 (WiMax) – Physical and MAC layer

3.11 PHY AND MAC LAYER IN WIMAX

3.11.1 Physical layer in WiMAX

- The 802.16 PHY supports TDD and full and half duplex FDD operations. Adaptive modulation and coding (AMC) is supported.
- Hybrid automatic repeat request (HARQ) and fast channel feedback (CQICH) schemes are used to enhance coverage and capacity of WiMAX in mobile applications.
- Since the PHY layer design for 2-11 GHz range is complex, burst by burst adaptability for modulation and coding schemes is used.
- There are three different air interfaces used in the range of 2-11 GHz. They are as follows.
- Wireless MAN — SCa uses single carrier modulation.
- Wireless MAN — OFDM uses a 256-carrier OFDM. This air interface provides multiple access to different stations through time-division-multiple access.
- Wireless MAN — OFDM uses a 2048-carrier OFDM scheme. The interface provides multiple access by assigning a subset of the carriers to an individual receiver.
- In the downlink with mobile WiMAX, QPSK, 16-QAM and 64QAM are supported however 64 QAM is optional in uplink.
- Coding schemes supported are convolutional codes and turbo codes Adaptability of data rate is achieved with the help of combinations of various modulation and coding schemes
- The base station (BS) scheduler determines the appropriate data rate for each burst allocation based on the buffer size, channel propagation conditions at the receiver, etc. A channel quality indicator (CQI) channel is used to provide channel state information from the user terminals to the BS scheduler.
- WiMAX supports fully asynchronous operation.

3.11.2 WiMAX-Medium Access Control (MAC) layer

- The MAC layer of WiMAX is designed to support distributed stations with high data rates.
- The 802.16 MAC is a scheduling MAC where the subscriber only has to compete once (for initial entry into the network). After that it is allocated a time slot by the base station.
- The time slot can enlarge and constrict, but it remains assigned to the subscriber
- This scheduling algorithm is stable under overload and oversubscription.
- It is also more bandwidth efficient. The scheduling algorithm allows the base station to control QoS by balancing the assignment among the needs of subscribers.
- MAC layer supports TDD and FDD type of duplexing.
- IEEE 802.16 MAC is connection oriented. It performs link adaptations and ARQ functions to maintain target bit error rate thereby maximizing the data throughput. It supports IPv4, IPv6, Ethernet, and ATM.

Self Learning Topics : WLL(Wireless Local Loop)

3.12 FIXED WIRELESS COMMUNICATION : WLL - WIRELESS LOCAL LOOP

- **Loop :** It is defined as the circuit connecting a subscriber's station that is telephone set with the line terminating equipment in central office. Central office is a switch in the telephone network.

2.28 GSM TIME HIERARCHY

GQ. Write short note on : GSM burst structure.

Each logical channel carries specific type and format of burst in the allotted time slot. Normal GSM burst is already explained in previous sections. (please refer section 2.25)

1. FCCH burst

- Refer Fig. 2.28.1, it contains 3 start bits and 3 stop bits. It has 142 zero bits between start and stop bits. This long stream of zeros in GMSK modulator gives output of unmodulated sinusoidal frequency which is shifted by 1625/24 kHz from carrier frequency. It helps in identification of the broadcast carrier. Thus MS carrier frequency is tuned.

T	Binary bits for frequency correction	T	G
3	142	3	8.25

Fig. 2.28.1 : FCCH burst

2. SCH burst

- It contains 3 start bits and 3 stop bits. It has 39 bits of encrypted data twice in the burst and in between those data bits 64 training bits are inserted. The data bits are used to identify the BS colour code (0-7) and colour code of PLMN (public land mobile network). This identifies the service provider of the user.
- Frame numbers are needed in the process of data encryption and decryption.
- Total number of frames is 26(frames) × 51(multiframes) × 2048 (superframes) = 2715648 TDMA frames. Now these frames are numbered from 0 to 2715647. Current frame number is transmitted in synchronization burst in a reduced form which is known as Reduced Frame Number (RFN).
- This training sequence is applied to determine the samples of the channel impulse response which are used in detection process.
- These training bits ensures more precise channel estimation and more reliable detection. Refer Fig. 2.28.2

T	Information	Training bits	Information	T	G
3	39	64	39	3	8.25

Fig. 2.28.2 : SCH burst

3. RACH burst

- System access request and acknowledgements are carried in this burst on reverse link.
- It is shortest burst of the system.

- It has 8 start bits followed by 41 bits of synchronization. These 41 bits are used to identify the channel properties and synchronization of BS receiver.
- After synchronization bits 36 bits of encrypted data are added. And then 3 stop bit are present in the burst.
- It consists of long guard period of 68.25 bits for timing advance information. Refer Fig. 2.28.3.

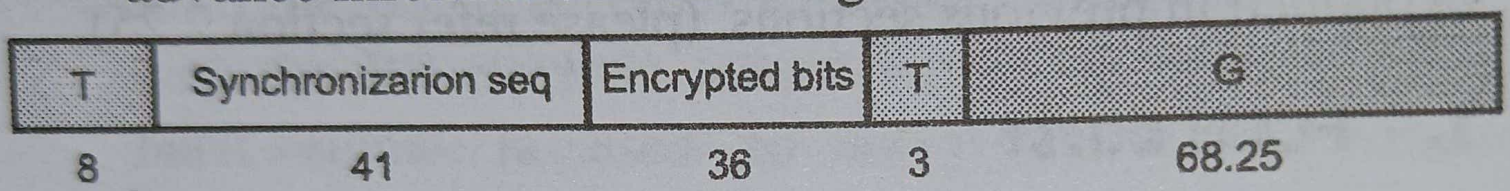

Fig. 2.28.3 : RACH burst

4. Dummy burst

- Its structure is same as that of normal burst. Only difference is that encrypted data bits does not carry useful information.
- Dummy bursts are placed in the time slots which are currently idle and not allotted to any user.
- Dummy bursts are useful in maintaining the high mean power of the broadcast channel by providing stuffing sequence. Refer Fig. 2.28.4.

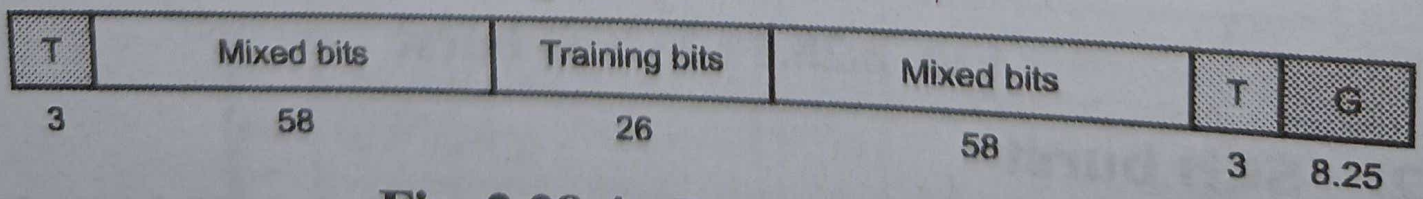

Fig. 2.28.4 : Dummy burst