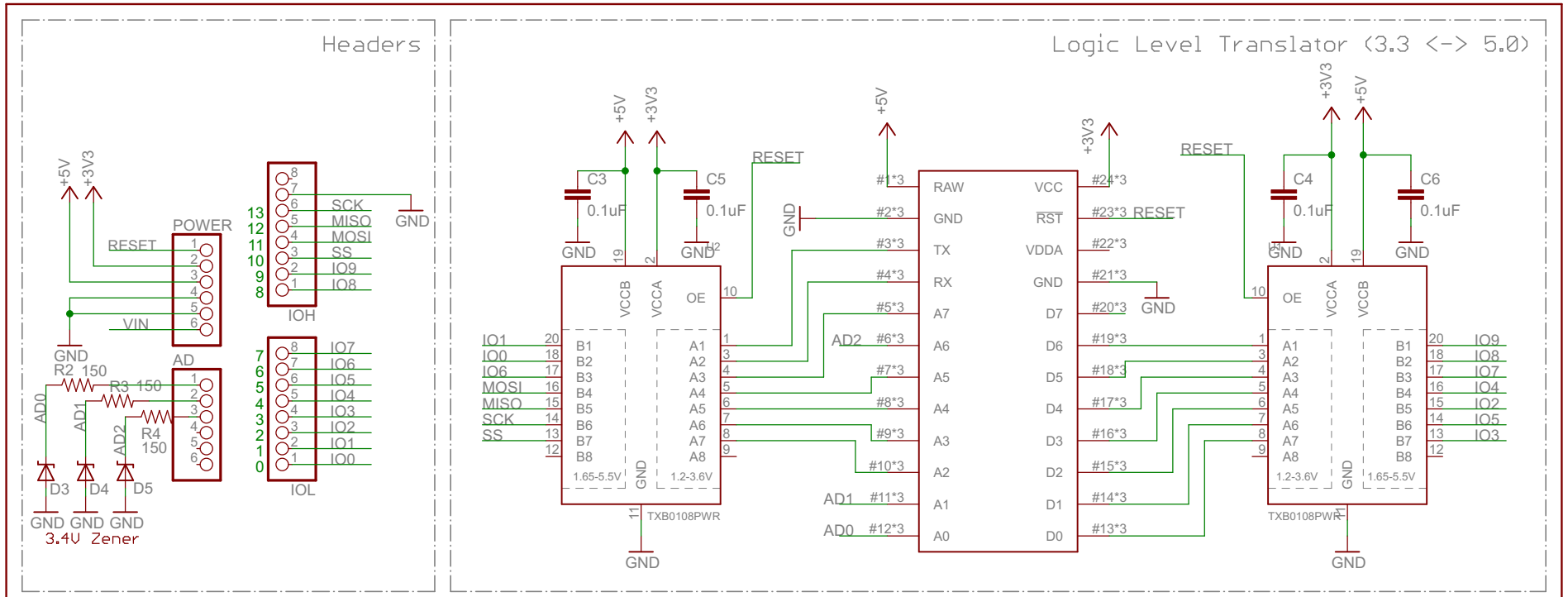

Reference Designs ARE PROVIDED "AS IS" AND "WITH ALL FAULTS. SPARK LABS, INC ("SPARK") DISCLAIMS ALL OTHER WARRANTIES, EXPRESS OR IMPLIED, REGARDING PRODUCTS OR THE REFERENCE DESIGNS, INCLUDING BUT NOT LIMITED TO, ANY IMPLIED WARRANTIES OF MERCHANTABILITY, FITNESS FOR A PARTICULAR PURPOSE, OR NON-INFRINGEMENT.

Spark may make changes to specifications and product descriptions at any time, without notice. The Customer must not rely on the absence or characteristics of any features or instructions marked "reserved" or "undefined." Spark reserves these for future definition and shall have no responsibility whatsoever for conflicts or incompatibilities arising from future changes to them. The product information on the Web Site or Materials is subject to change without notice. Do not finalize a design with this information.
Spark is a registered trademark.

CORE	Shield I/O pin	Voltage
A0	ADC0	3V3
A1	ADC1	3V3
A2	IO10/SS	5V
A3	IO13/SCK	5V
A4	IO12/MISO	5V
A5	IO11/MOSI	5V
A6	ADC2	3V3
A7	IO6/PWM	5V
D0	IO3/PWM	5V
D1	IO5/PWM	5V
D2	IO2	5V
D3	IO4	5V
D4	IO7	5V
D5	IO8	5V
D6	IO9	5V
D7	NC	NA
TX	TX	5V
RX	RX	5V
RST	RESET	
AREF	NC	NA
NC	ADC3	NA
NC	ADC4	NA
NC	ADC5	NA

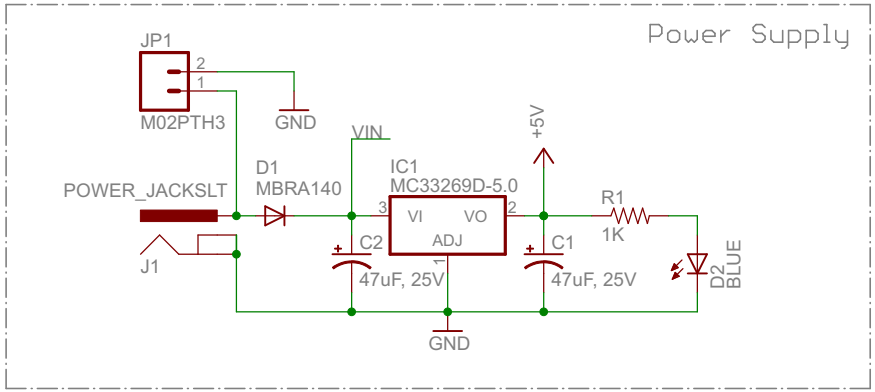

open hardware

Shield design by Spark Devices
Libraries by Sparkfun and Adafruit
Original Arduino design by Team Arduino

Spark Devices

TITLE: shield-shield

Spark

Document Number:

REV: v2.0.1

Date: 3/26/2014 4:36:18 PM

Sheet: 1/1