INTERNATIONAL STANDARD

ISO 11898-3

First edition
2006-06-01

Road vehicles — Controller area network (CAN) —

Part 3: Low-speed, fault-tolerant, medium-dependent interface

Véhicules routiers — Gestionnaire de réseau de communication (CAN) —

Partie 3: Interface à basse vitesse, tolérant les pannes, dépendante du support

Reference number
ISO 11898-3:2006(E)

© ISO 2006

Copyright International Organization for Standardization
Provided by IHS under license with various National Standards Bodies
No reproduction or networking permitted without license from IHS

Licensee=Universita di Bologna/5930975001, User=bao, zhou
Not for Resale, 01/11/2017 18:44:19 MST

PDF disclaimer

This PDF file may contain embedded typefaces. In accordance with Adobe's licensing policy, this file may be printed or viewed but shall not be edited unless the typefaces which are embedded are licensed to and installed on the computer performing the editing. In downloading this file, parties accept therein the responsibility of not infringing Adobe's licensing policy. The ISO Central Secretariat accepts no liability in this area.

Adobe is a trademark of Adobe Systems Incorporated.

Details of the software products used to create this PDF file can be found in the General Info relative to the file; the PDF-creation parameters were optimized for printing. Every care has been taken to ensure that the file is suitable for use by ISO member bodies. In the unlikely event that a problem relating to it is found, please inform the Central Secretariat at the address given below.

© ISO 2006

All rights reserved. Unless otherwise specified, no part of this publication may be reproduced or utilized in any form or by any means, electronic or mechanical, including photocopying and microfilm, without permission in writing from either ISO at the address below or ISO's member body in the country of the requester.

ISO copyright office
Case postale 56 • CH-1211 Geneva 20
Tel. + 41 22 749 01 11
Fax + 41 22 749 09 47
E-mail copyright@iso.org
Web www.iso.org

Published in Switzerland

© ISO 2006 – All rights reserved

Copyright International Organization for Standardization
Provided by IHS under license with various National Standards Bodies
No reproduction or networking permitted without license from IHS

Licensee=Universita di Bologna/5930975001, User=bao, zhou
Not for Resale, 01/11/2017 18:44:19 MST

Contents

Page

Foreword iv

Introduction v

1 Scope 1

2 Terms and definitions 1

3 Abbreviated terms 3

4 OSI reference model 4

5 MDI specification 4
5.1 Physical medium 4
5.2 Physical signalling 8
5.3 Electrical specification 10
5.4 Network specification 12

6 Physical medium failure definition 14
6.1 Physical failures 14
6.2 Failure events 15

7 PMA specification 16
7.1 General 16
7.2 Timing requirements 16
7.3 Failure management 20
7.4 Operating modes 23

--`,``,,,,,`,`,`,``,`````,`-`-`,,`,,`,`,,`---

© ISO 2006 – All rights reserved

Copyright International Organization for Standardization
Provided by IHS under license with various National Standards Bodies
No reproduction or networking permitted without license from IHS

Licensee=Universita di Bologna/5930975001, User=bao, zhou
Not for Resale, 01/11/2017 18:44:19 MST

Foreword

ISO (the International Organization for Standardization) is a worldwide federation of national standards bodies (ISO member bodies). The work of preparing International Standards is normally carried out through ISO technical committees. Each member body interested in a subject for which a technical committee has been established has the right to be represented on that committee. International organizations, governmental and non-governmental, in liaison with ISO, also take part in the work. ISO collaborates closely with the International Electrotechnical Commission (IEC) on all matters of electrotechnical standardization.

International Standards are drafted in accordance with the rules given in the ISO/IEC Directives, Part 2.

The main task of technical committees is to prepare International Standards. Draft International Standards adopted by the technical committees are circulated to the member bodies for voting. Publication as an International Standard requires approval by at least 75 % of the member bodies casting a vote.

Attention is drawn to the possibility that some of the elements of this document may be the subject of patent rights. ISO shall not be held responsible for identifying any or all such patent rights.

ISO 11898-3 was prepared by Technical Committee ISO/TC 22, *Road vehicles*, Subcommittee SC 3, *Electrical and electronic equipment*.

This first edition of ISO 11898-3 cancels and replaces ISO 11519-2:1994, which has been technically revised.

ISO 11898 consists of the following parts, under the general title *Road vehicles — Controller area network (CAN)*:

— *Part 1: Data link layer and physical signalling*

— *Part 2: High-speed medium access unit*

— *Part 3: Low-speed, fault-tolerant, medium-dependent interface*

— *Part 4: Time triggered communication*

— *Part 5: High-speed medium access unit with low-power mode*

--`,``,,,,,`,`,`,``,``````,`-`-`,,`,,`,`,,`---

© ISO 2006 – All rights reserved

Copyright International Organization for Standardization
Provided by IHS under license with various National Standards Bodies
No reproduction or networking permitted without license from IHS

Licensee=Universita di Bologna/5930975001, User=bao, zhou
Not for Resale, 01/11/2017 18:44:19 MST

Introduction

ISO 11898, first published in November 1993, covered the controller area network (CAN) data link layer as well as the high-speed physical layer.

In the reviewed and restructured ISO 11898:

— ISO 11898-1 describes the data link layer protocol as well as the medium access control;

— ISO 11898-2 specifies the high-speed medium access unit (MAU) as well as the medium dependent interface (MDI).

ISO 11898-1:2003 and ISO 11898-2:2003 cancel and replace ISO 11898:1993.

In addition to the high-speed CAN, the development of the low-speed CAN, which was originally covered by ISO 11519-2, gained new means such as fault tolerant behaviour. The subject of this part of ISO 11898 is the definition and description of requirements necessary to obtain a fault tolerant behaviour as well as the specification of fault tolerance itself. In particular, it describes the medium dependent interface and parts of the medium access control.

© ISO 2006 – All rights reserved

Copyright International Organization for Standardization
Provided by IHS under license with various National Standards Bodies
No reproduction or networking permitted without license from IHS
Licensee=Universita di Bologna/5930975001, User=bao, zhou
Not for Resale, 01/11/2017 18:44:19 MST

Copyright International Organization for Standardization
Provided by IHS under license with various National Standards Bodies
No reproduction or networking permitted without license from IHS

Licensee=Universita di Bologna/5930975001, User=bao, zhou
Not for Resale, 01/11/2017 18:44:19 MST

Road vehicles — Controller area network (CAN) —

Part 3:
Low-speed, fault-tolerant, medium-dependent interface

1 Scope

This part of ISO 11898 specifies characteristics of setting up an interchange of digital information between electronic control units of road vehicles equipped with the controller area network (CAN) at transmission rates above 40 kBit/s up to 125 kBit/s. The CAN is a serial communication protocol which supports distributed control and multiplexing.

This part of ISO 11898 describes the fault tolerant behaviour of low-speed CAN applications, and parts of the physical layer according to the ISO/OSI layer model. The following parts of the physical layer are covered by this part of ISO 11898:

— medium dependent interface (MDI);

— physical medium attachment (PMA).

In addition, parts of the physical layer signalling (PLS) and parts of the medium access control (MAC) are also affected by the definitions provided by this part of ISO 11898.

All other layers of the OSI model either do not have counterparts within the CAN protocol and are part of the user's level or do not affect the fault tolerant behaviour of the low speed CAN physical layer and therefore are not part of this part of ISO 11898.

2 Terms and definitions

For the purposes of this document, the following terms and definitions apply.

2.1
bus
topology of a communication network where all nodes are reached by passive links which allow transmission in both directions

2.2
bus failure
failures caused by a malfunction of the physical bus such as interruption, short circuits

2.3
bus value
one of two complementary logical values: dominant or recessive

NOTE The dominant value represents a logical "0" the recessive represents a logical "1". During simultaneous transmission of dominant and recessive bits, the resulting bus value will be dominant.

2.4
bus voltage
voltage of the bus line wires CAN_L and CAN_H relative to ground of each individual CAN node

NOTE V_{CAN_L} and V_{CAN_H} denote the bus voltage.

--`,,,,,`,`,`

2.5
differential voltage
V_{diff}
voltage seen between the CAN_H and CAN_L lines

NOTE $V_{\text{diff}} = V_{\text{CAN_H}} - V_{\text{CAN_L}}$

2.6
fault free communication
mode of operation without loss of information

2.7
fault tolerance
ability to operate under specified bus failure conditions at least with a reduced performance

EXAMPLE Reduced signal to noise ratio.

2.8
transceiver loop time delay
delay time from applying a logical signal to the input on the logical side of the transceiver until it is detected on the output on the logical side of the transceiver

2.9
low power mode
operating mode with reduced power consumption

NOTE A node in low power mode does not disturb communication between other nodes.

2.10
node
assembly, connected to the communication line, capable of communicating across the network according to the given communication protocol specification

2.11
normal mode
operating mode of a transceiver which is actively participating (transmitting and/or receiving) in network communication

2.12
operating capacitance
C_{OP}
overall capacitance of bus wires and connectors seen by one or more nodes, depending on the topology and properties of the physical media

2.13
physical layer
electrical circuit realization that connects an ECU to the bus

2.14
physical medium (of the bus)
pair of wires, parallel or twisted, shielded or unshielded

NOTE The individual wires are denoted as CAN_H and CAN_L.

2.15
receiver
device that transforms physical signals used for the transmission back into logical information or data signals

© ISO 2006 – All rights reserved
Copyright International Organization for Standardization
Provided by IHS under license with various National Standards Bodies
No reproduction or networking permitted without license from IHS
Licensee=Universita di Bologna/5930975001, User=bao, zhou
Not for Resale, 01/11/2017 18:44:19 MST

2.16
transmitter
device that transforms logical information or data signals to electrical signals so that these signals can be transmitted via the physical medium

2.17
transceiver
device that adapts logical signals to the physical layer and vice versa

3 Abbreviated terms

ACK	Acknowledge
CAN	Controller Area Network
CRC	Cyclic Redundancy Check
CSMA	Carrier Sense Multiple Access
DLC	Data Length Code
ECU	Electronic Control Unit
EOF	End of Frame
FCE	Fault Confinement Entity
IC	Integrated Circuit
LAN	Local Area Network
LLC	Logical Link Control
LME	Layer Management Entity
LPDU	LLC Protocol Data Unit
LSB	Least Significant Bit
LSDU	LLC Service Data Unit
LS-MAU	Low-Speed Medium Access Unit
MAC	Medium Access Control
MAU	Medium Access Unit
MDI	Medium Dependent Interface
MPDU	MAC Protocol Data Unit
MSB	Most Significant Bit
MSDU	MAC Service Data Unit
NRZ	Non-Return-to-Zero
OSI	Open System Interconnection
PL	Physical Layer
PLS	Physical Layer Signalling
PMA	Physical Medium Attachment
RTR	Remote Transmission Request
SOF	Start of Frame

© ISO 2006 – All rights reserved

Copyright International Organization for Standardization
Provided by IHS under license with various National Standards Bodies
No reproduction or networking permitted without license from IHS
Licensee=Universita di Bologna/5930975001, User=bao, zhou
Not for Resale, 01/11/2017 18:44:19 MST

4 OSI reference model

According to the OSI reference model shown in Figure 1, the CAN architecture represents two layers:

— data link layer;

— physical layer.

This part of ISO 11898 describes the physical layer of a fault tolerant low-speed CAN transceiver. Only a few influences to the data link layer are given.

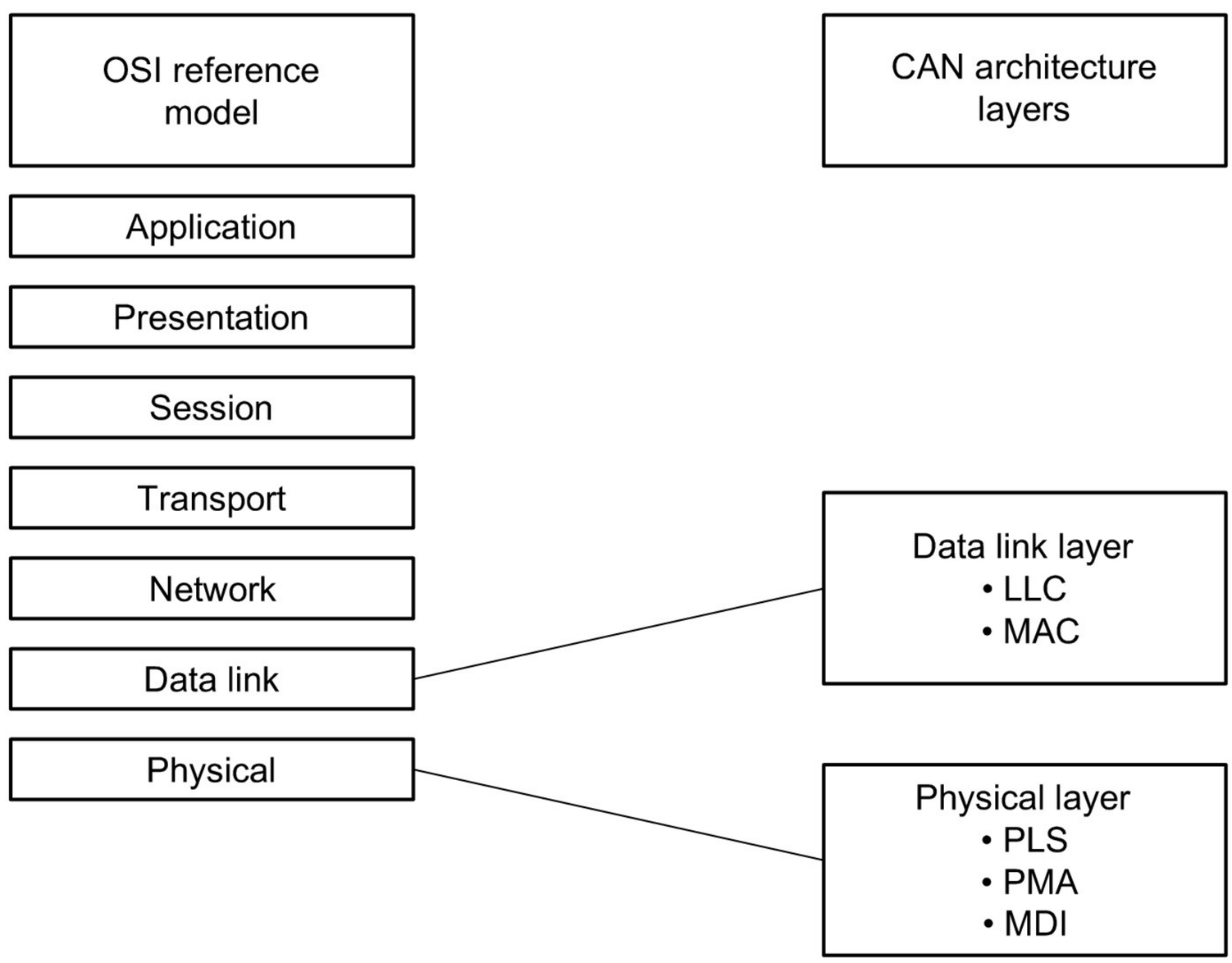

Figure 1 — OSI reference model/CAN layered architecture

5 MDI specification

5.1 Physical media

5.1.1 General

The physical media used for the transmission of CAN broadcasts shall be a pair of parallel (or twisted) wires, shielded or unshielded, dependent on EMC requirements. The individual wires are denoted as CAN_H and CAN_L. In dominant state, CAN_L has a lower voltage level than in recessive state, and CAN_H has a higher voltage level than in recessive state.

5.1.2 Node bus connection

The two wires CAN_H and CAN_L are terminated by a termination network, which shall be realized by the individual nodes themselves. The overall termination resistance of each line should be greater than or equal to 100 Ω. However, the termination resistor's value of a designated node should not be below 500 Ω, due to the semiconductor manufacturers' constraints. To represent the recessive state CAN_L is terminated to V_{CC} and CAN_H is terminated to GND. Figure 2 illustrates the normal termination of a designated bus node.

--`,,```,,,,,`,`,`,`,`,`,,,,,,,,,`,-`-`,,`,,`,`,,`---
© ISO 2006 – All rights reserved
Copyright International Organization for Standardization
Provided by IHS under license with various National Standards Bodies
No reproduction or networking permitted without license from IHS
Licensee=Universita di Bologna/5930975001, User=bao, zhou
Not for Resale, 01/11/2017 18:44:19 MST

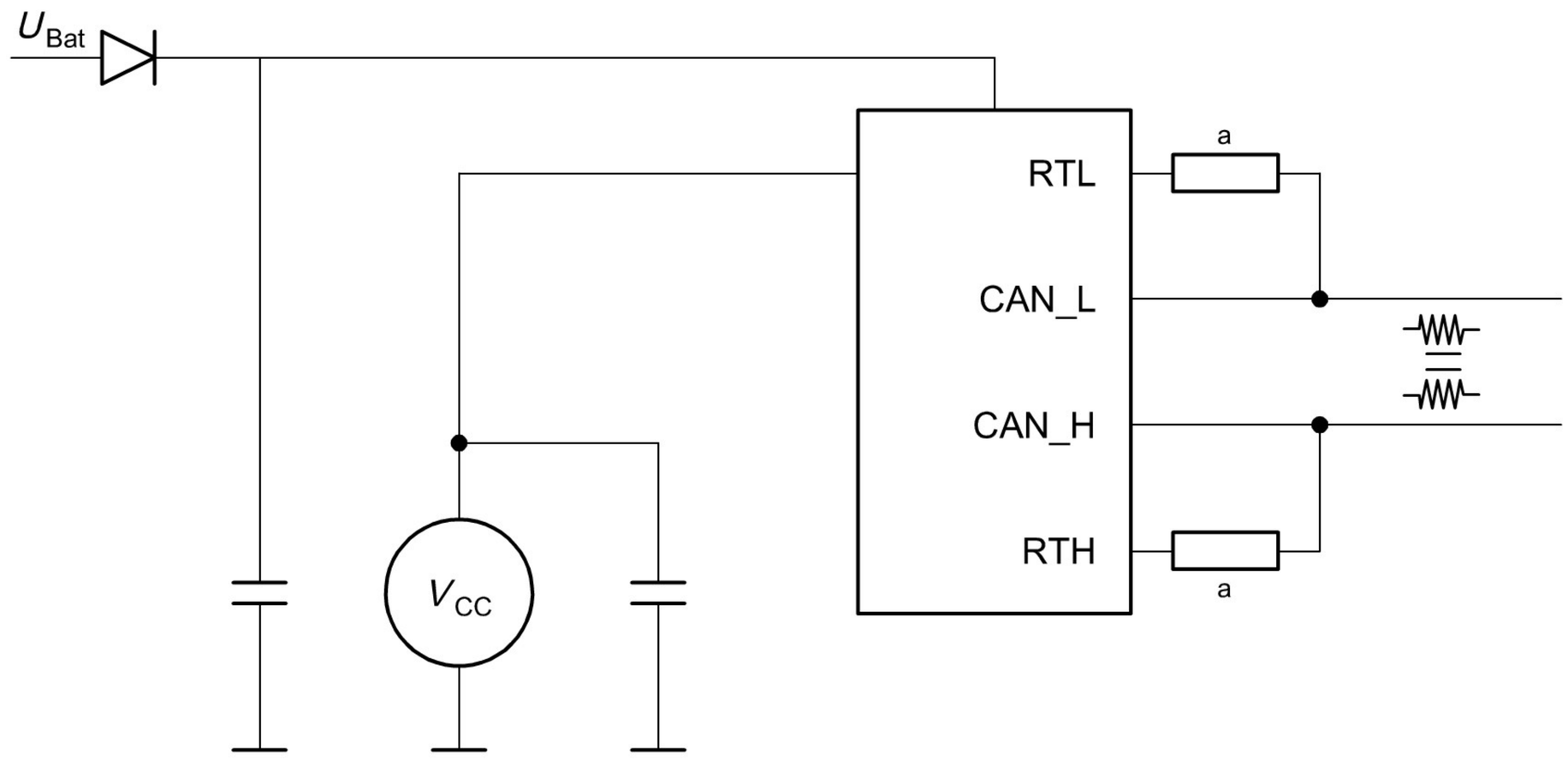

Key

a Optional.

Figure 2 — Termination of a single bus node

In Figure 2, the termination resistors are denoted as optional. That means that under certain conditions not all nodes need an individual termination, if the requirements of proper overall termination are fulfilled.

5.1.3 Operating capacitance

The following specifications are valid for a simple wiring model which in general is used in automotive applications. It consists of a pair of twisted copper cables which are connected in a topology described in 5.1.4. The following basic model shown in Figure 3 and 4 is used for the calculations.

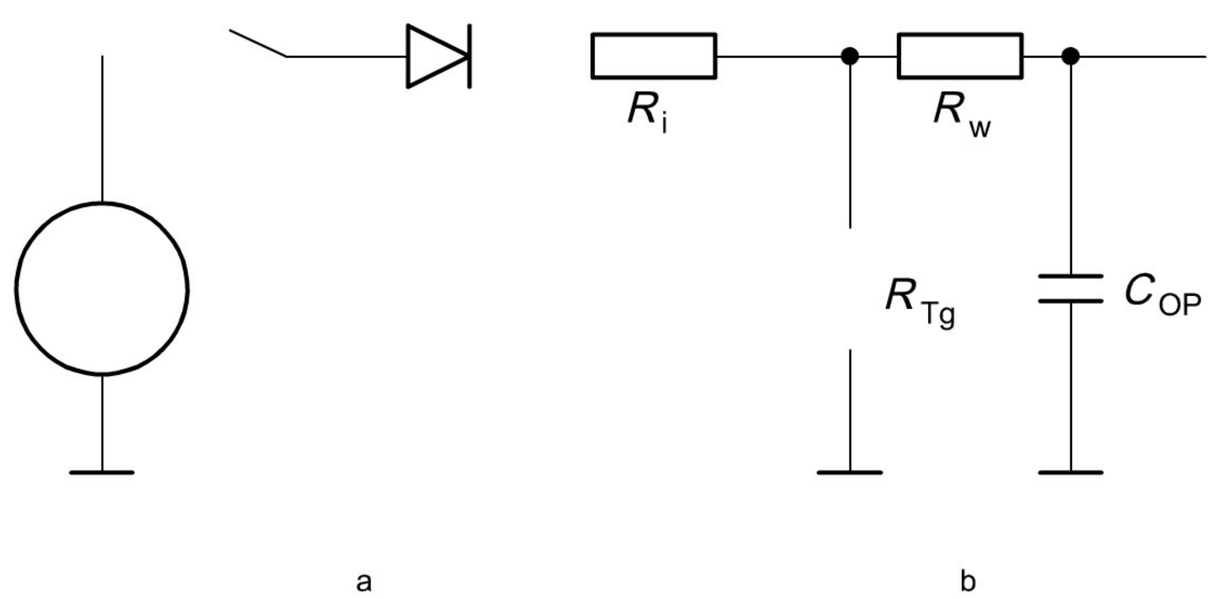

Key

a Driver.

b Wire.

Figure 3 — Substitute circuit for bus line

© ISO 2006 – All rights reserved

Copyright International Organization for Standardization
Provided by IHS under license with various National Standards Bodies
No reproduction or networking permitted without license from IHS
Licensee=Universita di Bologna/5930975001, User=bao, zhou
Not for Resale, 01/11/2017 18:44:19 MST

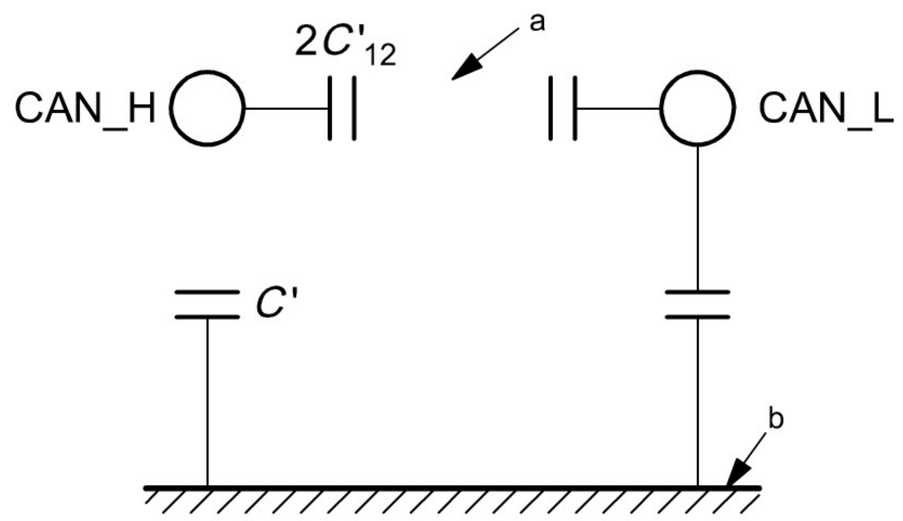

Key

a Symmetric axis.

b Ground.

Figure 4 — Operating capacitance referring to network length l

The operating capacitance is calculated using Equation 1.

$$C_{OP} = l\,(C' + 2C'_{12}) + n\,C_{node} + k\,C_{plug} \qquad (1)$$

where

C_{OP} is the operating capacitance;

C' is the capacitance between the lines and ground referring to the wire length in metres (m);

C'_{12} is the capacitance between the two wires (which is assumed to be symmetrical) referring to the wire length in metres (m);

C_{node} is the capacitance of an attached bus node seen from the bus side;

C_{plug} is the capacitance of one connecting plug;

l is the overall network cable length;

n is the number of nodes;

k is the number of plugs.

EXAMPLE A typical value for the operating capacitance referring to the overall network cable length in respect to the exemplary network described below is given by:

$$(C' + 2C'_{12}) = 120\ [\text{pF/m}]$$

5.1.4 Medium timing

The maximum allowed operating capacitance is limited by network inherent parameters such as:

— overall termination resistance R_{term};

— wiring model and topology;

— communication speed;

— sample point and voltage thresholds;

— ground shift, etc.

© ISO 2006 – All rights reserved
Copyright International Organization for Standardization
Provided by IHS under license with various National Standards Bodies
No reproduction or networking permitted without license from IHS
Licensee=Universita di Bologna/5930975001, User=bao, zhou
Not for Resale, 01/11/2017 18:44:19 MST

The following equation provides a method to estimate the maximum allowed operating capacitance.

$$R_{\text{term}}\, C_{\text{OP}} = \tau_{\text{C}} = \frac{\dfrac{s_{\text{p}}}{f_{\text{bit}}} - 2t_{\text{l}} - t_{\text{sync}}}{\ln(V_0 + V_{\text{GND}}) - \ln V_{\text{th}}} \tag{2}$$

where

R_{term} is the overall network termination resistor (approx. 120 Ω);

C_{OP} is the operating capacitance, specified in Equation (1);

τ_{C} is the time constant of bus wire;

s_{p} is the sampling point within a bit, in percent (%);

f_{bit} is the bit frequency or physical communication speed in bits per second (bit/s);

t_{l} is the overall loop delay time of a transceiver device;

t_{sync} is the maximum possible synchronization delay between two nodes;

V_0 is the maximum voltage level of a bus line (approx. 5 V);

V_{th} is the sampling voltage threshold (approx. < 0,5 V);

V_{GND} denotes the maximum allowed effective groundshift (max. 3 V).

The calculation of τ_{C} leads to the graph in Figure 5.

© ISO 2006 – All rights reserved

Copyright International Organization for Standardization
Provided by IHS under license with various National Standards Bodies
No reproduction or networking permitted without license from IHS

Licensee=Universita di Bologna/5930975001, User=bao, zhou
Not for Resale, 01/11/2017 18:44:19 MST

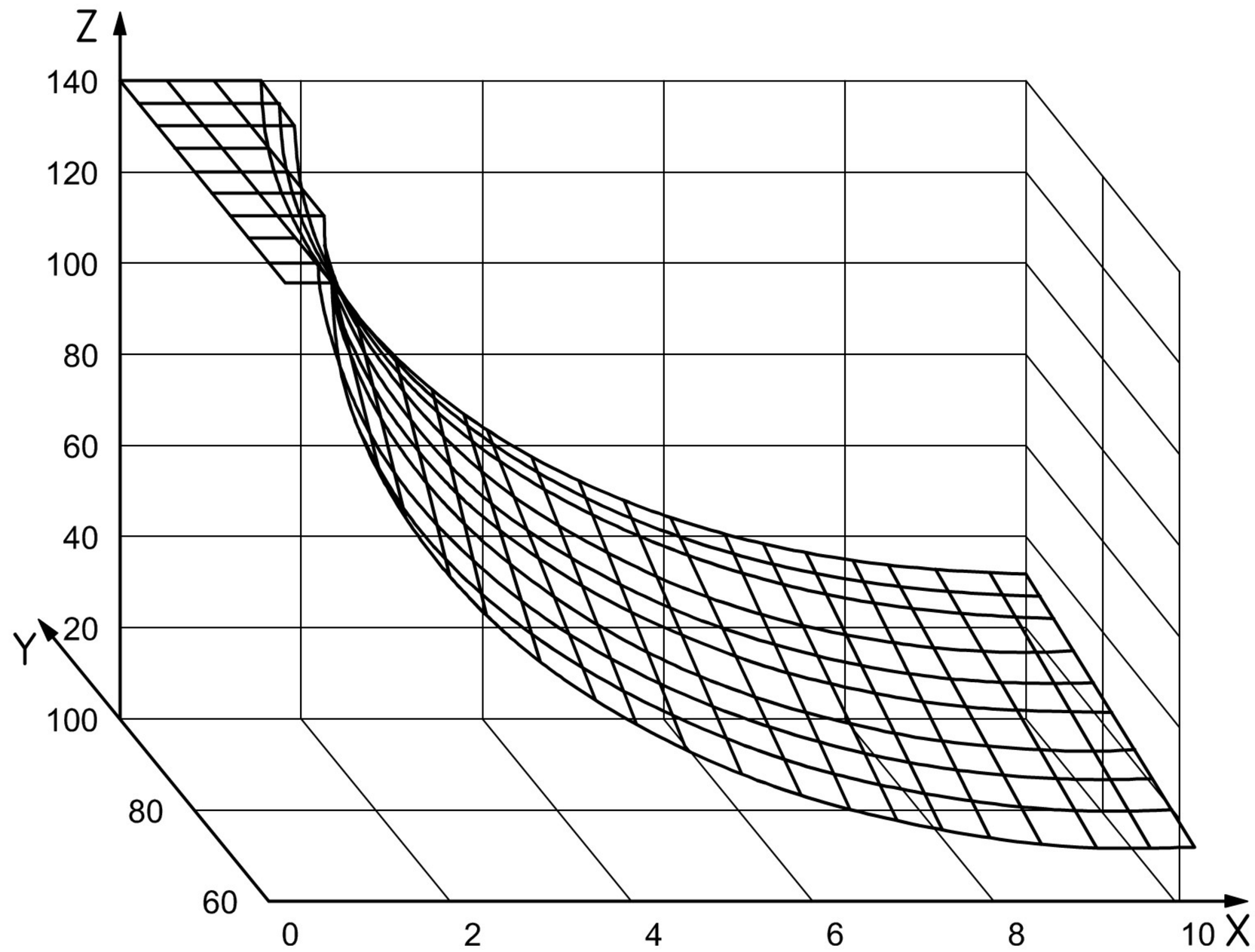

Key

X τ_C (µs)

Y sample point (%)

Z communication speed (kBit/s)

Conditions:

V_0 is assumed to 5 V.

V_{th} is assumed to 0,2 V.

No groundshift is assumed.

The total internal loop delay is assumed to 1,5 µs.

Figure 5 — Maximum communication speed versus τ_C and the sample point

As a rule of thumb, the possible maximum time constant τ_C can be calculated using Equation (3).

$$\tau_C \leqslant \frac{1}{6 f_{bit}} \tag{3}$$

where f_{bit} denotes the bit frequency or physical communication speed in bit/s.

5.2 Physical signalling

The bus line can have one of the two logical states recessive and dominant (see Figure 6). To distinguish between both states a differential voltage $\tilde{V}$ is used.

$$\tilde{V}_{diff} = V_{CAN_H} - V_{CAN_L} \tag{4}$$

© ISO 2006 – All rights reserved
Copyright International Organization for Standardization
Provided by IHS under license with various National Standards Bodies
No reproduction or networking permitted without license from IHS
Licensee=Universita di Bologna/5930975001, User=bao, zhou
Not for Resale, 01/11/2017 18:44:19 MST

where

$V_{\text{CAN_H}}$ is the voltage level of the CAN_H wire;

$V_{\text{CAN_L}}$ is the voltage level of the CAN_L wire.

In recessive state the CAN_L line is fixed to a higher voltage level than the CAN_H line. In general, this leads to a negative differential voltage $\tilde{V}_{\text{diff}}$. The recessive state is transmitted during bus idle or during recessive bits.

The dominant state is represented by a positive differential voltage $\tilde{V}_{\text{diff}}$, which means that the CAN_H line is actively fixed to a higher voltage level and the CAN_L line is actively fixed to a lower voltage level. The dominant state overrides a recessive state and is transmitted during dominant bits.

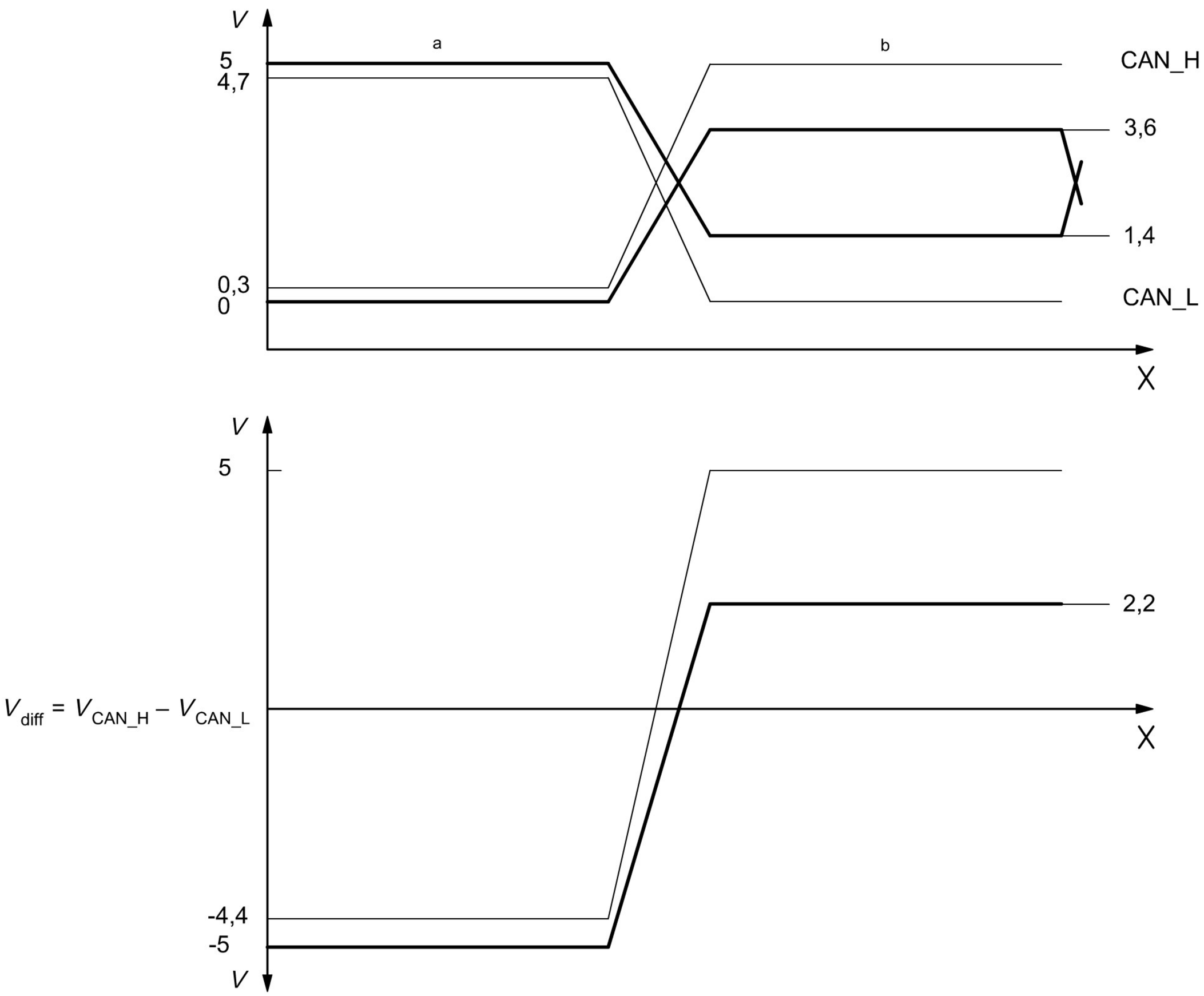

Key

a Recessive.

b Dominant.

Figure 6 — Physical bit representation

--`,``,,,,,`,`,`,``,`````,`-`-`,,`,,`,`,,`---

© ISO 2006 – All rights reserved

Copyright International Organization for Standardization
Provided by IHS under license with various National Standards Bodies
No reproduction or networking permitted without license from IHS

Licensee=Universita di Bologna/5930975001, User=bao, zhou
Not for Resale, 01/11/2017 18:44:19 MST

5.3 Electrical specification

5.3.1 Electrical boundary voltages for ECU

The parameters given in Table 1 should be valid for maximum node connecting voltages.

Table 1 — Ratings of V_{CAN_L} and V_{CAN_H} of an ECU in 12 V and 42 V systems

Notation		Voltage	
		min. [a] V	max. V
12 V system	V_{CAN_L}	–27,0	40,0
	V_{CAN_H}	–27,0	40,0
42 V system	V_{CAN_L}	–58,0	58,0
	V_{CAN_H}	–58,0	58,0
No destruction of transceiver occurs. The transceiver should not affect communication on the net. The voltage levels may be applied without time restrictions.			
[a] Possible if V_{GND} is disconnected or during jump start conditions.			

The common mode bus voltage, V_{COM}, is:

$$V_{COM} = \frac{V_{CAN_L} + V_{CAN_H}}{2} \tag{5}$$

where

V_{CAN_L} is the CAN_L wire voltage level;

V_{CAN_H} is the CAN_H wire voltage level.

The common mode voltage, V_{COM}, for an undisturbed system in normal mode must be ensured within the ratings specified in Table 2.

Table 2 — Common mode voltage, for undisturbed system in normal mode

Parameter	Notation	Unit	Value		
			min.	nominal	max.
Common mode voltage	V_{COM}	V	–1	2,5	6

5.3.2 DC parameters for physical signalling

See Tables 3 to 5.

© ISO 2006 – All rights reserved
Copyright International Organization for Standardization
Provided by IHS under license with various National Standards Bodies
No reproduction or networking permitted without license from IHS
Licensee=Universita di Bologna/5930975001, User=bao, zhou
Not for Resale, 01/11/2017 18:44:19 MST

Table 3 — DC parameters for the recessive state of an ECU connected to the termination network via bus line

Parameter	Notation	Unit	Value		
			min.	nominal	max.
Bus voltage	V_{CAN_L}	V	V_{CC} – 0,3 [a]	—	—
	V_{CAN_H}	V	—	—	0,3
Differential bus voltage [b]	V_{diff}	V	$-V_{CC}$	—	$-V_{CC}$ + 0,6

[a] VCC is nominal 5 V.

[b] The differential voltage is determined by the input load of all ECUs during the recessive state. Therefore, V_{diff} decreases slightly as the number of ECUs connected to the bus increases.

Table 4 — DC parameters for the dominant state of an ECU connected to the termination network via bus line

Parameter	Notation	Unit	Value		
			min.	nominal	max.
Bus voltage	V_{CAN_L}	V	—	—	1,4
	V_{CAN_H}	V	V_{CC} – 1,4 [a]	—	—
Differential bus voltage	V_{diff}	V	V_{CC} – 2,8	—	V_{CC}

[a] V_{CC} is nominal 5 V.

Table 5 — DC parameters for the low power mode of an ECU connected to the termination network via bus line

Parameter	Notation	Unit	Value		
			min.	nominal	max.
Bus voltage	V_{CAN_L}	V	5	—	—
	V_{CAN_H}	V	—	—	1

5.3.3 DC parameters for comparators

See Tables 6 and 7.

Table 6 — DC threshold of dominant, recessive and failure detection in normal mode and vice versa

Parameter	Notation	Unit	Value		
			min.	nominal	max.
Single ended bus receiver	$V_{thCAN_L_N}$	V	2,5	—	3,9
	$V_{thCAN_H_N}$	V	1,5	—	2,3
Differential bus receiver	V_{thDiff_N}	V	–3,9	—	–2,5
CAN_L to BAT detector	$V_{thLxBAT_N}$	V	6,5	—	8,0
CAN_H to BAT detector	$V_{thHxBAT_N}$	V	6,5	—	8,0

© ISO 2006 – All rights reserved

Copyright International Organization for Standardization
Provided by IHS under license with various National Standards Bodies
No reproduction or networking permitted without license from IHS
Licensee=Universita di Bologna/5930975001, User=bao, zhou
Not for Resale, 01/11/2017 18:44:19 MST

Table 7 — DC threshold for wake-up and failure detection in low power mode

Parameter	Notation	Unit	Value		
			min.	nominal	max.
Wake-up threshold	$V_{th(wake)L}$	V	2,5	3,2	3,9
	$V_{th(wake)H}$	V	1,1	1,8	2,5
Wake-up threshold difference	$\Delta V_{th(wake)}$	V	0,8	1,4	—

5.4 Network specification

5.4.1 Network topology

Individual CAN nodes can be connected to a communication network either by a bus or star topology (see Figures 7 and 8).

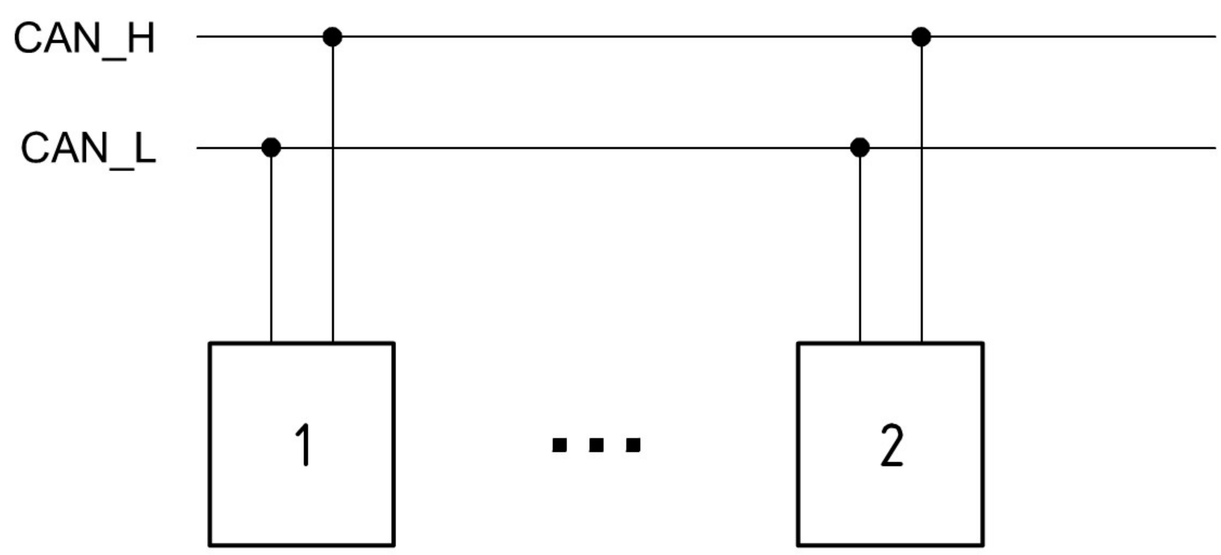

Key

1 node 1

2 node 2

Figure 7 — Connecting model; bus structure with stub lines

However, for any connecting concept, the following requirements shall be fulfilled, in order to provide the fault tolerant means:

— The overall network termination resistor shall be in a range of about 100 Ω (but not less than 100 Ω). For a detailed description of the termination concept please refer to 5.4.2.

— The maximum possible number of participating nodes should not be less than 20 (at 125 kBit/s and a overall network length of 40 m). The actual number of nodes varies due to communication speed, capacitive network load, overall line length, network termination concept, etc.

— To provide a maximum communication speed of 125 kBit/s, the overall network length should not exceed 40 m. However, it is possible to increase the overall network length by reducing the actual communication speed.

© ISO 2006 – All rights reserved
Copyright International Organization for Standardization
Provided by IHS under license with various National Standards Bodies
No reproduction or networking permitted without license from IHS
Licensee=Universita di Bologna/5930975001, User=bao, zhou
Not for Resale, 01/11/2017 18:44:19 MST

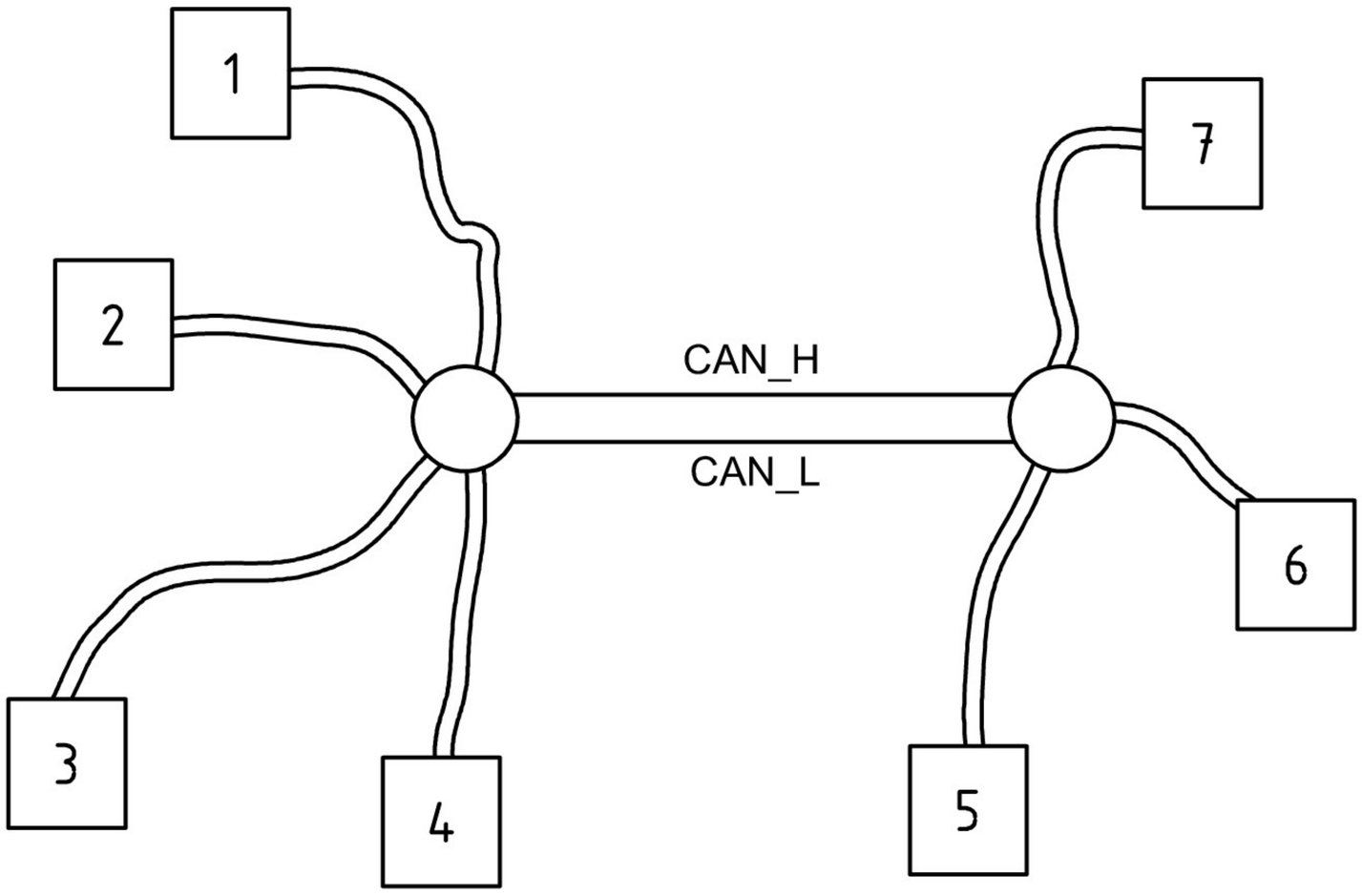

Key

1 node 1
2 node 2
3 node 3
4 node 4
5 node 5
6 node 6
7 node n

Figure 8 — Connecting model, star point structure

For a star point configuration, some additional constraints are given by the following:

— The individual nodes are connected to one or more “passive” star points, which themselves are connected via a normal bus structure.

— Even some connecting lines (star connector to node) might be extended to several meters; no stub lines are recommended.

— Both the overall network length (all star connection line lengths added) and the maximum node to node distance affect the network communication.

EXAMPLE For most of the examples given in this part of ISO 11898, the following network topology is used:

— The star point connection method is with two star points.

— The network is terminated with an overall resistance of 100 Ω.

— The node number is about 20.

— The overall network length is about 40 m.

— The maximum node to node distance is 20 m.

— The wire capacitance related to the length is about 120 pF/m.

© ISO 2006 – All rights reserved

Copyright International Organization for Standardization
Provided by IHS under license with various National Standards Bodies
No reproduction or networking permitted without license from IHS
Licensee=Universita di Bologna/5930975001, User=bao, zhou
Not for Resale, 01/11/2017 18:44:19 MST

5.4.2 Network termination

5.4.2.1 General

The recessive bus level described in 5.2 is maintained by the bus termination. The dominant bus level overrides actively this recessive bus state. The transition between the dominant to recessive level is done by the termination, too. However, there is no designated termination network or circuit. Moreover, the termination is attached to most of the participating nodes.

5.4.2.2 Termination modes

In principle, there are two major termination modes:

— normal mode termination, and

— low power mode termination.

Due to the failure management described in 7.2, the actual bus termination depends on the actual failure mode a transceiver operates in.

To represent the recessive state, the CAN_H line is terminated to ground (using a pull down resistor) in either modes (normal and low power).

In normal power mode, the CAN_L line is terminated to V_{CC}, using a pull up resistor. In low power mode, however, the CAN_L line is terminated to V_{Bat} by transceiver internal switching of the “high” end of the termination resistor.

5.4.2.3 Termination concept

The termination is provided by connecting the CAN_L line to the RTL pins of the transceiver devices and by connecting the CAN_H line to the RTH pins (see Figure 2).

By connecting the termination pins, the following requirements shall be considered:

— The overall network termination resistor of one line (all parallel resistors connected to RTL or RTH pins) shall be about 100 Ω, due to in-circuit current limitations and CAN voltages.

— A single resistor connected to an individual transceiver device should not be below 500 Ω, due to in circuit current limitations.

It is recommended that every node provide its own termination resistors. However, this is not a strict requirement. A not-well-terminated node might be sensitive to false wake-up signals if a broken line error had occurred.

6 Physical medium failure definition

6.1 Physical failures

The physical failures specified in Table 8 shall be treated by a fault tolerant transceiver device.

© ISO 2006 – All rights reserved
Copyright International Organization for Standardization
Provided by IHS under license with various National Standards Bodies
No reproduction or networking permitted without license from IHS
Licensee=Universita di Bologna/5930975001, User=bao, zhou
Not for Resale, 01/11/2017 18:44:19 MST

6.2 Failure events

6.2.1 General

The transceiver device does not react to the physical failures, but to the way they influence the bus wire system. These failure images are called “failure events”. They can be divided into two major groups:

— power failures; and

— bus wire failures.

In general, the detection of failure events causes the transceiver device to perform an internal state switch.

6.2.2 Power failures

If one node loses ground connection (or is affected by a ground shift greater than the defined limitations of ± 1,5 V) or a proper voltage supply (either V_{CC} or V_{Bat}), this failure is treated as a power failure.

6.2.3 Bus wire failures

Not all bus wire failures (open and short failures in Table 8) can be distinguished by the transceiver device. Hence, a reduced set of failure events is specified (see Table 9).

Table 8 — Physical failures

Description of bus failure	Behaviour of the network
One node becomes disconnected from the bus [a]	The remaining nodes continue communication.
One node loses power [b]	The remaining nodes continue communicating at least with reduced signal to noise ratio.
One node loses ground [b]	The remaining nodes continue communicating at least with reduced signal to noise ratio.
Open and short failures	All nodes continue communicating at least with reduced signal to noise ratio.
CAN_L interrupted [e]	All nodes continue communicating at least with reduced signal to noise ratio.
CAN_H interrupted [e]	All nodes continue communicating at least with reduced signal to noise ratio.
CAN_L shorted to battery voltage [c]	All nodes continue communicating at least with reduced signal to noise ratio.
CAN_H shorted to ground [c e]	All nodes continue communicating at least with reduced signal to noise ratio.
CAN_L shorted to ground [c]	All nodes continue communicating at least with reduced signal to noise ratio.
CAN_H shorted to battery voltage [c]	All nodes continue communicating at least with reduced signal to noise ratio.
CAN_L wire shorted to CAN_H wire [d]	All nodes continue communicating at least with reduced signal to noise ratio.
CAN_L and CAN_H interrupted at the same location [a]	No operation within the complete system. Nodes within the remaining subsystems might continue communicating.

[a] Due to the distributed termination concept, these failures do not affect the remaining communication and are not detectable by a transceiver device. Hence, they are not treated and are not part of this part of ISO 11898.

[b] Both failures are treated together as power failures.

[c] Short circuit failures might occur in coincidence with a ground shift (seen between two nodes) in a range of ± 1,5V.

[d] This failure is covered by the detection of the failure “CAN_L shorted to ground”.

[e] These failures do not cause any corrective action within the transceiver and are tolerated implicitly.

© ISO 2006 – All rights reserved

Copyright International Organization for Standardization
Provided by IHS under license with various National Standards Bodies
No reproduction or networking permitted without license from IHS
Licensee=Universita di Bologna/5930975001, User=bao, zhou
Not for Resale, 01/11/2017 18:44:19 MST

Table 9 — Failure events

Event name [a]	Description
CANH2UBAT	Failure that typically occurs when the CAN_H wire is short circuited to the battery voltage V_{Bat}.
CANH2VCC	Failure that typically occurs when the CAN_H wire is short circuited to the supply voltage V_{CC}.
CANL2UBAT	Failure that typically occurs when the CAN_L wire is short circuited to the battery voltage V_{Bat}.
CANL2GND	Failure that typically occurs when the CAN_L wire is short circuited to ground.
[a] The failure event names may occur with the indices N (for normal mode) and LP (for low power mode).	

7 PMA specification

7.1 General

The physical medium attachment specification describes requirements an ECU and especially the transceiver device participating at CAN network communication should provide.

7.2 Timing requirements

7.2.1 General

To enable maximum communication speed at maximum line length, the internal loop time of a transceiver device is limited. Hence, a transceiver device shall fulfil given constraints under all possible failure conditions.

7.2.2 Constraints

Figure 9 shows the necessary timing requirements, where:

— Tx,s denotes the digital input signal of the sending node;

— Rx,s denotes the digital output signal of the sending node (read back of bus line);

— Rx,d denotes the digital output signal of the destination node;

— CAN_L and CAN_H denote the physical signal on the wire.

Both transitions recessive to dominant (a → b) as well as dominant to recessive (b → a) shall fulfil certain timing requirements.

© ISO 2006 – All rights reserved
Copyright International Organization for Standardization
Provided by IHS under license with various National Standards Bodies
No reproduction or networking permitted without license from IHS
Licensee=Universita di Bologna/5930975001, User=bao, zhou
Not for Resale, 01/11/2017 18:44:19 MST

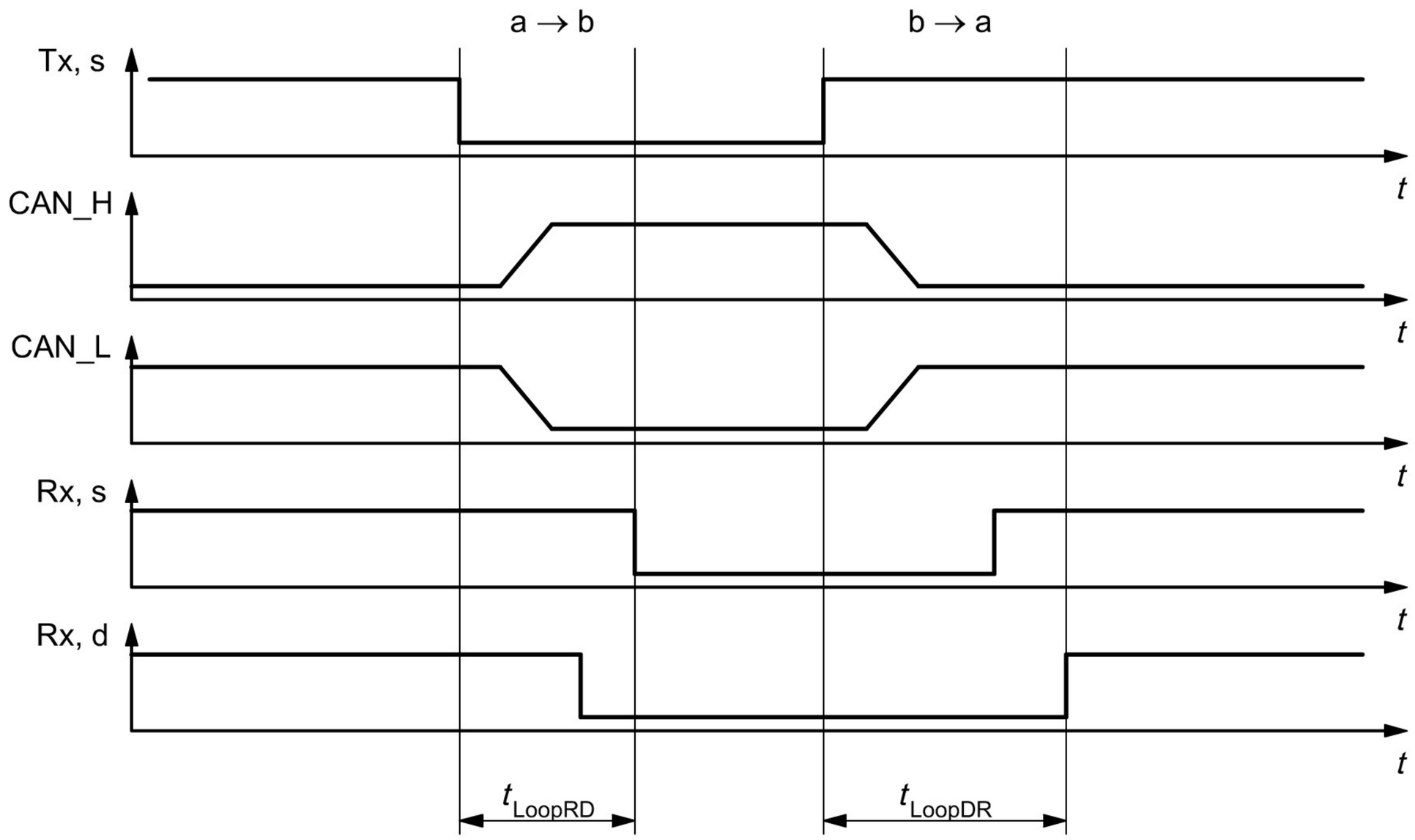

Key

a Recessive.

b Dominant.

Figure 9 — Timing example, differential operation without GND shift

7.2.3 Measurement circuit, loop delay

A transceiver shall guarantee a maximum loop delay for signals, which are applied to the Tx input. The loop delay is defined by the times t_{LoopRD} and t_{LoopDR} according to Figure 9 and is measured according to Figure 10.

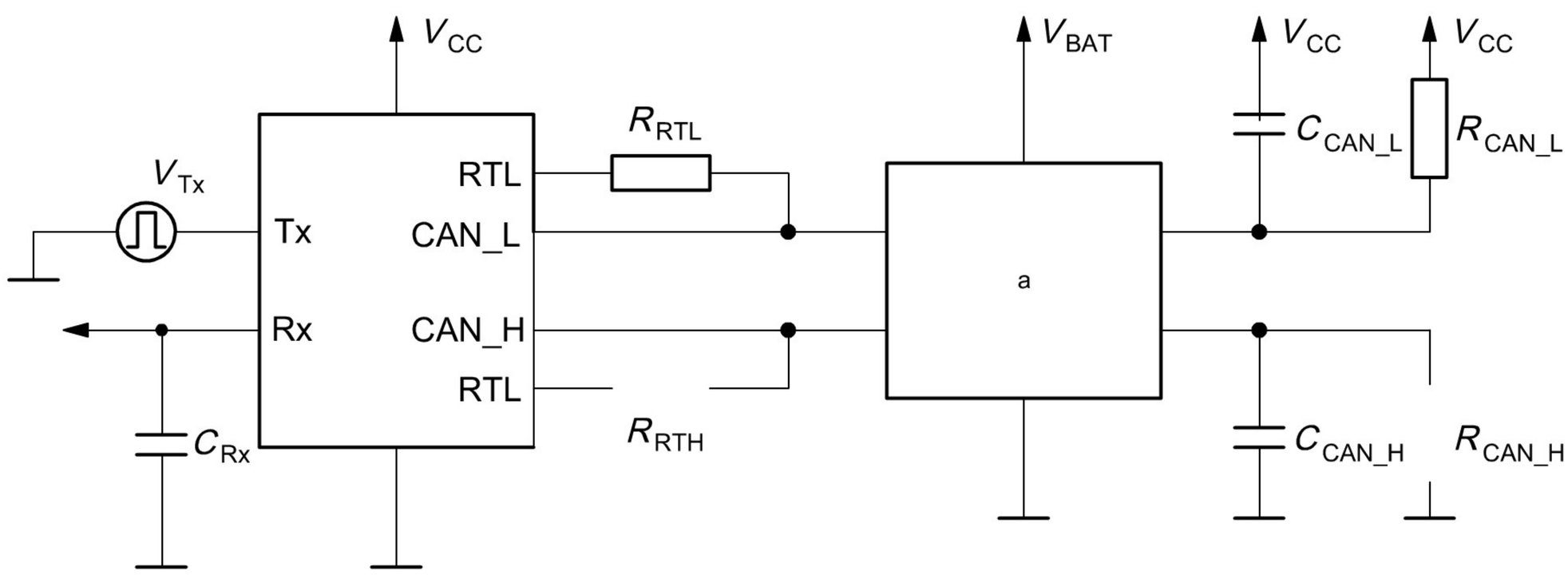

Key

a Failure generation.

Figure 10 — Test method for transceiver timing measurement

--`,``,,,,,`,`,`,`,``,```````,`-`-`,,`,,`,`,,`---

Copyright International Organization for Standardization
Provided by IHS under license with various National Standards Bodies
No reproduction or networking permitted without license from IHS
Licensee=Universita di Bologna/5930975001, User=bao, zhou
Not for Resale, 01/11/2017 18:44:19 MST

Table 10 — Loop delay of a single transceiver

Failure case	t_{LoopRD}; t_{LoopDR}	Condition
No failure	max. 1,5 µs	V_{TX} rectangular signal with 50 kHz and 50 % duty cycle, slope time < 10 ns, C_{RX} = 10 pF, R_{RTL} = R_{RTH} = 500 Ω, C_{CAN_L} = C_{CAN_H} = 1nF, R_{CAN_L} = R_{CAN_H} = 125 Ω
All failures except CAN_L shorted to CAN_H	max. 1,9 µs	
CAN_L shorted to CAN_H	max. 1,9 µs	V_{TX} rectangular signal with 50 kHz and 50 % duty cycle, slope time < 10 ns, C_{RX} = 10 pF, R_{RTL} = R_{RTH} = 500 Ω, C_{CAN_L} = C_{CAN_H} = 1 nF, R_{CAN_H} = 125 Ω; R_{CAN_L} > 1 MΩ

7.2.4 Measurement circuit, GND shift capability

Figure 11 illustrates the functional test circuit, which is used to check the ground shift requirements. The test circuit allows applying different failure cases in combination with a local GND shift in positive and negative direction. The wiring harness between the nodes shall stay as short as possible and shall not exceed 1 m in total. Depending on the applied failure case, the transceiver operates in three main states:

— differential driver and receiver;

— single line operation on CAN_L line; and

— single line operation on CAN_H line.

According the set-up shown in Figure 11, the following bus failure cases shall be applied in combination with a GND shift of up to ± 1,5 V:

— no failure;

— CAN_L wire interrupted;

— CAN_H wire interrupted;

— CAN_L shorted to V_{Bat};

— CAN_H shorted to GND;

— CAN_L shorted to GND;

— CAN_H shorted to V_{Bat}; and

— CAN_L shorted to CAN_H.

Independently from the applied bus failure and ground shift scenario, all Rx signals shall represent the driven Tx pattern correctly.

© ISO 2006 – All rights reserved
Copyright International Organization for Standardization
Provided by IHS under license with various National Standards Bodies
No reproduction or networking permitted without license from IHS
Licensee=Universita di Bologna/5930975001, User=bao, zhou
Not for Resale, 01/11/2017 18:44:19 MST

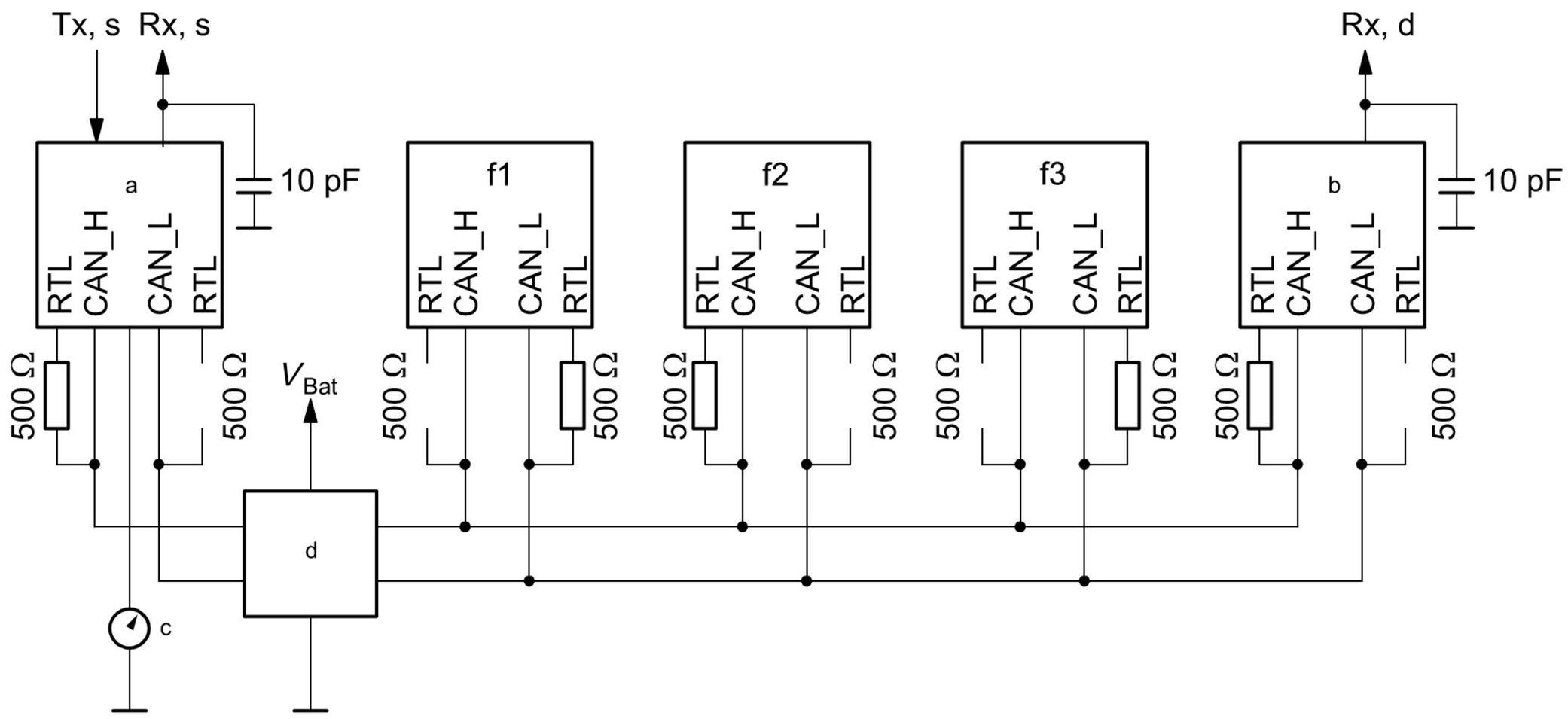

Key

a Source node.

b Destination node.

c Ground shift.

d Bus failure.

f1 Bus load.

f2 Bus load.

f3 Bus load.

Figure 11 — Test method for transceiver ground shift requirements

© ISO 2006 – All rights reserved

Copyright International Organization for Standardization
Provided by IHS under license with various National Standards Bodies
No reproduction or networking permitted without license from IHS
Licensee=Universita di Bologna/5930975001, User=bao, zhou
Not for Resale, 01/11/2017 18:44:19 MST

7.3 Failure management

7.3.1 Failure detection

To cope with the failures specified in Clause 6, the scheme listed in Tables 11 and 12 shall be used.

Table 11 — Normal mode event failure detection scheme

Event [a]	State [b]	Threshold	Timing [e]
$CANH2UBAT_N$ [c]	D	CAN_H > $V_{thHxBAT_N}$	> 7 µs
	R	CAN_H < $V_{thHxBAT_N}$	> 125 µs
$CANH2VCC_N$	D	CAN_H > $V_{thCAN_H_N}$	> 1,6 ms
	R	CAN_H < $V_{thCAN_H_N}$	> t_{bit} × 12 ms
$CANL2UBAT_N$	D	CAN_L > $V_{thLxBAT_N}$	> 7 µs
	R	CAN_L < $V_{thLxBAT_N}$	> 125 µs
$CANL2GND_N$ [d]	D	$V_{diff} > V_{thDiff_N}$	> t_{bit} × 12 < 1,6 ms
	R	$V_{diff} < V_{thDiff_N}$	> 7 µs
$CANL2UBAT_VER_N(1)$ [f]	D	Tx dominant and CAN_L > $V_{thCAN_L_N}$	3 µs < t < 40 µs
$CANL2UBAT_VER_N(2)$ [g]	D	Max 2 Tx dominant to recessive edges with CAN_L > $V_{thCAN_L_N}$	—

[a] See Table 9 for explanations.

[b] D denotes “detection” and R denotes “recovery”.

[c] This failure may be considered to be optional, because the major error handling is possible by detecting the CANH2VCC failure.

[d] This failure detection also covers the CANH2CANL failure (mutually short circuit of both lines).

[e] Analogue failure detection and recovery timer implementations shall react upon consecutive input conditions only. The sample rate of digital timer implementations shall be faster than 4 µs.

[f] Implementation variant 1 for verification of $CANL2UBAT_N$ failure.

[g] Implementation variant 2 for verification of $CANL2UBAT_N$ failure.

© ISO 2006 – All rights reserved
Copyright International Organization for Standardization
Provided by IHS under license with various National Standards Bodies
No reproduction or networking permitted without license from IHS
Licensee=Universita di Bologna/5930975001, User=bao, zhou
Not for Resale, 01/11/2017 18:44:19 MST

Table 12 — Low power mode event failure detection scheme

Event [a]	State [b]	Threshold	Timing [e]
$CANH2UBAT_{LP}$ [c]	D	CANH > $V_{th(wake)H}$	> 7 µs
	R	CANH < $V_{th(wake)H}$	> 125 µs
$CANH2VCC_{LP}$	D	CANH > $V_{th(wake)H}$	> 1,6 ms
	R	CANH < $V_{th(wake)H}$	> t_{bit} × 12 ms
$CANL2UBAT_{LP}$	D	Not detected	
	R	Not detected	
$CANL2GND_{LP}$ [d]	D	CAN_H > $V_{th(wake)H}$ and/or CAN_L < $V_{th(wake)L}$	> 0,1 < 1,6 ms
	R	CAN_H < $V_{th(wake)H}$ or/and CAN_L > $V_{th(wake)L}$	> 7 µs

[a] See Table 9 for explanations.

[b] D denotes “detection” and R denotes “recovery”.

[c] This failure may be considered to be optional, because the major error handling is possible by detecting the CANH2VCC failure.

[d] This failure detection also covers the CANH2CANL failure (mutually short circuit of both lines).

[e] Analogue failure detection and recovery timer implementations shall react upon consecutive input conditions only. The sample rate of digital timer implementations shall be faster than 4 µs.

7.3.2 Failure treatment

7.3.2.1 Power failures

There are no explicit internal states on how to cope with power failures. A transceiver device should react in such a way to fulfil the requirements of the operating modes in 7.3.

7.3.2.2 Bus wire failures

The treatment of bus wire failures is represented using an internal state machine. There is no requirement that a transceiver device necessarily has to implement an internal state machine. However, the behaviour of the device shall be in agreement with the following specification.

Figure 12 shows the general used state diagram. The transitions are valid for normal and low power mode as they are denoted. However, it is possible that a transceiver device which is actually in low power mode wakes up into normal mode to perform a state transition if it felled back to low power mode afterwards.

The following state conventions are used in Figure 12:

— State 0: Normal operating state, no failure is detected, default state.

— State E1: CAN_L failure expected/detected.

— State E2: CAN_H failure detected.

--`,``,,,,,`,`,`,`,``,`````,`~~`,,`,`,`,,---

Copyright International Organization for Standardization
Provided by IHS under license with various National Standards Bodies
No reproduction or networking permitted without license from IHS
Licensee=Universita di Bologna/5930975001, User=bao, zhou
Not for Resale, 01/11/2017 18:44:19 MST

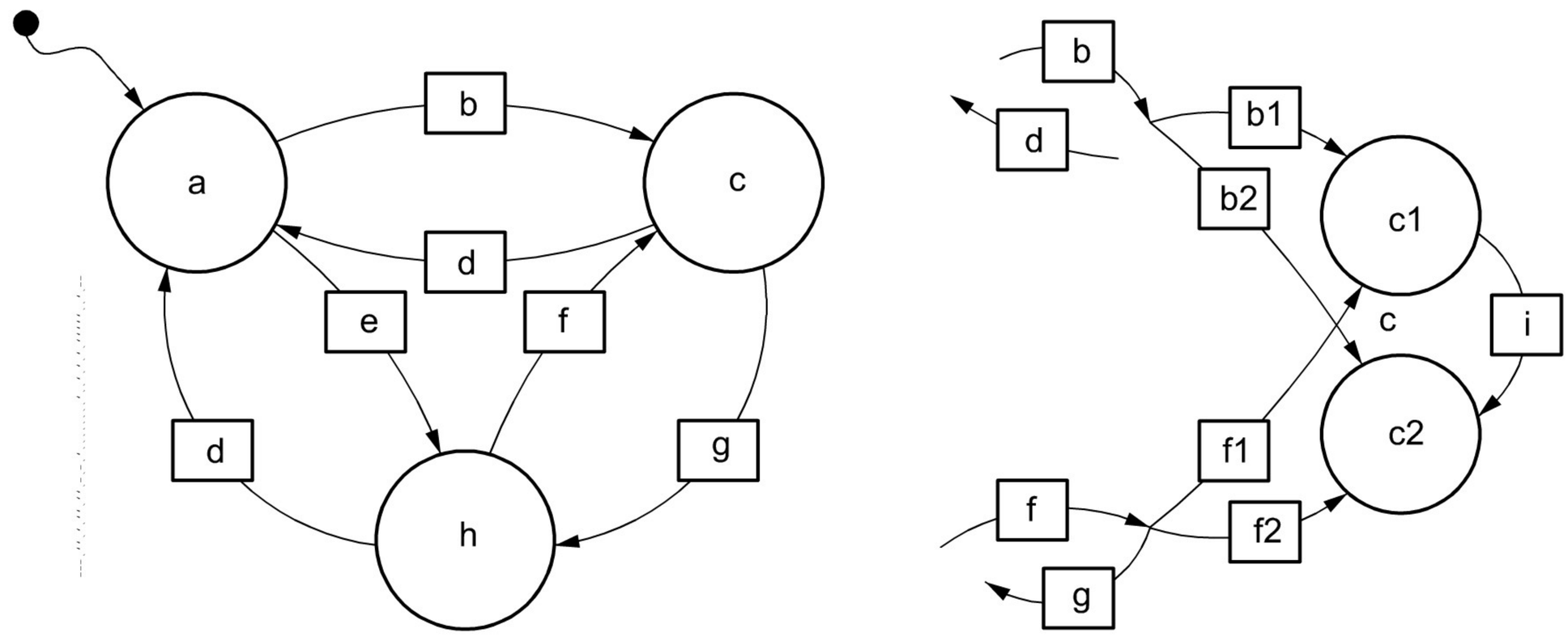

Key

a State 0: Normal operating state, no failure is detected, default state.

b $CANL2UBAT_N$ or $CANL2GND_{N/LP}$.

b1 $CANL2UBAT_N$.

b2 $CANL2GND_{N/LP}$.

c State E1: CAN_L failure expected/detected.

c1 State E1a: No CAN_L failure.

c2 State E1b: CAN_L failure detected.

d No failure.

e $CANH2VCC_{N/LP}$ or $CANH2UBAT_{N/LP}$.

f **NOT** ($CANH2VCC_{N/LP}$ or $CANH2UBAT_{N/LP}$) and ($CANL2GND_{N/LP}$ or $CANL2UBAT_N$).

f1 **NOT** ($CANH2VCC_{N/LP}$ or $CANH2UBAT_{N/LP}$) and $CANL2UBAT_N$.

f2 **NOT** ($CANH2VCC_{N/LP}$ or $CANH2UBAT_{N/LP}$) and $CANL2GND_{N/LP}$.

g $CANH2VCC_{N/LP}$ or $CANH2UBAT_{N/LP}$.

h State E2: CAN_H failure detected.

i $CANL2UBAT_VER_N(1)$ or $CANL2UBAT_VER_N(2)$.

Figure 12 — Internal CAN transceiver states

According to the states in Figure 12, the transceiver device switches its drivers, receivers and termination to different modes.

Tables 13 and 14 list the internal treatment of the bus wire failures for either normal mode and low power mode.

© ISO 2006 – All rights reserved
Copyright International Organization for Standardization
Provided by IHS under license with various National Standards Bodies
No reproduction or networking permitted without license from IHS
Licensee=Universita di Bologna/5930975001, User=bao, zhou
Not for Resale, 01/11/2017 18:44:19 MST

Table 13 — Normal mode state description

State	Drivers	Receivers	Termination
0	All drivers are switched on	Differential receivers on	CAN_H terminated to GND CAN_L terminated to V_{CC}
E1	Driver CAN_L is switched on or off	Single ended CAN_H receiver	CAN_H terminated to GND CAN_L weak V_{CC}
E1a	Driver CAN_L is switched on	Single ended CAN_H receiver OR Differential receiver OR CANH / CANL Single ended receivers	CAN_H terminated to GND CAN_L weak V_{CC} [a]
E1b	Driver CAN_L is switched off	Single ended CAN_H receiver	CAN_H terminated to GND CAN_L weak V_{CC}
E2	Driver CAN_H is switched off	Single ended CAN_L receiver	CAN_H weak GND CAN_L terminated to V_{CC}

[a] After a mode change from LP it is also allowed to terminate CAN_L to V_{CC}.

Table 14 — Low power mode state description

State	Drivers	Receivers	Termination
0	All drivers are switched off	Reduced to failure recognition	CAN_H terminated to GND CAN_L terminated to $\geqslant$ 5 V
E1	All drivers are switched off	Reduced to failure recognition	CAN_H terminated to GND CAN_L floating
E2	All drivers are switched off	Reduced to failure recognition	CAN_H floating CAN_L terminated to $\geqslant$ 5 V

7.4 Operating modes

7.4.1 General

The operating modes are specified according to the exemplary network in 5.1.4. They describe what a transceiver following this part of ISO 11898 shall cope with. These operating modes will be covered by the conformance test.

7.4.2 Open wire failures

A transceiver according to this part of ISO 11898 should be able to cope with open wire failures under all conditions. That means the communication should continue whether there is an detectable failure or not.

Figure 13 illustrates the operating modes for the both open wire failures, and the failure states.

--`,,`,,,,,`,`,`

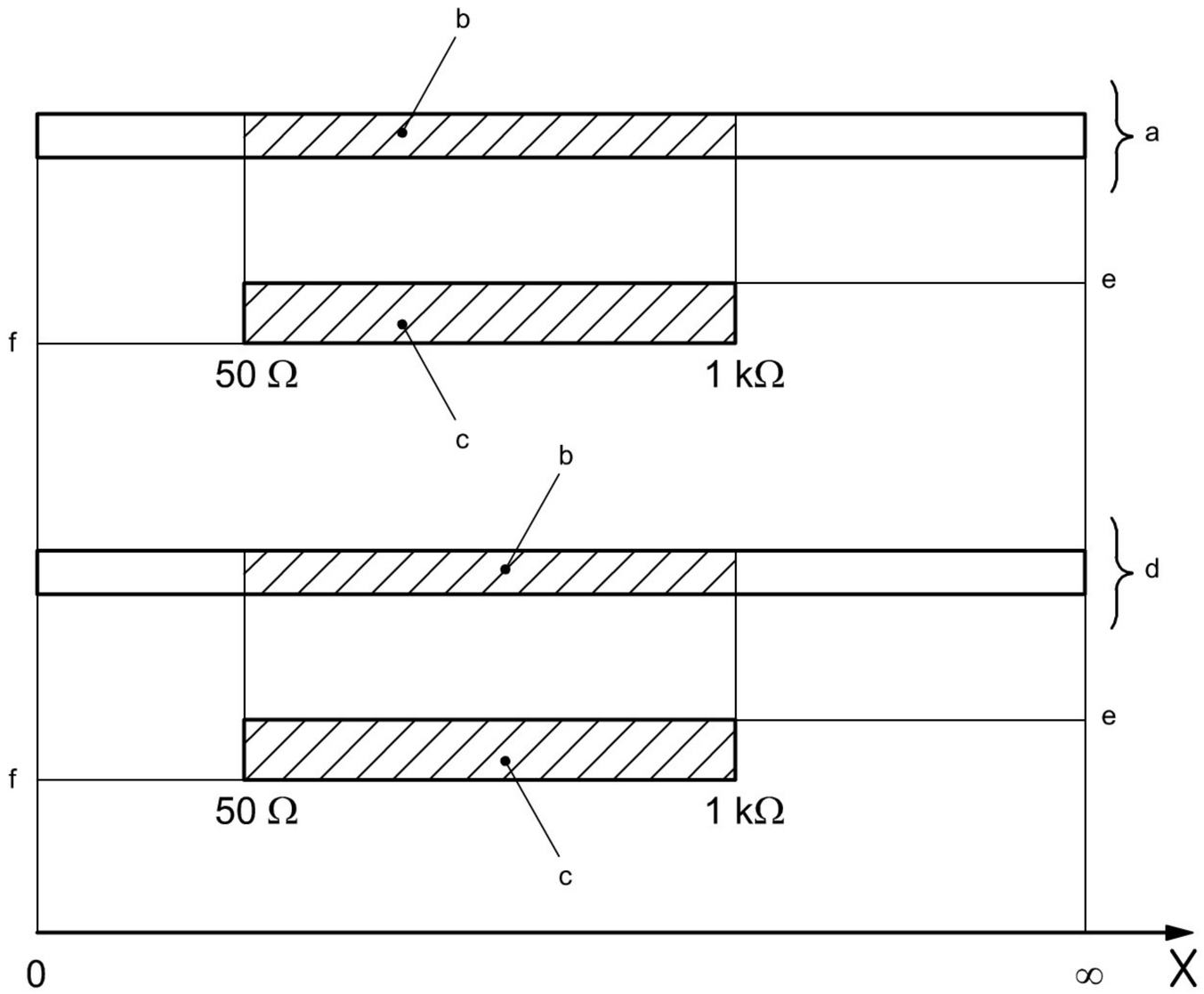

Key

X resistor range, in ohms (Ω), denotes interruption might occur at any given resistance

[a] CH_OW, i.e. the CAN_H line is interrupted).

[b] Fault free communication required.

[c] Failure state.

[d] CL_OW, i.e. the CAN_L line is interrupted.

[e] True, i.e. the failure is recognized and an appropriate reaction is performed.

[f] False, i.e. no failure is detected.

Figure 13 — Open wire operating mode

7.4.3 Short circuit failures

The single line short circuit failures are two dimensional failures. On the one hand, the voltage level at which a short circuit occurs can vary. On the other hand, a different resistance between bus wire and external voltage level is possible. Figure 14 shows the short circuit operating areas. Due to ground shift the operating areas (shaded areas) vary in a range of at least ± 1,5 V. The battery voltage level is a nominal voltage level it may vary in a wide range temporarily e.g. from 6,5 V to 27 V (12 V-systems) or from 21 V to 58 V (42 V-systems).

Copyright International Organization for Standardization
Provided by IHS under license with various National Standards Bodies
No reproduction or networking permitted without license from IHS

--`,,```,,,,,``,`,`,``,`,``,```,,,,,

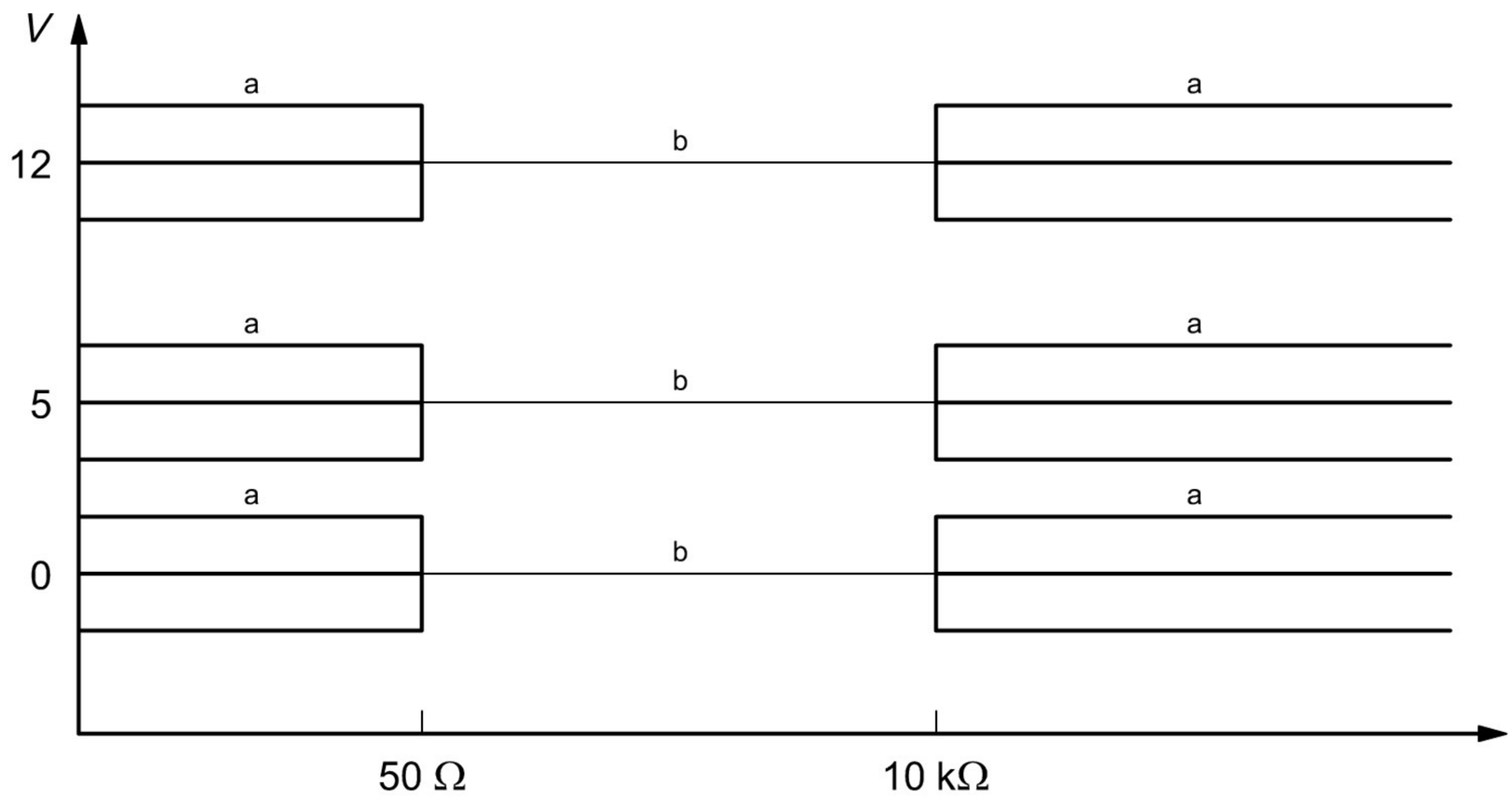

Key

a Proper network operation required.

b Proper network operation not required.

Figure 14 — Definition of short circuit operating modes

7.4.4 Power failures

Failures related to a proper power supply of the ECU such as loss of ground, loss of V_{CC} or V_{Bat} shall be treated in a common way. As long as the outer conditions enable a communication a node with a power failure should participate in network communication.

Whenever a network communication is not possible due to power failures, the transceiver device should behave in such a way to not disturb the rest of the network. Figure 15 illustrates the both power states and gives a vague indication when a transceiver should switch its mode.

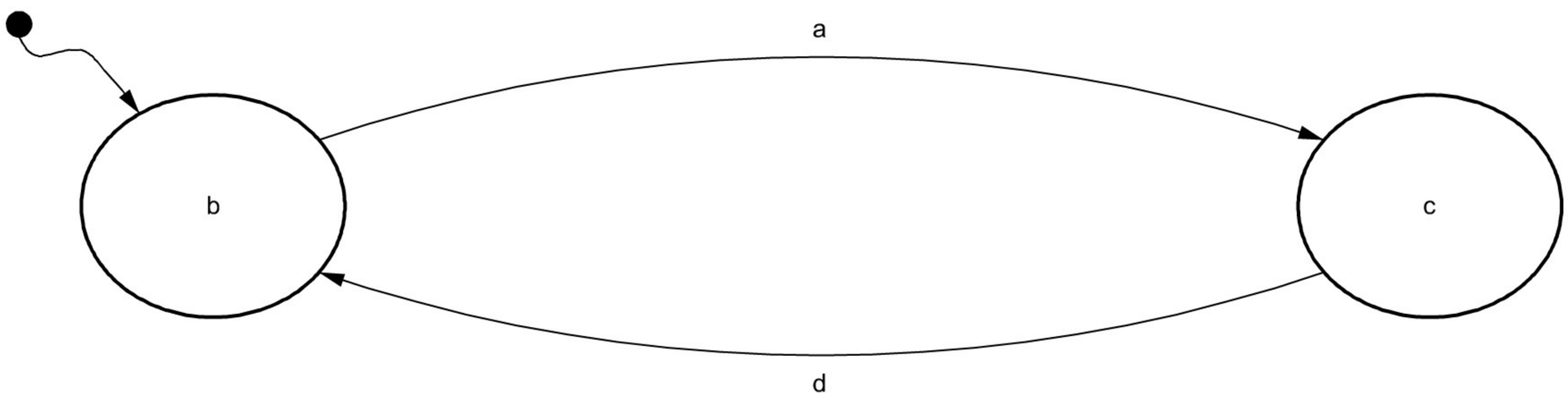

Key

a V_{Bat} or $V_{CC} \leqslant$ 4,6 V.

b Normal.

c No back current, no active bus influence.

d V_{Bat} or $V_{CC} \geqslant$ 4,6 V.

Figure 15 — Power operating modes

--`,,```,,,,`,`,`,,`,```,```,,-`-`,,`,,`,`,,`---

© ISO 2006 – All rights reserved

Copyright International Organization for Standardization
Provided by IHS under license with various National Standards Bodies
No reproduction or networking permitted without license from IHS
Licensee=Universita di Bologna/5930975001, User=bao, zhou
Not for Resale, 01/11/2017 18:44:19 MST

ICS 43.040.15

Price based on 25 pages

--`,,`,,,,,`,`,`,`,`,,`,`,`,`,`