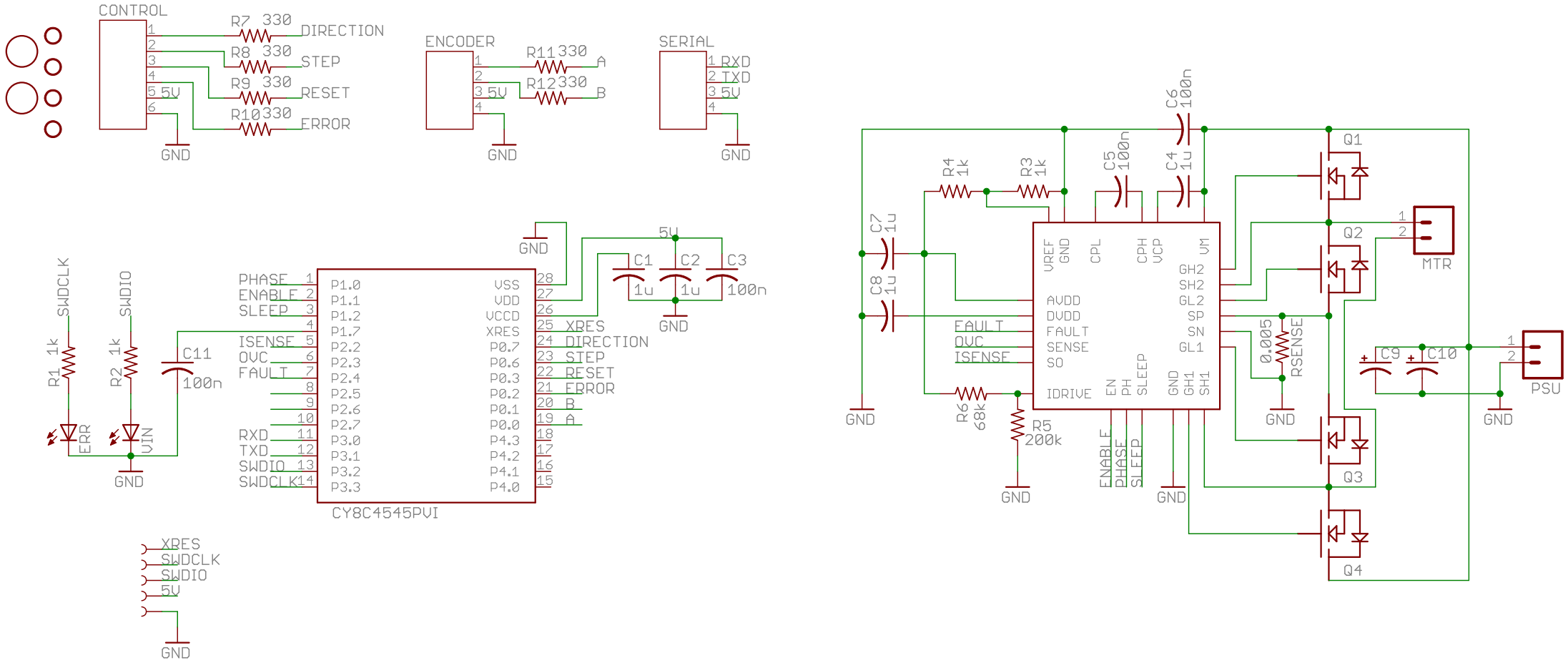
CONTROL
R7 330
R8 330
R9 330
R10 330
DIRECTION
STEP
RESET
ERROR
5V
GND
ENCODER
R11 330
R12 330
A
B
SERIAL
RXD
TXD
CY8C4545PVI
PHASE
ENABLE
SLEEP
ISENSE
OVC
FAULT
SWDCLK
SWDIO
XRES
VSS
VDD
VCCD
P0.7
P0.6
P0.3
P0.2
P0.1
P0.0
P4.3
P4.2
P4.1
P4.0
C1 1u
C2 1u
C3 100n
C11 100n
R1 1k
R2 1k
ERR
VIN
C6 100n
C5 100n
C4 1u
C7 1u
C8 1u
R4 1k
R3 1k
R6 68k
R5 200k
VREF
CPL
CPH
VCP
VM
GH2
SH2
GL2
SP
SN
GL1
AVDD
DVDD
SO
IDRIVE
EN
PH
GH1
SH1
Q1
Q2
Q3
Q4
MTR
PSU
0.005
RSENSE
C9
C10