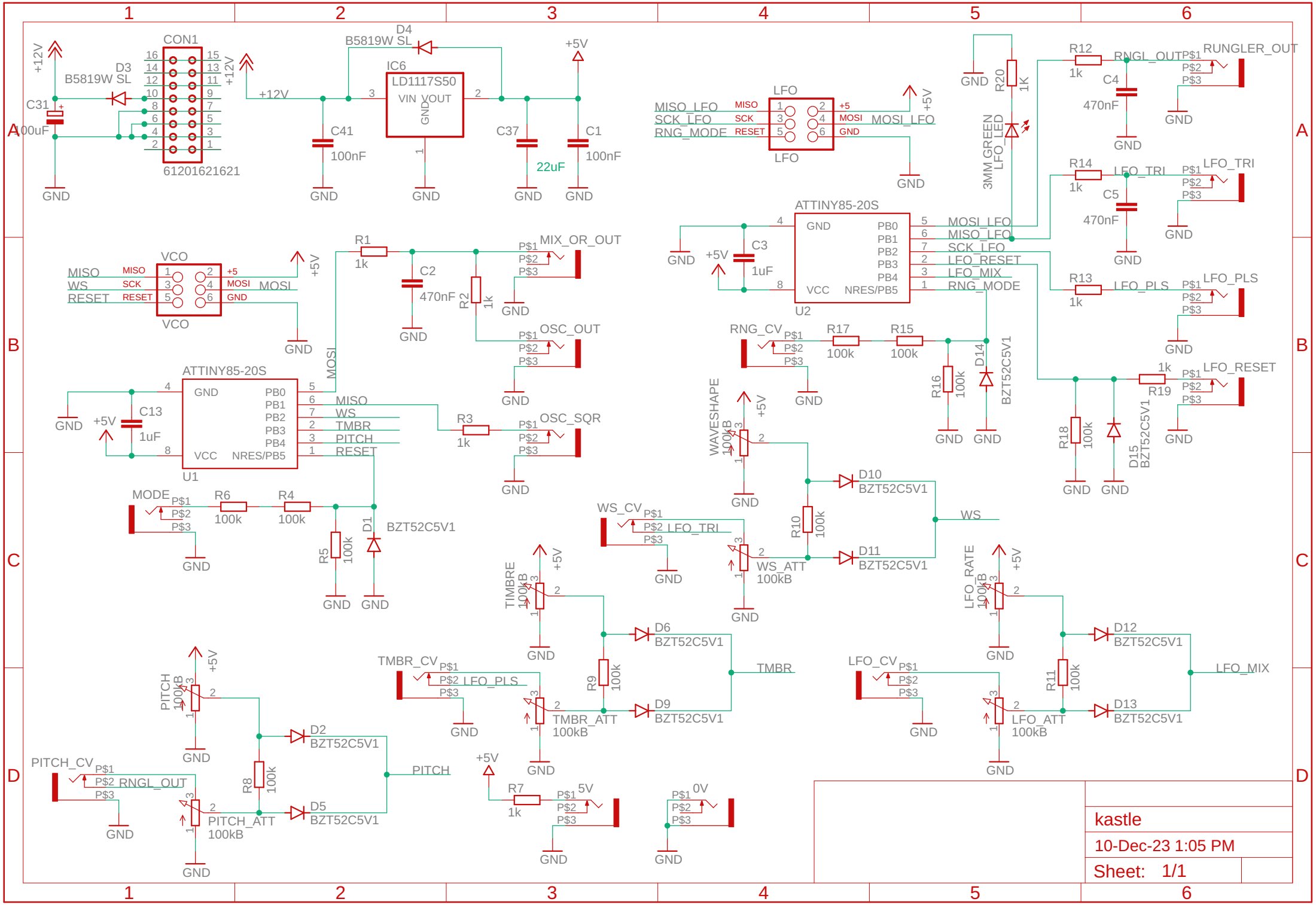

kastle

10-Dec-23 1:05 PM

Sheet: 1/1