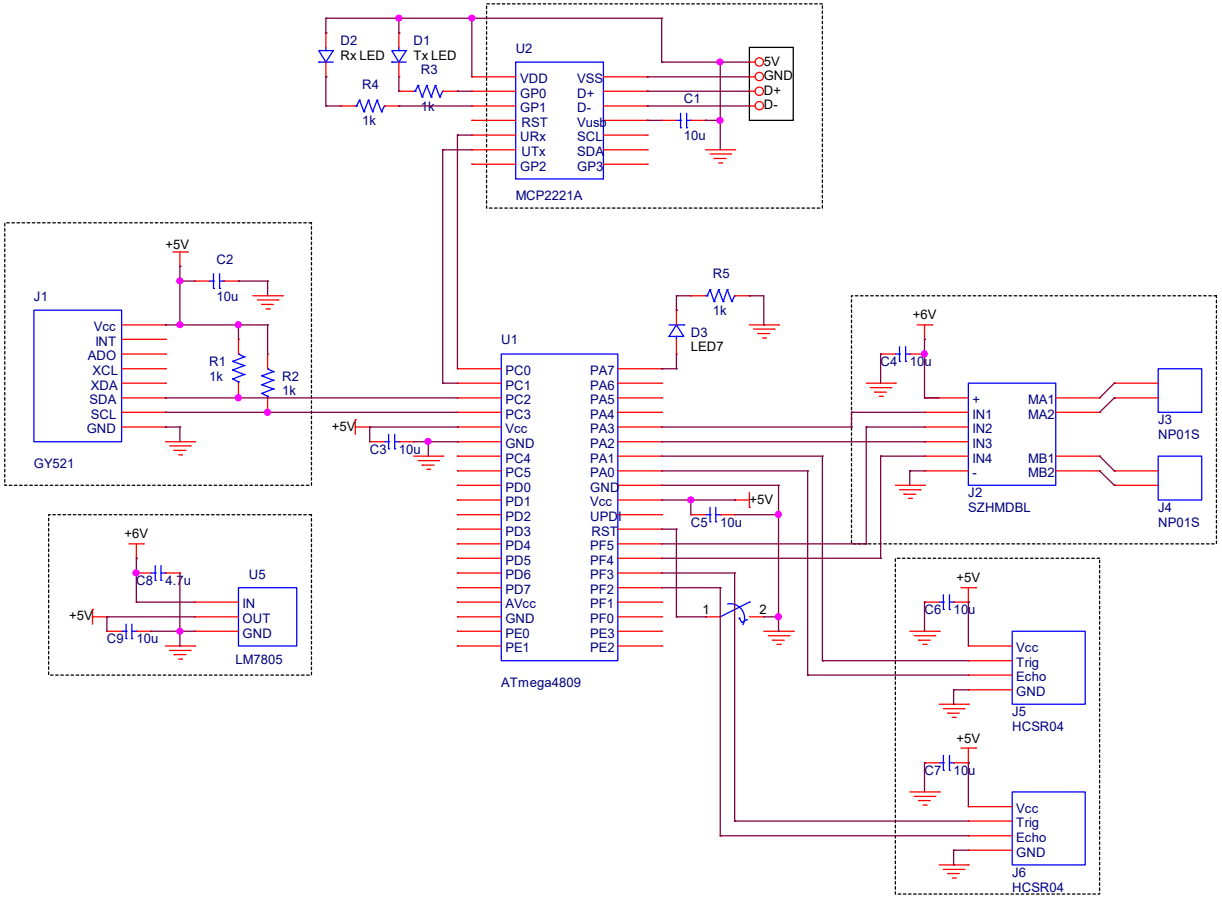

Title	Embedded System Capstone Design 001	
Size B	Document Number 1	Rev 1
Date: Wednesday, June 14, 2023	Sheet 1 of 1	