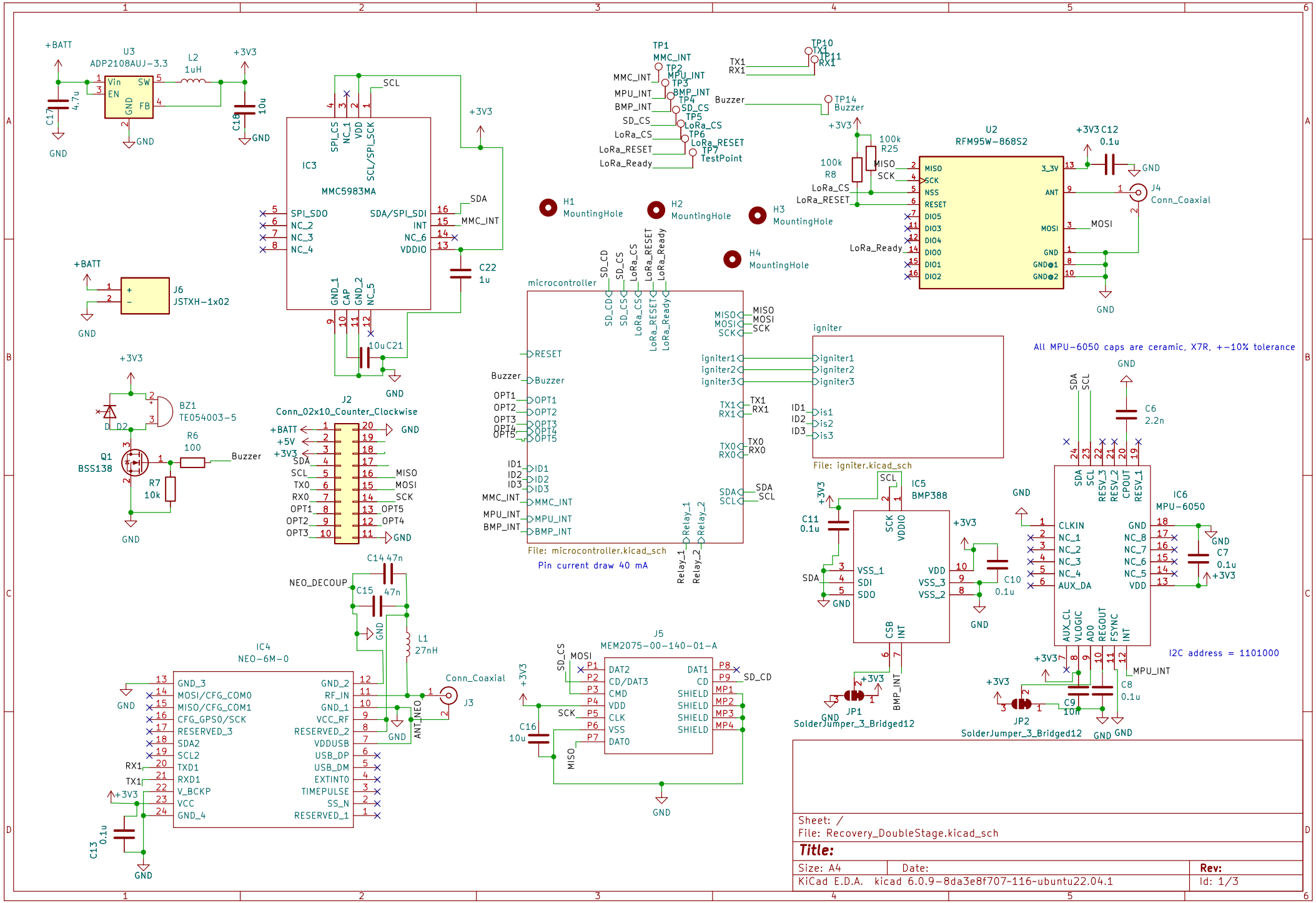
U3
ADP2108AUJ-3.3
L2
1uH
+BATT
+3V3
C17
4.7u
C18
10u
GND
IC3
MMC5983MA
SPI_CS
NC_1
VDD
SCL/SPI_SCK
SPI_SDO
NC_2
NC_3
NC_4
SDA/SPI_SDI
INT
NC_6
VDDIO
GND_1
CAP
GND_2
NC_5
C22
1u
C21
10u
J6
JSTXH-1x02
BZ1
TE054003-5
D2
R6
100
Buzzer
Q1
BSS138
R7
10k
J2
Conn_02x10_Counter_Clockwise
+5V
SDA
SCL
TX0
RX0
OPT1
OPT2
OPT3
OPT4
OPT5
MISO
MOSI
SCK
C14 47n
NEO_DECOUP
C15
47n
L1
27nH
IC4
NEO-6M-0
GND_3
MOSI/CFG_COM0
MISO/CFG_COM1
CFG_GPS0/SCK
RESERVED_3
SDA2
SCL2
TXD1
RXD1
V_BCKP
VCC
GND_4
GND_2
RF_IN
GND_1
VCC_RF
RESERVED_2
VDDUSB
USB_DP
USB_DM
EXTINT0
TIMEPULSE
SS_N
RESERVED_1
ANT_NEO
Conn_Coaxial
J3
RX1
TX1
C13
0.1u
TP1
MMC_INT
TP2
MPU_INT
TP3
BMP_INT
TP4
SD_CS
TP5
LoRa_CS
TP6
LoRa_RESET
TP7
TestPoint
LoRa_Ready
TP10
TP11
TP14
Buzzer
100k
R25
R8
U2
RFM95W-868S2
3_3V
ANT
NSS
RESET
DIO5
DIO3
DIO4
DIO0
DIO1
DIO2
GND@1
GND@2
C12
0.1u
J4
Conn_Coaxial
H1
MountingHole
H2
MountingHole
H3
MountingHole
H4
MountingHole
microcontroller
File: microcontroller.kicad_sch
Pin current draw 40 mA
Relay_1
Relay_2
igniter
File: igniter.kicad_sch
All MPU-6050 caps are ceramic, X7R, +-10% tolerance
C6
2.2n
IC5
BMP388
VSS_1
SDI
SDO
VDD
VSS_3
VSS_2
VDDIO
CSB
INT
C11
0.1u
C10
0.1u
JP1
SolderJumper_3_Bridged12
IC6
MPU-6050
CLKIN
NC_1
NC_2
NC_3
NC_4
AUX_DA
AUX_CL
VLOGIC
AD0
REGOUT
FSYNC
RESV_3
RESV_2
CPOUT
RESV_1
C7
0.1u
C8
0.1u
C9
10n
JP2
SolderJumper_3_Bridged12
I2C address = 1101000
MPU_INT
J5
MEM2075-00-140-01-A
DAT2
CD/DAT3
CMD
VDD
CLK
VSS
DAT0
DAT1
CD
SHIELD
MP1
MP2
MP3
MP4
C16
10u
Sheet: /
File: Recovery_DoubleStage.kicad_sch
Title:
Size: A4
Date:
Rev:
KiCad E.D.A. kicad 6.0.9-8da3e8f707~116~ubuntu22.04.1
Id: 1/3

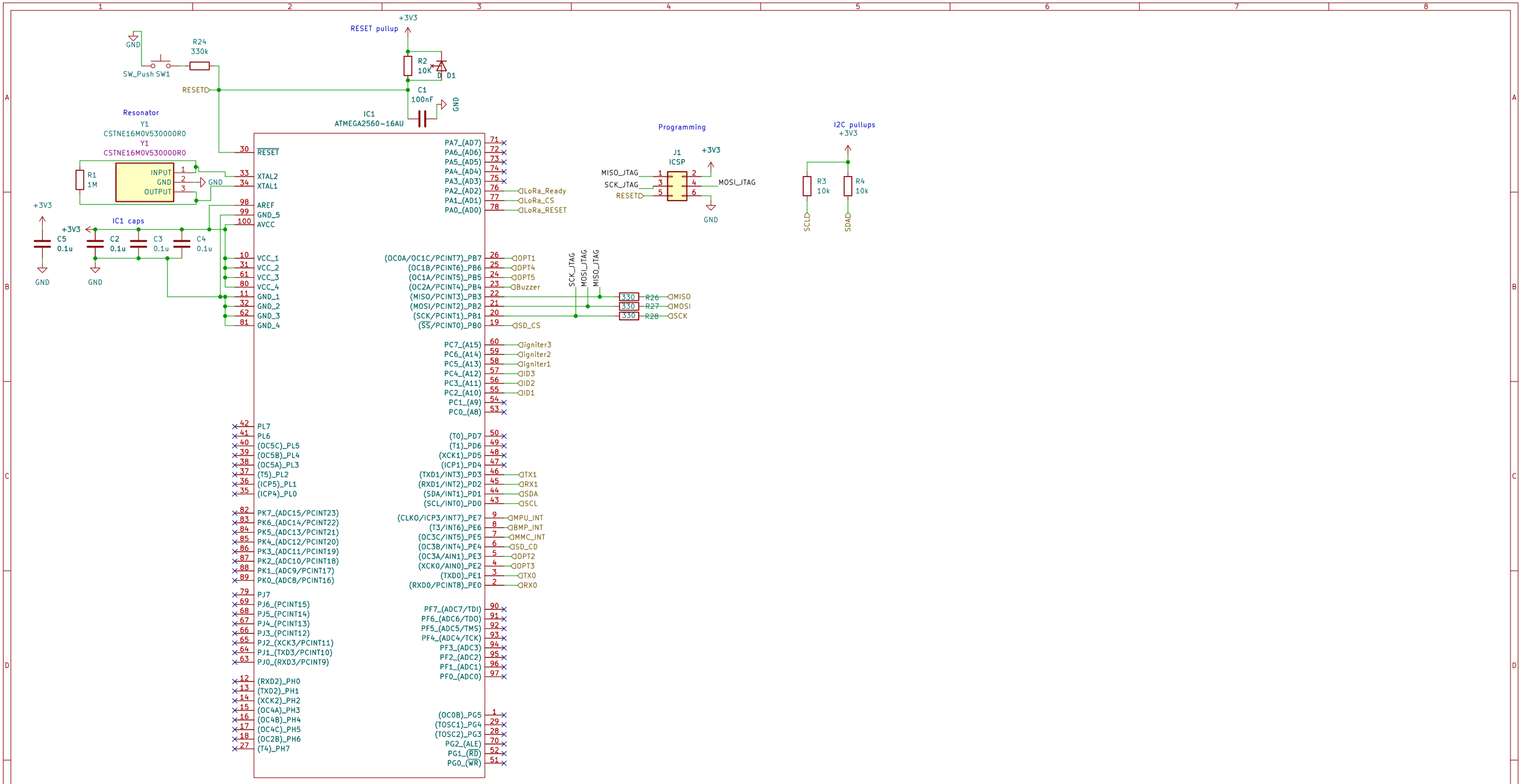

Sheet: /microcontroller/
File: microcontroller.kicad_sch

Title:

Size: A3	Date:	Rev:
KiCad E.D.A. kicad 6.0.9-8da3e8f707~116~ubuntu22.04.1		Id: 2/3

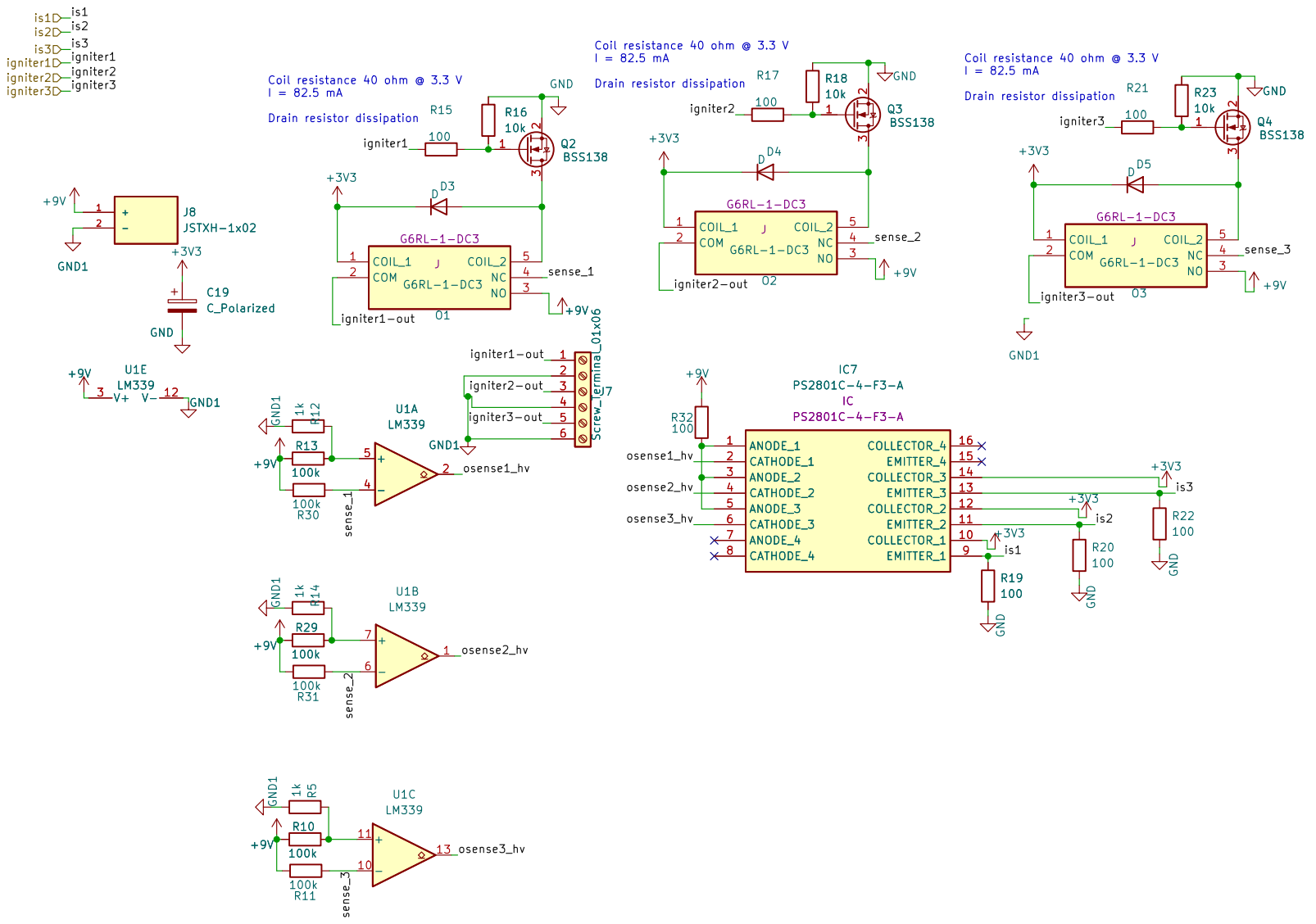

Sheet: /igniter/
File: igniter.kicad_sch

Title:

Size: A4	Date:	Rev:
KiCad E.D.A. kicad 6.0.9-8da3e8f707~116~ubuntu22.04.1		Id: 3/3