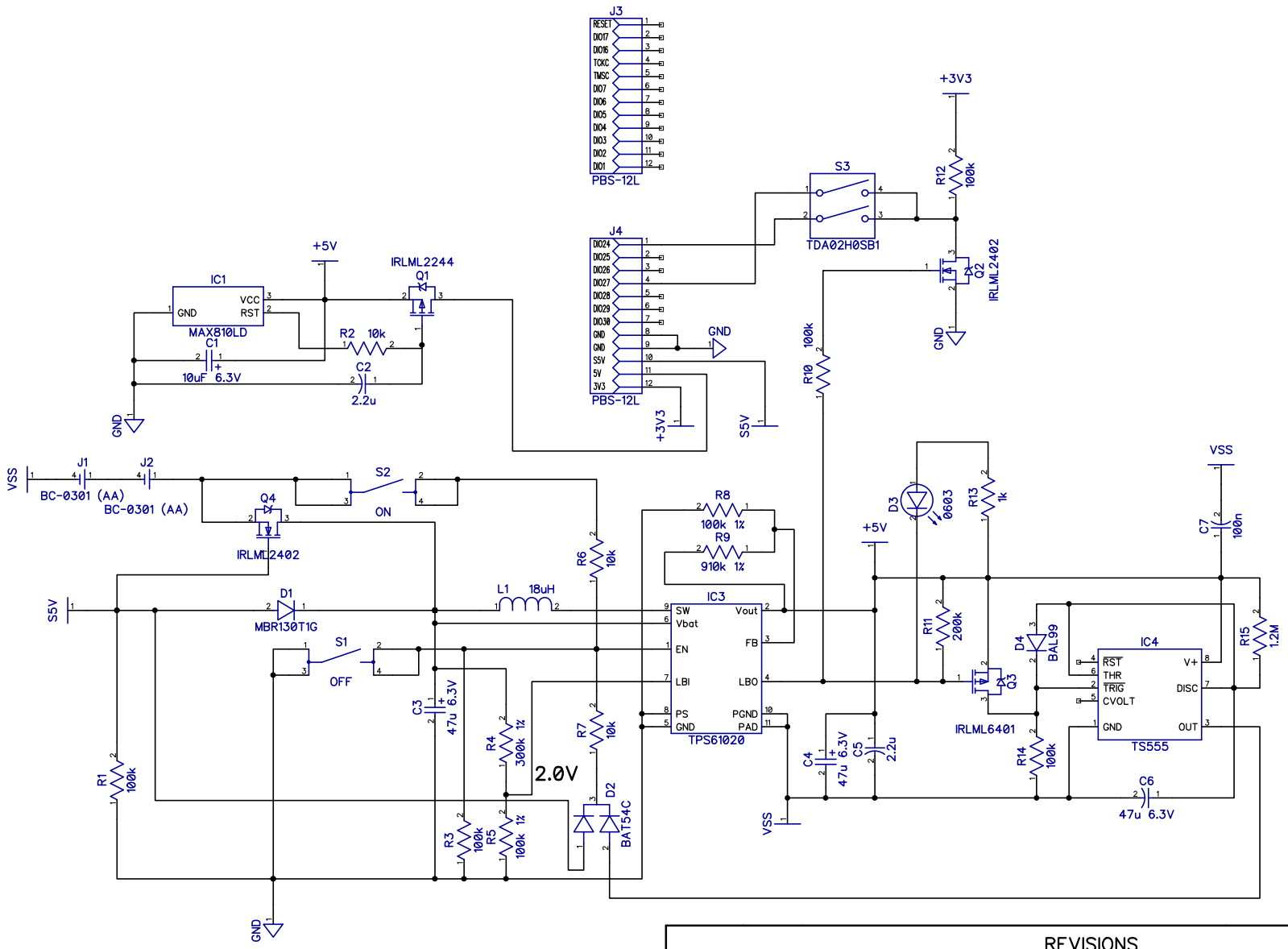

REVISIONS				
ZONE	REV	DESCRIPTION	DATE	APPROVED

umdk-2aa

2xAA battery power supply with step-up DC/DC and discharge control