7

The continuous absorption coefficient

7.1 The different absorption processes for hydrogen

Basically there are three different absorption mechanisms, two of which contribute to the continuous absorption, and one which gives rise to the line absorption. In order to understand this, let us look at the energy level diagram of the hydrogen atom, which we have plotted schematically in Fig. 7.1. The ionization energy for the hydrogen atom is 13.6 eV. This means that if an electron in the lowest energy level – the ground state – of the hydrogen atom in some way gains the energy of 13.6 eV, it has enough energy to overcome the attractive forces of the proton. It can then leave the atom and is a free electron. We have indicated the energy level which permits the electron to leave by the top level in Fig. 7.1. For the hydrogen atom the positions of the other energy levels can be calculated easily.

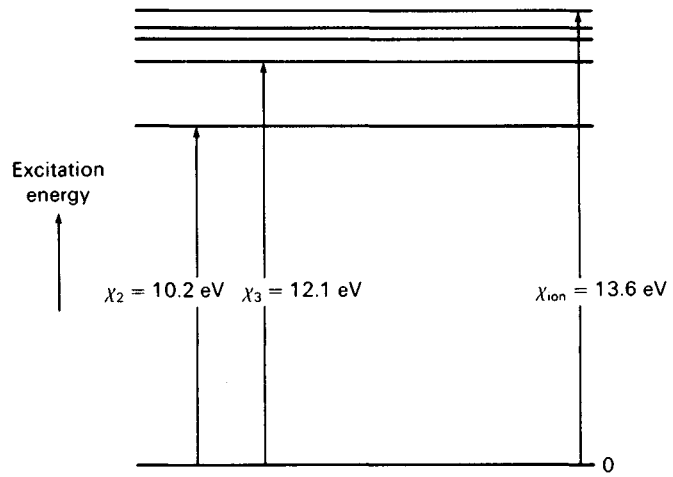

Fig. 7.1. Schematic energy level diagram for the hydrogen atom. Transitions between two discrete bound levels lead to line absorption or emission.

The difference between the first excited level ($n = 2$) and the ionization limit is, according to the Bohr model, 13.6/4 eV. The difference to the next higher one ($n = 3$) is $13.6/9 \approx 1.5$ eV. This yields for the excitation energy, i.e., the energy difference to the ground level,

$$\chi_n = \chi_{\text{ion}}\left(1 - \frac{1}{n^2}\right). \tag{7.1}$$

For the hydrogen atom, all orbitals of a given main quantum number n but with different quantum numbers for angular momentum have the same energy. This means we can realize the same energy by several different sets of quantum numbers. The number of the different possibilities that will lead to the same energy level is called the *statistical weight* for that particular energy level. For a given n this turns out to be $2n^2$. The statistical weight for each level n in the hydrogen atom is therefore $2n^2$. We can realize a state with principal quantum number n in $2n^2$ different ways. Since the Pauli principle does not permit two electrons with equal quantum numbers in one quantum cell, i.e., for one n, we find that we can have $2n^2$ electrons at each level n. This, of course, also applies to atoms with larger nuclear charges Z. This explains the shell structure of the atoms, which leads to noble gas configurations if there are $2n^2$ electrons in the outer shell. For atoms or ions with more than one electron, electron states with the same n but with different other quantum numbers usually have different energy values.

A transition of an electron from one bound energy level to another leads to the emission or absorption of a photon, depending on whether the final energy level has a lower or higher energy than the starting level. The frequency of the emitted or absorbed photon is given by

$$h\nu = \chi_m - \chi_l, \tag{7.2}$$

if χ_m is the energy of the higher energy level and χ_l is that of the lower energy level involved in the transition. Since this gives a definite value for the frequency or the wavelength $\lambda = c/\nu$, a transition between two bound states can only lead to the emission or absorption of light of one particular wavelength, i.e., to line emission or absorption. We will talk about this later. We are presently concerned with the absorption between lines, i.e., an absorption mechanism that involves a continuum of frequencies. This is only possible if at least at one end of the transition there is a continuum of energy levels. We know that a free electron can have a continuous set of velocity values. If the transition begins or ends at a free state of the electron (i.e., an energy above the ionization limit) we can have a continuum of transition energies, which means a continuum of absorbed and emitted

frequencies or wavelengths (see Fig. 7.2). We have basically two possibilities for continuous absorption. One possibility is a transition from a bound state at level n, to a free state with a velocity v. These transitions are called *bound-free transitions*. The frequency of the absorbed photon is given by

$$h\nu = (\chi_{\text{ion}} - \chi_n) + \tfrac{1}{2}mv^2. \qquad 7.3$$

We can also get a continuum of transitions if the electron goes from one free state with velocity v_1 to another free state with velocity v_2. The absorbed frequency for these *free-free transitions* is given by

$$h\nu = \tfrac{1}{2}mv_2^2 - \tfrac{1}{2}mv_1^2. \qquad 7.4$$

There are an infinite number of free-free transitions that will absorb the same frequency for different starting energies $\frac{1}{2}mv_1^2$. This holds for every frequency. For the calculation of the free-free absorption coefficient of a given atom or ion an infinite number of transition probabilities has to be computed at each frequency. For each discrete energy level n there is only one bound-free transition which leads to an absorption of frequency ν in the continuum. However, for each frequency the transition probability has to be computed for each level n.

Each bound-free transition corresponds to an ionization process, since the electron is free afterwards. The *emission* of a photon by a free-bound transition corresponds to a recombination process.

For the hydrogen atom, the continuous absorption coefficient for one hydrogen atom at level n was computed to be

$$a_n = \frac{1}{n^2}\frac{64\pi^4}{3\sqrt{3}}\frac{1}{\nu^3}\frac{Z^4me^{10}}{ch^6n^3}G, \qquad 7.5$$

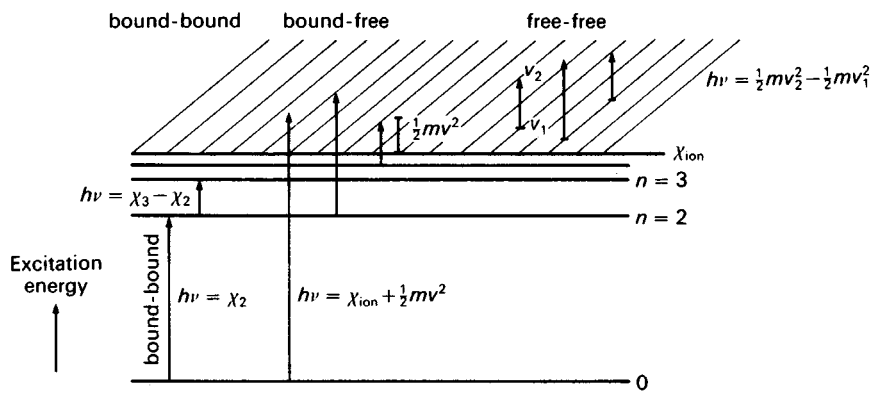

Fig. 7.2. A continuum of absorption processes can occur, if the electron transfers from a bound state into a free state, or if it goes from one free state into another one. We call these transitions bound-free or free-free transitions.

where G is a correction factor, the so-called Gaunt factor, which does not deviate from 1 by more than a few percent. Here m and e are electronic mass and charge. Ze is the effective nuclear charge attracting the absorbing electron.

In order to compute the total absorption at frequency ν, we have to multiply a_n by the number of atoms in the considered state with quantum number n and then sum up over all states n that contribute at the given frequency ν. Finally, we have to add the free-free contributions.

Which states n contribute at a given frequency? From Fig. 7.2 it is obvious that the minimum photon frequency necessary for a transition of an electron into the continuum – or for an ionization process – from level n is given by $\chi_{\text{ion}} - \chi_n$. For the hydrogen atom $\chi_n = \chi_{\text{ion}}(1 - (1/n^2))$. For continuous absorption from level n we therefore need a photon with an energy large enough to overcome this energy difference, i.e.,

$$h\nu > \chi_{\text{ion}} - \chi_n \qquad \text{or} \qquad \lambda < \frac{hc}{(\chi_{\text{ion}} - \chi_n)}. \tag{7.6}$$

For very long wavelengths only energy levels with very large χ_n can contribute to the continuous absorption. For very large λ mainly free-free transitions will contribute. The contribution of level n will start at the frequency $\nu_n = (\chi_{\text{ion}} - \chi_n)/h$ or $\lambda_n = hc/(\chi_{\text{ion}} - \chi_n)$ and will continue for shorter λ. At these frequencies the κ_λ increases discontinuously because the number of absorbing atoms suddenly increases. The wavelength dependence of the continuous κ for the hydrogen atom is shown in Fig. 7.3. In Fig. 7.4 we show the qualitative run of the He^+ continuous absorption coefficient. For this ion the ionization energy is larger by a factor of $Z^2 = 4$ than that of the hydrogen atom. All excitation energies are larger by the same factor, and all discontinuities occur at wavelengths shorter by that same factor of 4. In both plots the quantum mechanical correction factors – the so-called Gaunt factors – were omitted. They change the κ by a few percent only. In accurate calculations they have to be included.

We see in Fig. 7.3 that in the visual spectral region it is mainly the Paschen continuum, i.e., absorption from the level $n = 3$, which determines the hydrogen absorption coefficient. In the ultraviolet it is the Balmer continuum, i.e., absorption from the level $n = 2$. The discontinuity at $\lambda = 3647$ Å is determined by the ratio of the hydrogen atoms in the second and third quantum levels.

Another interesting fact is seen in Figs. 7.3 and 7.4; namely, the absorption coefficient per atom at the Lyman limit always has approximately the value of the cross-section of the lowest orbital in the

atom, which for the hydrogen atom is 0.5×10^{-8} cm. The cross-section σ is therefore $\sigma \sim 0.785 \times 10^{-16}$ or $\log \sigma = 0.895 - 17$, which is nearly equal to $\log \kappa_\lambda$ at the Lyman limit as seen in Fig. 7.3. For the He^+ ion the radius of the orbital is smaller by the factor Z. The cross-section is then smaller by a factor of 4, as is the case for κ_λ at the Lyman limit for the He^+ ion.

7.2 The Boltzmann formula

In order to calculate the absorption coefficient for the hydrogen atom $\kappa(H)$, we must know the number of hydrogen atoms in the different quantum states. We call these the *occupation numbers* of the different energy levels with excitation energies χ_n above the ground level.

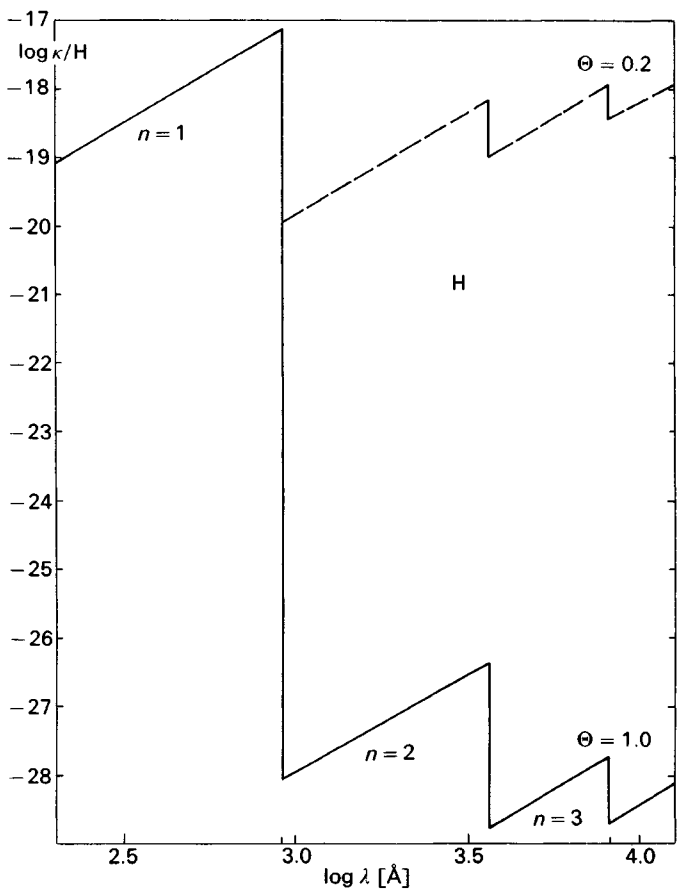

Fig. 7.3. The hydrogen absorption coefficient κ_λ per hydrogen atom is shown as a function of wavelength for two temperatures $\Theta = 5040/T = 0.2$ and for $\Theta = 5040/T = 1.0$. Higher temperatures lead to higher values of κ_λ in the visual spectral region.

Boltzmann showed that the probability of finding an atom or electron in an excited state with energy χ_n decreases exponentially with increasing χ_n but increases with increasing temperature T, i.e.,

$$\frac{N_n}{N_1} = \frac{g_n}{g_1} e^{-\chi_n/kT}, \qquad 7.7$$

where χ_n is the energy difference between the level n and the ground level, g_n and g_1 are the statistical weights for level n and the ground state, respectively. Equation (7.7) is called the *Boltzmann formula*; k is the Boltzmann constant, $k = 1.38 \times 10^{-16}$ erg degree^{-1}.

The Boltzmann formula in equation (7.7) is only a special form of the general case that the number of particles with an energy E is always proportional to $e^{-E/kT}$ (see, for instance, the Maxwell distribution for the kinetic energies of particles).

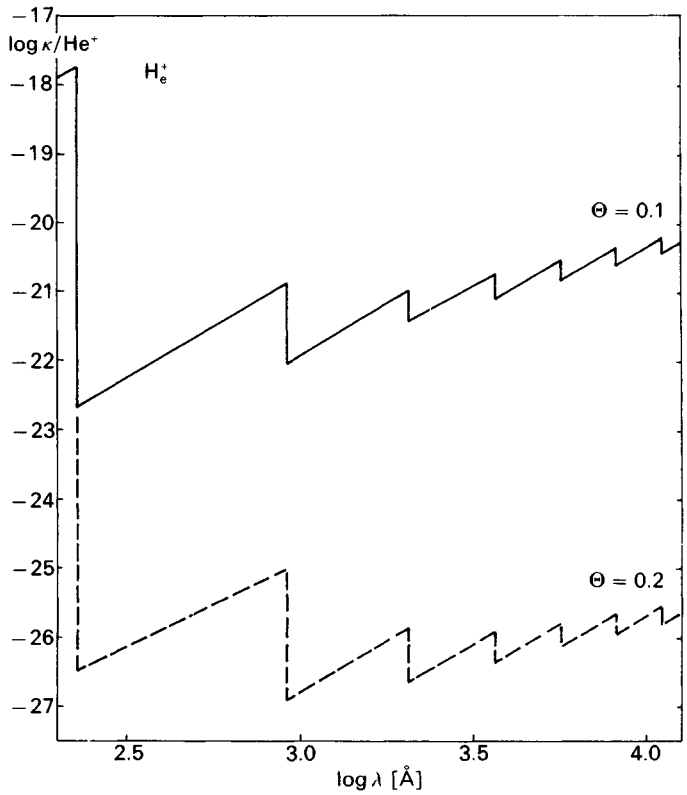

Fig. 7.4. The helium ion He^+ absorption coefficient per He^+ ion is shown as a function of wavelength λ for the two temperatures $\Theta = 5040/T = 0.1$ and $\Theta = 5040/T = 0.2$. The He^+ absorption coefficient is extremely small for temperatures below 25 000 K.

In the exponent in equation (7.7) we find k, which is normally given in erg per degree, while the excitation energy is usually given in electron-volts. We would therefore like to rewrite the exponent in the form that we can use these quantities in the customary units. With $1\,\text{eV} = 1.602 \times 10^{-12}$ erg we can rewrite the exponent in the following form:

$$\chi_n/kT = \frac{\chi_n(\text{eV}) \times 1.602 \times 10^{-12}}{1.38 \times 10^{-16} \times T} = \frac{\chi_n(\text{eV}) \times 1.160 \times 10^4}{T},$$

and

$$\log \mathrm{e}^{-\chi_n/kT} = -(\chi_n/kT) \log \mathrm{e}$$

$$= \frac{-\chi_n(\text{eV})}{T} \times 1.160 \times 10^4 \times 0.4343 = -\chi_n(\text{eV}) \frac{5040}{T}. \qquad 7.8$$

The ratio $5040/T$ occurs in many places. It is usually abbreviated by the symbol Θ.

In order to compute N_n according to equation (7.7), we have to know N_1, which requires a knowledge of the abundances of the element under consideration. We also have to know whether the element is partially or almost completely ionized. We saw above that an electron bound in the atom may absorb a photon. If the photon is energetic enough the electron can get enough energy to leave the atom as a free electron and the former atom remains as an ion, i.e., as a particle with a positive charge. Such ionization decreases the number of atoms in the ground level. We therefore have to know how many atoms have been converted into ions.

7.3 The Saha equation

The degree of ionization of any atom or ion can be obtained from the Saha equation, which can be derived from the above Boltzmann formula if we extend the states with quantum numbers n to positive energies, i.e., to free electrons with the appropriate statistical weights (see Unsöld, 1955). One finds

$$\frac{N_1^+ n_e}{N_1} = \frac{g_1^+}{g_1} 2 \frac{(2\pi mk)^{3/2}}{h^3} T^{3/2} \mathrm{e}^{-\chi_{\text{ion}}/kT}. \qquad 7.9$$

Here m is the mass of the electron, N_1^+ is the number of ions in their ground state, and N_1 is the number of atoms in the ground state. g_1^+ is the statistical weight of the ground state of the ion.

Similarly, we can write down the Saha equation for the next higher state of ionization, if an additional electron is removed from the ion and an ion with two positive charges is formed. In this case we have to write

$$\frac{N_1^{++} n_e}{N_1^+} = \frac{g_1^{++}}{g_1^+} \frac{2(2\pi mk)^{3/2}}{h^3} T^{3/2} \mathrm{e}^{-\chi_{\text{ion}}^+/kT}, \qquad 7.10$$

where g_1^{++} is the statistical weight of the ground state of the twice ionized ion and N_1^{++} is the number of twice ionized ions in the ground state. χ_{ion}^{+} is the amount of energy necessary to remove the additional electron from the ion with one positive charge. It does not include the energy necessary to remove the first electron.

If we want the ratio of the total number of ions N^+ to the total number of atoms N, then we have to calculate N/N_1 and N^+/N_1^+. We can do this by using equation (7.7). Clearly, N is the sum of all the particles in the different quantum states, N_n, and similarly, N^+ is the sum over all the ions in their different quantum states, N_n^+. With

$$N_n^+ = N_1^+ \frac{g_n^+}{g_1^+} \mathrm{e}^{-\chi_n^+/kT},$$

and

$$N^+ = N_1^+ + \sum_{n=2}^{\infty} N_n^+ = N_1^+ + \frac{N_1^+}{g_1^+} \sum_{n=2}^{\infty} g_n^+ \mathrm{e}^{-\chi_n^+/kT}, \qquad 7.11$$

we find

$$N^+ = \frac{N_1^+}{g_1^+}\left(g_1^+ + \sum_{n=2}^{\infty} g_n^+ \mathrm{e}^{-\chi_n^+/kT}\right) = \frac{N_1^+}{g_1^+} u^+, \qquad \text{or} \qquad \frac{N^+}{N_1^+} = \frac{u^+}{g_1^+}, \qquad 7.12$$

where

$$u^+ = g_1^+ + \sum_{n=2}^{\infty} g_n^+ \mathrm{e}^{-\chi_n^+/kT} \qquad 7.13$$

is called the *partition function* of the ion.

For the atom on the next lower state of ionization, we find similarly for its partition function u

$$u = g_1 + \sum_{n=2}^{\infty} g_n \mathrm{e}^{-\chi_n/kT}. \qquad 7.14$$

Multiplication of (7.9) by $\dfrac{N^+}{N_1^+} \times \dfrac{N_1}{N}$ yields

$$\frac{N^+ n_e}{N} = \frac{u^+}{u} \frac{2(2\pi m)^{3/2}}{h^3} (kT)^{3/2} \mathrm{e}^{-\chi_{\text{ion}}/kT}. \qquad 7.15$$

This is the well-known *Saha equation*. It is the equivalent of the mass reaction equation used in chemistry to compute the concentrations of different reacting particles.

For the next higher degree of ionization, we obtain

$$\frac{N^{++} n_e}{N^+} = \frac{u^{++}}{u^+} \frac{2(2\pi m)^{3/2}(kT)^{3/2}}{h^3} \mathrm{e}^{-\chi_{\text{ion}}^{+}/kT}, \qquad 7.16$$

with χ_{ion}^{+} the ionization energy of N^+ to make N^{++}. Collecting all the

atomic constants and writing equation (7.16) in logarithmic form, we obtain

$$\log \frac{N^+}{N} = \log \frac{u^+}{u} + \log 2 + \tfrac{5}{2} \log T - \chi_{\text{ion}} \Theta - \log P_e - 0.48. \qquad 7.17$$

Here we have introduced $P_e = n_e kT$, the electron pressure, instead of the electron density n_e. We therefore had to add $\log k + \log T$.

In this logarithmic form the Saha equation contains only one constant which can easily be remembered.

We are now able to calculate the degree of ionization for the hydrogen atom, for instance, in the solar photosphere, where we have a temperature of $T \approx 6000$ K and where the electron pressure is $\log P_e = 1.5$, as we shall see later. For this temperature we obtain $\Theta = 0.84$, $\log T = 3.78$ and $2.5 \log T = 9.45$. Since the proton has no electrons left to be in excited states, it can only exist in one form. Its statistical weight for the ground state is 1 and the partition function is also 1. The neutral hydrogen atom can exist in two forms in the ground level; with spin-up or with spin-down for the electron. The statistical weight of the ground level is therefore 2. The excitation energies for the levels with $n > 1$ are so high that the numbers of particles in those states are negligible in comparison with the number in the ground state. We can therefore say that the partition function $u(\text{H}) = 2$. We then obtain the Saha equation for the ionization of hydrogen in the solar photosphere

$$\log \frac{\text{H}^+}{\text{H}} = \log \tfrac{2}{2} + 9.45 - 0.48 - 11.42 - 1.5 = -4,$$

or $\log(N(\text{H}^+)/N(\text{H})) = -4$, which tells us that $\text{H}^+/\text{H} = 10^{-4}$, i.e., only one out of 10^4 hydrogen atoms is ionized.

Let us now do the same computation for the negative hydrogen ion H^-. The binding energy for the electron in this ion is only $\chi_{\text{ion}}(\text{H}^-) = 0.7$ eV. The H^- ion has no excited states with energies below the ionization energy. We only have to consider the statistical weight for the ground level if we want to calculate the partition function. The H^- ion has two electrons; they are both in the level with $n = 1$. Since, according to the Pauli principle, these two electrons cannot have all quantum numbers equal, one electron must have spin-up and the other must have spin-down. There is no other way for them to exist. This means that the statistical weight for the H^- ion in the ground state must be 1. We also have to realize now that it is the H^- ion which loses the electron to become a neutral atom. Therefore, the hydrogen atom now is in the role of the ion, while the H^- is in the place of the neutral atom. The Saha equation therefore has to be written as

$$\log \frac{N(\text{H})}{N(\text{H}^-)} = \log \tfrac{4}{1} + 9.45 - 0.48 - 0.59 - 1.5 = +7.5,$$

or

$$\frac{N(H^-)}{N(H)} \approx 3 \times 10^{-8}.$$

Only one out of 10^7 hydrogen atoms is in the form of H^-.

7.4 The H^- absorption coefficient in the sun

If there are so few H^- ions in the solar photosphere, why then is the H^- absorption coefficient so important?

We saw earlier that in the visual spectral region only the hydrogen atoms in the third quantum level can contribute to the continuum absorption, i.e. in the Paschen continuum. For the H^- ion with an ionization energy of only 0.7 eV, the limiting wavelengths for continuum bound-free absorption is at about 17 000 Å. This means all the H^- ions can contribute to the absorption in the visual region. In order to estimate the importance of the H^- absorption we therefore have to compare the number of H^- ions with the number of hydrogen atoms in the third quantum level. From the Boltzmann formula we find that

$$\log \frac{N_H(n=3)}{N_H(n=1)} = 0.95 - 12.1\Theta = 0.95 - 12.1 \times 0.84 = 0.95 - 10.16 = -9.21.$$

or

$$\frac{N_H(n=3)}{N_H(n=1)} = 6 \times 10^{-10}.$$

Since

$$\frac{N(H^-)}{N_H(n=3)} = \frac{N(H^-)}{N_H(n=1)} \frac{N_H(n=1)}{N_H(n=3)},$$

we find

$$\frac{N_H(n=3)}{N(H^-)} = \frac{6 \times 10^{-10}}{3 \times 10^{-8}} = 2 \times 10^{-2}.$$

As the atomic absorption coefficients per absorbing atom are generally of the same order of magnitude, we expect the H^- absorption to be roughly 100 times more important than the Paschen continuum.

On the other hand, if we compute the number of atoms in the second quantum level, we find

$$\log \frac{N(n=2)}{N(n=1)} = 0.6 - 10.2\Theta = -7.97 \sim -8,$$

and

$$\frac{N(n=2)}{N(H^-)} = \frac{10^{-8}}{10^{-7}} \sim 10^{-1}.$$

There are 10 times as many H^- ions as hydrogen atoms in the second quantum level, but the number of hydrogen atoms in the second quantum level is not completely negligible. At the Balmer limit, i.e., at λ3647 Å, the continuous κ in the sun is expected to increase by about 10%. There is a small discontinuity observed in the continuous κ, as seen in Fig. 7.5.

What is the wavelength dependence of the H^- absorption coefficient? We have one bound-free continuum from the ground level of H^-. There are no excited levels in H^-. The bound-free continuous absorption can take place for all λ shorter than that corresponding to $h\nu = \chi_{\text{ion}} = 0.7$ eV. This corresponds to a wavelength of 17 000 Å. For longer wavelengths, we can only have free-free absorption, which goes roughly $\sim \nu^{-3}$.

The bound-free $\kappa(H^-)$ shows a different behavior from $\kappa(H)$. It first increases when going to shorter wavelengths, has a maximum around 8000 Å, and then decreases towards the violet. The sum of the free-free and the bound-free absorption shows a minimum around 16 000 to

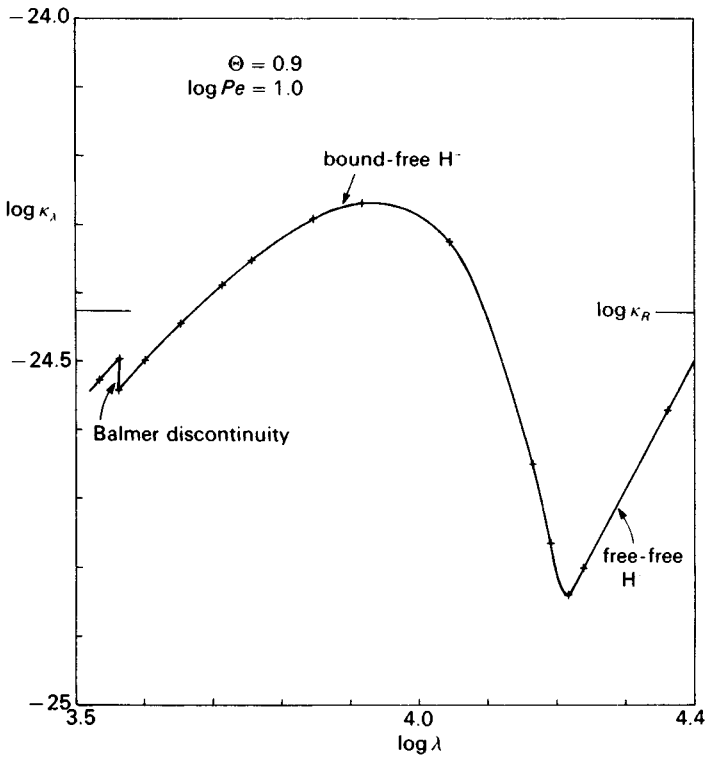

Fig. 7.5. The continuous absorption coefficient per heavy particle is shown for $\Theta = 0.9$, which means $T = 5600$, and $\log P_e = 1.0$. The contributions from the bound-free and free-free continua of H^- are dominant. The small contribution from the Balmer continuum of hydrogen is visible at $\log \lambda = 3.562$. $\bar{\kappa}_R$ is the Rosseland mean absorption coefficient; see section 8.4.

16 500 Å, depending on the temperature and the relative importance of the free-free and bound-free absorption.

We have seen earlier how we can test the frequency dependence of the absorption coefficient in the sun by means of the center-to-limb variation of the intensities in different frequencies (see Section 6.2). We can now see that the measured and the theoretical wavelength dependences do indeed agree quite well.

7.5 The helium absorption in the sun

Helium is the most abundant element after hydrogen. Could the helium atom be important for the continuous absorption in the sun or in other stars? Helium has an ionization energy of about 24 eV. The first excited states have excitation energies of about 20 eV. For solar temperatures the number of atoms in the first excited state can again be estimated from the Boltzmann formula

$$\log \frac{N_{\mathrm{He}}(n=2)}{N_{\mathrm{He}}(n=1)} \sim 0.9 - 20.0\theta \approx -16.$$

Only a fraction of 10^{-16} of the He atoms can contribute to the absorption. Since helium is about 10% as abundant as hydrogen, only one out of 10^{17} atoms are helium atoms in the second quantum level. The helium absorption from the ground level can only occur for wavelengths shorter than 500 Å, where there is very little radiation coming from the sun.

7.6 The metallic absorption in the sun

Let us now look at the metals, such as iron. Its abundance is roughly 10^{-4} times that of hydrogen. The ionization energy is 7.9 eV. Let us compute the number of iron atoms which can absorb at 4000 Å. 4000 Å corresponds to an energy $h\nu$ of 3.1 eV. Fig. 7.6 shows that the atoms have to be in a state which has an excitation energy greater than 4.8 eV if they are to absorb at 4000 Å. The iron atom has many energy levels. We can therefore assume that it has one at this particular energy. If we assume that the statistical weights of the different levels are all equal, we can get a rough estimate for the number of atoms in the state with an excitation energy of 4.8 eV by again applying the Boltzmann formula

$$\log \frac{\mathrm{Fe}(\chi_n)}{\mathrm{Fe}(\chi=0)} = -4.8 \times 0.84 = -4.03 \qquad \text{or} \qquad \frac{\mathrm{Fe}(\chi_n)}{\mathrm{Fe}(\chi=0)} = 10^{-4}.$$

With an iron abundance $N(Fe)/N(\mathrm{H}) \approx 10^{-4}$, it seems that the number of neutral Fe atoms absorbing at 4000 Å could be comparable with the number of H^- ions. However, we also have to consider the degree of ionization of iron, which can be obtained from the Saha equation.

$$\log \frac{\mathrm{Fe}^+}{\mathrm{Fe}} = -0.48 + \tfrac{5}{2}\log T - 7.9\Theta - \log P_e$$
$$= -0.48 + 9.45 - 6.64 - 1.5 = 0.8,$$

where we have assumed $2u^+/u \approx 1$, which is not quite correct, but accurate enough for this order of magnitude estimate.

In the solar atmosphere, iron is mainly ionized. This reduces the number of neutral iron atoms by roughly a factor of 10. Therefore, at 4000 Å the metals are not important, but let us make the same kind of estimate for a wavelength of 2000 Å. This wavelength corresponds to an energy of 6.2 eV. Therefore, iron atoms only need an excitation energy of $7.9 - 6.2\,\mathrm{eV} = 1.7\,\mathrm{eV}$. According to the Boltzmann formula, we find for this excitation energy a fraction of excited Fe atoms of

$$\log \frac{\mathrm{Fe}(\chi_n)}{\mathrm{Fe}(\chi = 0)} = -1.7 \times 0.84 = -1.43 \qquad \text{or} \qquad \frac{\mathrm{Fe}(\chi_n)}{\mathrm{Fe}(\chi = 0)} = 3.7 \times 10^{-2}.$$

Considering the degree of ionization and multiplying this with the abundance ratio of Fe, we obtain the fraction of Fe atoms absorbing at 2000 Å relative to the number of neutral hydrogen atoms to be about 6×10^{-7}, while the ratio of H^- ions to the number of neutral hydrogen atoms is 3×10^{-8}, as we saw in Section 7.3. For the absorption at 2000 Å, we have roughly 20 times as many Fe atoms in the appropriate state of excitation than we have H^- ions. At these short wavelengths the metallic atoms are therefore much more important for the absorption than the H^- ion or the neutral hydrogen atom.

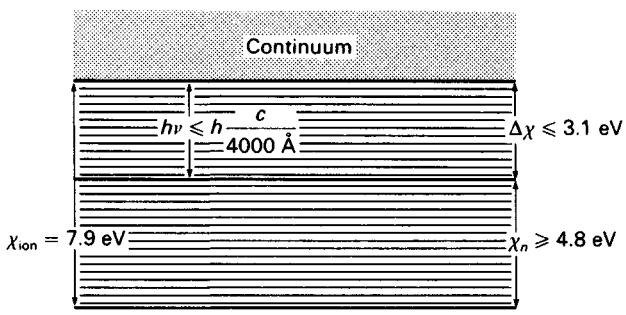

Fig. 7.6. Schematic energy level diagram for iron. All iron atoms with excitation energies $\chi_n > 4.8$ eV can contribute to the bound-free transitions for $\lambda < 4000$ Å.

Even more important is the absorption by the metal atoms in the ground level which for the iron atoms occurs for wavelengths shorter than 1570 Å, and for the Si atoms with an ionization energy of 8.15 eV at a wavelength of 1520 Å. We find a very pronounced discontinuity in the overall absorption coefficient at these wavelengths which leads to very pronounced discontinuities in the observed energy distributions of A, F and G stars, as we shall soon see.

7.7 Scattering by atoms and ions

In the classical picture of an atom we can consider the electron as being bound to the atom. Any force trying to remove it will be counteracted by an opposing force trying to bring it back into its equilibrium position. The situation is similar to the picture of an electron bound to the nucleus by some sort of spring (see Fig. 7.7). Such a spring would start to oscillate if a force were to try to pull on the electron and then let go. It would oscillate with certain eigenfrequencies $\omega_r = 2\pi\nu_r$, which are determined by the restoring force. The stiffer the spring, the more rapid the oscillations will be. In the case of the atom, the oscillation frequencies are determined by the Coulomb forces of the nucleus. For the hydrogen atom in the ground state the frequencies of the Lyman lines are the eigenfrequencies. Going back again to the picture of the spring, we can see that if somebody tries to make it oscillate with a frequency ω, the amplitudes would get larger the closer ω is to any of the resonance frequencies or eigenfrequencies ω_r. We can calculate that the amplitude would be proportional to $(\omega_r^2 - \omega^2)^{-1}$ if there is no damping. We know that light consists of electromagnetic

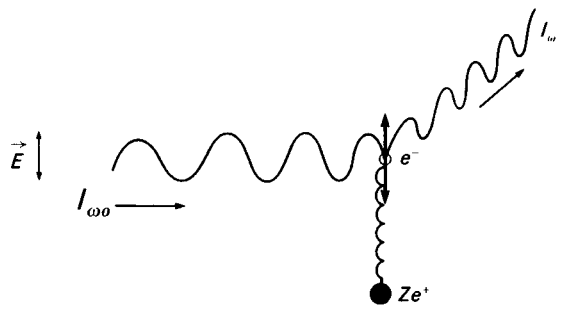

Fig. 7.7. The electron bound to the nucleus of an atom will start oscillating in the electric field E of the lightwave with intensity $I_{\omega o}$. This oscillation will cause it to radiate into all directions. The emission I_ω has the frequency ω of the forced oscillation, which means the emitted light has the same frequency as the original light beam. The light is scattered, but mainly in the directions perpendicular to the direction of oscillation.

waves, which means that in the presence of light the electron bound to the atom experiences an oscillating electric field which excites the bound electron to oscillations. The amplitude of these oscillations is also proportional to $(\omega_r^2 - \omega^2)^{-1}$. The electron in the atom has many eigenfrequencies ω_r, namely, all the Lyman lines in the case of the hydrogen atom. All the resonance frequencies contribute to the amplitude of oscillation. The probability of each resonance frequency contributing is given by the so-called oscillator strength f_r, describing the probability for that particular wavelength to be absorbed or emitted by the atom. This oscillator strength f_r is, of course, the same quantity which also determines the relative strengths of the Lyman lines.

If an electron is oscillating, it is accelerated. Each accelerated charge radiates; therefore, the oscillating electron also radiates. The radiated intensity is proportional to the square of the acceleration, which is $\ddot{x}$ if the displacement is called x. We describe the oscillating displacement x by

$$x = A \cos \omega t, \qquad \text{where } \omega = 2\pi\nu,$$

then

$$\dot{x} = -\omega A \sin \omega t$$

which gives

$$\ddot{x} = -\omega^2 A \cos \omega t. \tag{7.18}$$

The radiated intensity is then proportional to

$$\ddot{x}^2 = x^2\omega^4. \tag{7.19}$$

If damping is neglected, the emission corresponding to each eigenfrequency ω_r turns out to be

$$\text{Emission} = I_\omega \propto \frac{\omega^4}{(\omega_r^2 - \omega^2)^2}. \tag{7.20}$$

As we said earlier, for the neutral hydrogen atom the resonance frequencies correspond to the Lyman lines which are in the far ultraviolet. For the optical region we therefore find $\omega_r \gg \omega$ such that the scattering coefficient, also called the *Rayleigh scattering coefficient*, σ_R, is

$$\sigma_R \propto C \sum_r f_r \left(\frac{\omega^2}{\omega_r^2 - \omega^2}\right)^2 \approx \sum_r C \frac{f_r \omega^4}{\omega_r^4}, \tag{7.21}$$

if we again neglect the damping. We can replace this by writing

$$\sigma_R = C \frac{\omega^4}{\bar{\omega}_r^4}$$

with the definition

$$\frac{1}{\bar{\omega}_r^4} = \sum_r \frac{f_r}{\omega_r^4}, \qquad \text{where } C = \frac{8\pi}{3}\left(\frac{e^2}{mc^2}\right)^2, \tag{7.22}$$

and m and e are again electron mass and charge. Since for the hydrogen atom $\sum f_r = 1$ for all transitions from the ground level, one finds that $\bar{\omega}_r = \omega_0$ differs only little from ω for Lyman α; it actually corresponds to 1026 Å. The Lyman α line has a wavelength of 1215 Å.

For the Rayleigh scattering coefficient σ_R the final expression is

$$\sigma_R \text{ per atom} = C\left(\frac{\omega}{\omega_0}\right)^4 = C\left(\frac{\lambda_0}{\lambda}\right)^4 \propto \frac{1}{\lambda^4}, \qquad 7.23$$

i.e., σ_R is steeply increasing towards the blue.

The light of our sky is scattered sunlight; scattered by the molecules in our atmosphere. From equation (7.23) we see that the scattering coefficient increases steeply towards shorter wavelengths. The amount of scattered light which we see in the sky also increases steeply towards shorter wavelengths, which means towards the blue. Therefore, the sky appears blue to us.

In the modern picture of the atoms, we would have to think about the Rayleigh scattering on hydrogen atoms as the sum of the overlapping Lyman line wings. However, only the pure scattering fraction is considered. Lyman α is the most important line.

7.8 Thomson scattering by free electrons

We still have to consider the electrons which are not bound to an atom. There is no restoring force; their eigenfrequencies are zero. We then find, according to equation (7.20), that

$$\sigma_{el} \propto C\frac{\omega^4}{\omega^4} = C, \qquad 7.24$$

which means the scattering coefficient is independent of wavelength. The value of C is the same as in equation (7.22). It comes out to be

$$\sigma_{el} = \frac{8\pi}{3}\left(\frac{e^2}{mc^2}\right)^2 \qquad 7.25$$

per electron, or

$$\sigma_{el} = 0.66 \times 10^{-24}\ \text{cm}^2.$$

This is the *Thomson scattering coefficient*. The Rayleigh scattering coefficient can then be written as

$$\sigma_R = \sigma_{el}\left(\frac{\omega}{\omega_0}\right)^4. \qquad 7.26$$

Quantum mechanical calculations give slightly lower values, especially if the frequencies are close to the resonance frequencies. We should have considered the damping due to the radiation.

Numerically, the electron scattering coefficient per free electron comes out to be $\sigma_{el} = 0.66 \times 10^{-24}\ \mathrm{cm}^2$. The absorption coefficient per neutral hydrogen atom at the Lyman limit is of the order $10^{-17}\ \mathrm{cm}^2$. The number of free electrons in the solar atmosphere as compared to the number of hydrogen atoms is given approximately by the ratio of the electron pressure to the gas pressure, which is 3×10^{-3}. Compared to the abundance of the H^- ions the electrons are much more abundant, but since the scattering coefficient is so much lower than the absorption coefficient per atom or ion in the ground state, electron scattering is not important in the solar atmosphere. But this is different in stars where all the atoms are ionized. Considering the Rayleigh scattering by hydrogen atoms, we gain a factor 3×10^3 because the hydrogen atoms are so much more abundant in the sun than the electrons. At the shorter wavelengths, i.e., $\lambda \ll 3000$ Å, the contribution of Rayleigh scattering in the sun is not negligible, although the metallic absorption coefficients are generally larger than the Rayleigh scattering coefficient.

Altogether, we find absorption coefficients in the solar atmosphere as shown in Fig. 7.8, which closely resembles the wavelength dependence

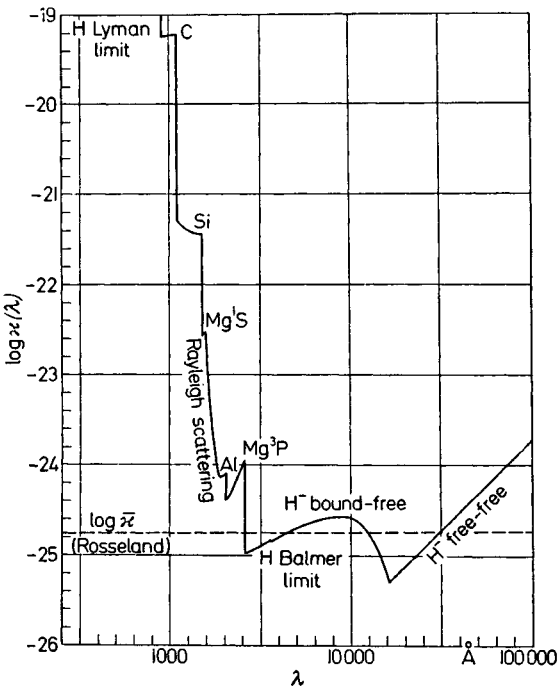

Fig. 7.8. The wavelength dependence of the continuous absorption coefficient per particle is shown for $T_{eff} = 5040$ K ($\Theta = 1.0$) and $\log P_e = 0.5$.

determined empirically by Chalonge and Kourganoff (1946) for the solar atmosphere.

7.9 Absorption coefficients for A and B stars

For solar temperatures we found that the H^- ion contributes most to the continuous absorption because only hydrogen atoms in the third quantum level can absorb in the visual region. For solar temperatures the number of hydrogen atoms in the third quantum level is very small. For stars with higher temperatures this situation may well change.

Let us look now at the situation in an A star with $T \approx 10\,000$ K, $\log P_e = 3.0$, $\log T = 4.0$, $\Theta = 0.5$.

For the number of H^- ions we now obtain

$$\log \frac{N(\mathrm{H})}{N(\mathrm{H}^-)} = 0.6 - 0.48 + 10.0 - 0.35 - 3.0 \approx +6.8.$$

The ratio of H^-/H is decreased by only a factor of 5 as compared to the ratio in the sun. However, if we now compute the number of hydrogen

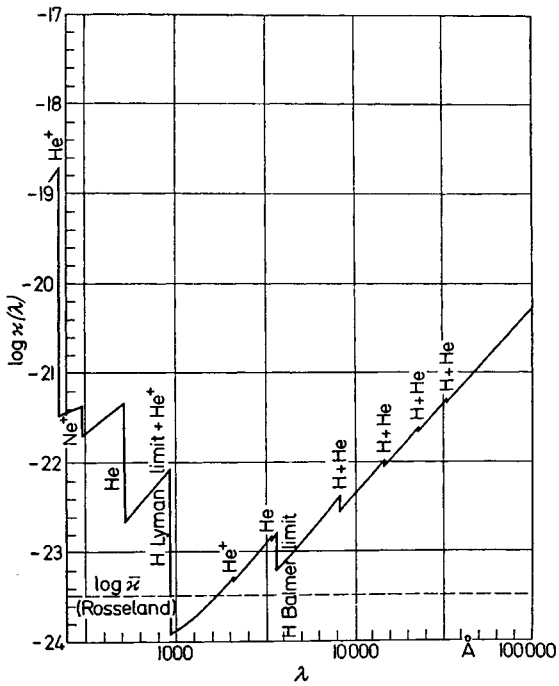

Fig. 7.9. The continuous absorption coefficient per particle is shown as a function of wavelength for a temperature of 28 300 K and $\log P_e = 3.5$ as appropriate for a main sequence B0 star. (From Unsöld, 1977, p. 159.)

atoms in the level with $n = 3$, i.e. in the Paschen level, we find

$$\log \frac{N_{\mathrm{H}}(n=3)}{N_{\mathrm{H}}(n=1)} = 0.95 - 12.1\Theta = 0.95 - 6.05 = -5.10;$$

this number has increased by a factor 10^4. We now have about 100 times more hydrogen atoms in the Paschen level than we have H^- ions. The absorption of neutral hydrogen is now much more important than that of H^-. Therefore, for A stars we find large discontinuities of κ at the Paschen and Balmer limits.

In Fig. 7.9 we show the wavelength dependence of the absorption coefficient for a temperature of 28 300 K and an electron pressure $\log P_e = 3.5$. These values are appropriate for a B0 star on the main sequence. The hydrogen absorption coefficient is still the most important one in the visual. At very short wavelengths the helium absorption becomes noticeable. At low points in the hydrogen absorption, such as around 3700 Å, just before the Balmer absorption edge the electron scattering σ_{el} fills in. For increasing temperatures the electron scattering becomes increasingly more important.

When in the following we talk about the continuous κ_c we always include the electron and Rayleigh scattering.