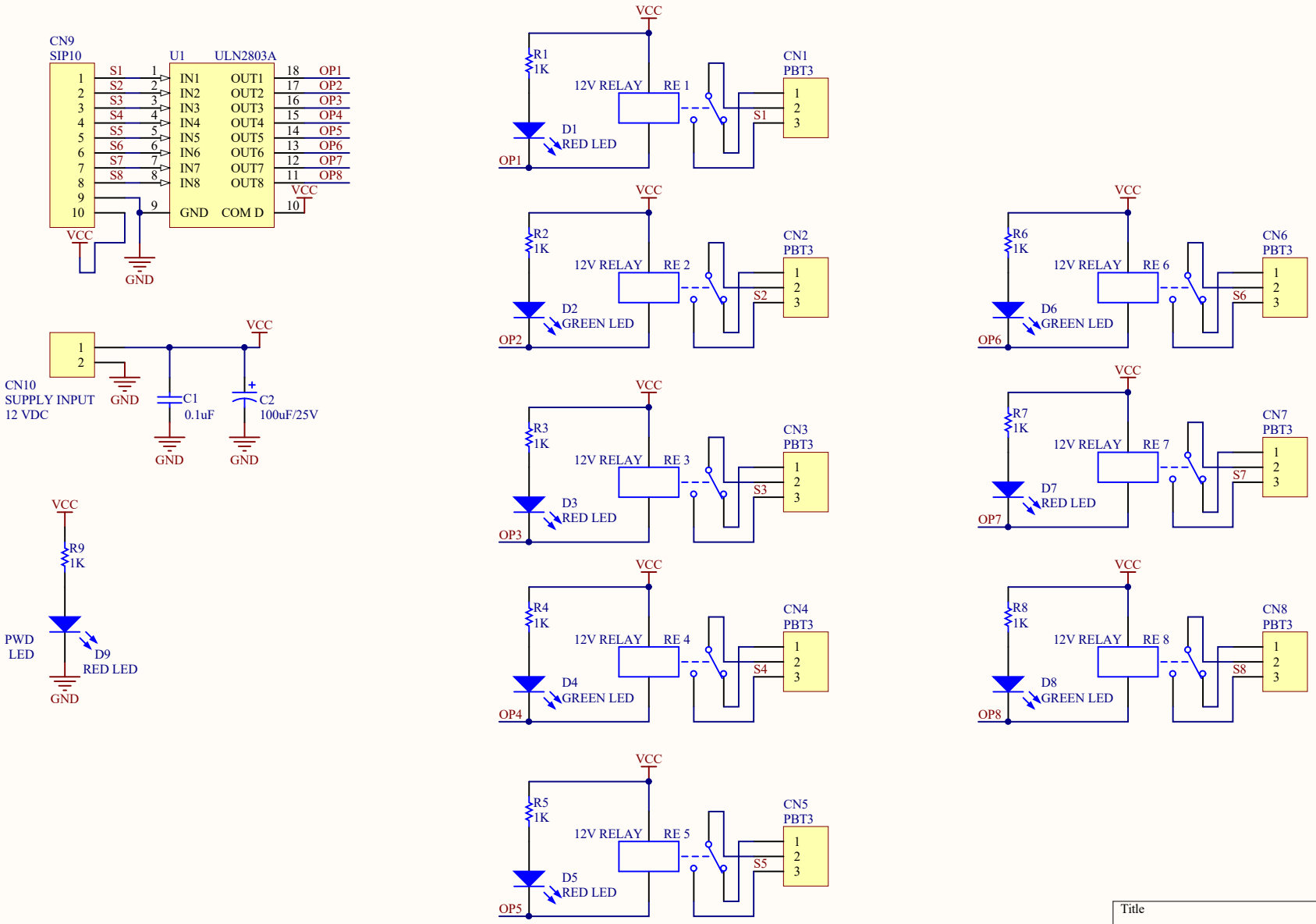

Title		
Size A4	Number	Revision
Date: 21-01-2025	Sheet of	
File: E:\PCB INTERN training aswath\..\CHANNEL RELAY CARD.SchDoc	Drawn By:	

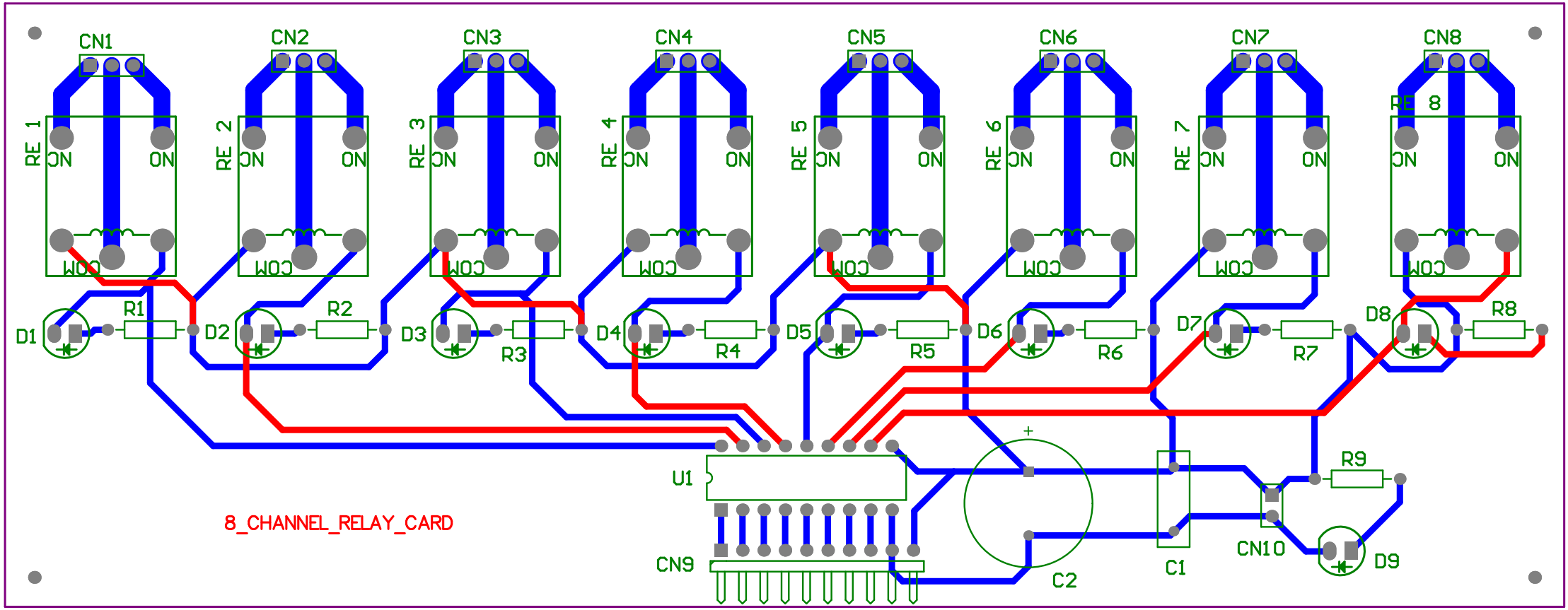
CN1
CN2
CN3
CN4
CN5
CN6
CN7
CN8
RE 1
RE 2
RE 3
RE 4
RE 5
RE 6
RE 7
RE 8
NC
NO
COM
D1
D2
D3
D4
D5
D6
D7
D8
D9
R1
R2
R3
R4
R5
R6
R7
R8
R9
U1
CN9
CN10
C1
C2
8_CHANNEL_RELAY_CARD

Comment	Description	Designator	Footprint	LibRef	Quantity
Cap	Capacitor	C1	RAD-0.3	Cap	1
Cap Pol1	Polarized Capacitor (Radial)	C2	RB7.6-15	Cap Pol1	1
PBT3	Header, 3-Pin	CN1, CN2, CN3, CN4, CN5, CN6, CN7, CN8	HDR1X3	Header 3	8
SIP10	Header, 10-Pin, Right Angle	CN9	HDR1X10H	Header 10H	1
SUPPLY INPUT	Header, 2-Pin	CN10	HDR1X2	Header 2	1
RED LED	LED_THT	D1, D3, D5, D7, D9	5mm_LED	LED_THT	5
GREEN LED	LED_THT	D2, D4, D6, D8	5mm_LED	LED_THT	4
1K	Resistor_THT	R1, R2, R3, R4, R5, R6, R7, R8, R9	Res 0.25W	Resistor_THT	9
12V RELAY	Relay Sugacube	RE 1, RE 2, RE 3, RE 4, RE 5, RE 6, RE 7, RE 8	Relay_Sugarcube	Relay Sugacube	8
ULN2803A	High-Voltage, High-C	U1	A18	ULN2803A	1