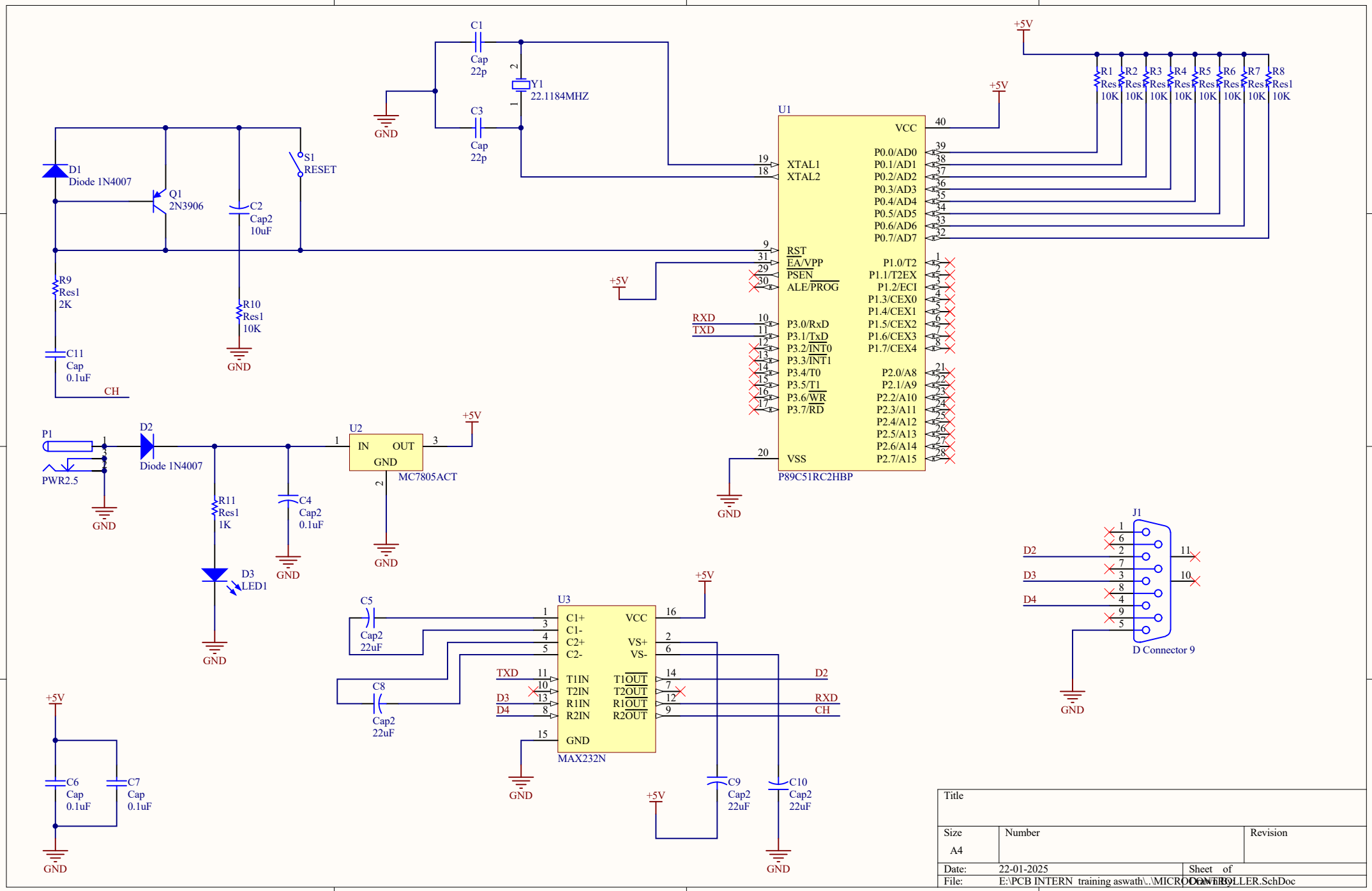
C1
Cap
22p
Y1
22.1184MHZ
C3
Cap
22p
GND
+5V
R1 Res1 10K
R2 Res1 10K
R3 Res1 10K
R4 Res1 10K
R5 Res1 10K
R6 Res1 10K
R7 Res1 10K
R8 Res1 10K
U1
VCC
XTAL1
XTAL2
RST
EA/VPP
PSEN
ALE/PROG
P3.0/RxD
P3.1/TxD
P3.2/INT0
P3.3/INT1
P3.4/T0
P3.5/T1
P3.6/WR
P3.7/RD
VSS
P0.0/AD0
P0.1/AD1
P0.2/AD2
P0.3/AD3
P0.4/AD4
P0.5/AD5
P0.6/AD6
P0.7/AD7
P1.0/T2
P1.1/T2EX
P1.2/ECI
P1.3/CEX0
P1.4/CEX1
P1.5/CEX2
P1.6/CEX3
P1.7/CEX4
P2.0/A8
P2.1/A9
P2.2/A10
P2.3/A11
P2.4/A12
P2.5/A13
P2.6/A14
P2.7/A15
P89C51RC2HBP
RXD
TXD
D1
Diode 1N4007
Q1
2N3906
C2
Cap2
10uF
S1
RESET
R9
Res1
2K
R10
Res1
10K
C11
Cap
0.1uF
CH
P1
PWR2.5
D2
Diode 1N4007
U2
IN
OUT
GND
MC7805ACT
R11
Res1
1K
C4
Cap2
0.1uF
D3
LED1
C5
Cap2
22uF
C8
Cap2
22uF
U3
C1+
C1-
C2+
C2-
T1IN
T2IN
R1IN
R2IN
VCC
VS+
VS-
T1OUT
T2OUT
R1OUT
R2OUT
MAX232N
D3
D4
C6
Cap
0.1uF
C7
Cap
0.1uF
C9
Cap2
22uF
C10
Cap2
22uF
J1
D Connector 9
Title
Size
A4
Number
Revision
Date:
22-01-2025
Sheet of
File:
E:\PCB INTERN training aswath\..\MICROCONTROLLER.SchDoc
Drawn By:

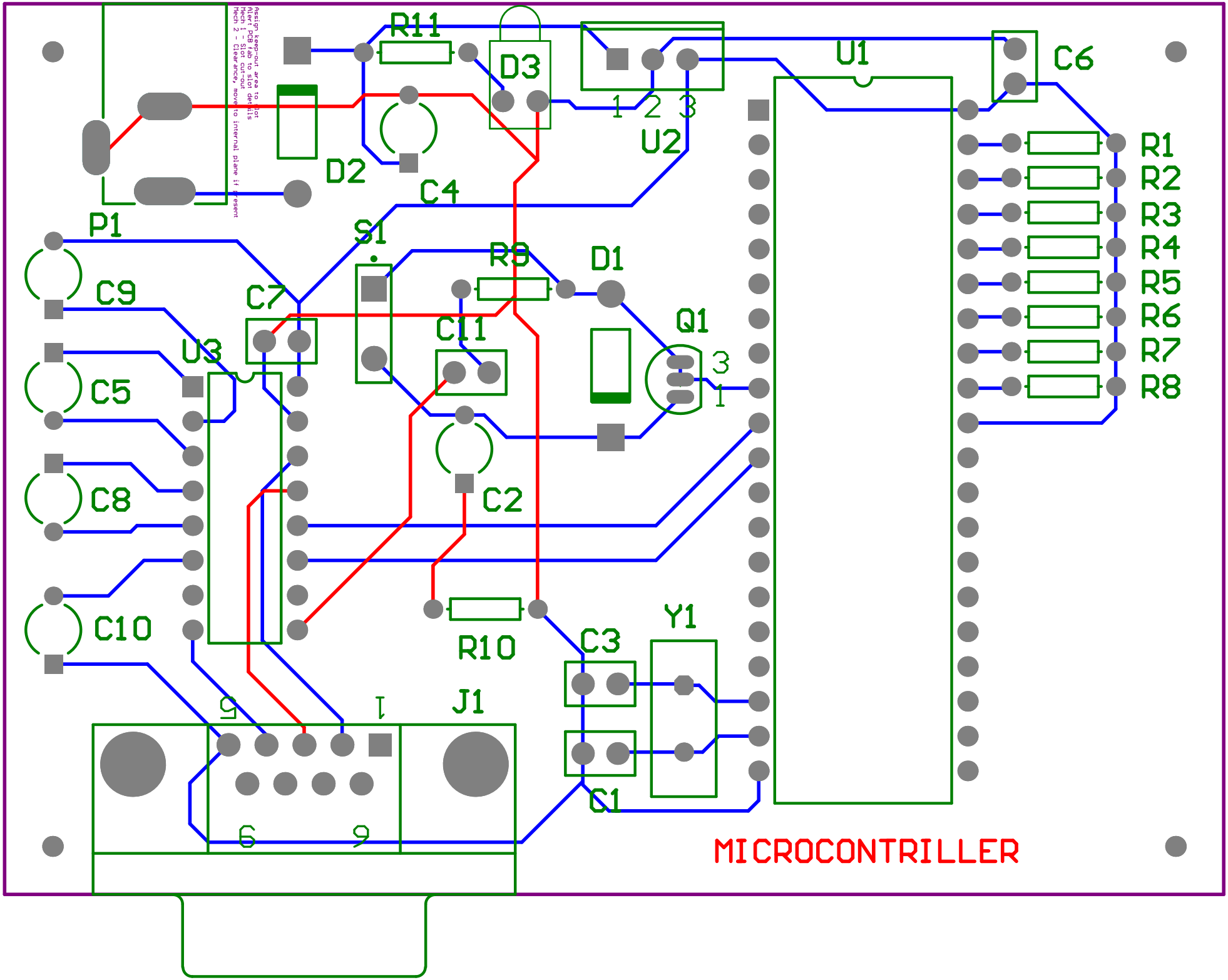
Assign keep-out area to slot
Alert PCB fab to slot details
Mech 1 - Slot cut-out
Mech 2 - Clearance, move to internal plane if present
R11
D3
U1
C6
1
2
3
U2
D2
C4
R1
R2
R3
R4
R5
R6
R7
R8
P1
S1
R9
D1
C9
C7
C11
Q1
3
1
U3
C5
C2
C8
C10
R10
C3
Y1
5
1
J1
6
9
C1
MICROCONTRILLER

Comment	Description	Designator	Footprint	LibRef	Quantity
Cap	Capacitor	C1, C3, C6, C7, C11	CAPR2.54-5.1x3.2	Cap	5
Cap2	Capacitor	C2, C4, C5, C8, C9, C10	CAPR5-4X5	Cap2	6
Diode 1N4007	1 Amp General Purpose Rectifier	D1, D2	DIO10.46-5.3x2.8	Diode 1N4007	2
LED1	Typical RED GaAs LED	D3	LED-1	LED1	1
D Connector 9	Receptacle Assembly, 9 Position, Right Angle	J1	DSUB1.385-2H9	D Connector 9	1
PWR2.5	Low Voltage Power Supply Connector	P1	KLD-0202	PWR2.5	1
2N3906	PNP General Purpose Amplifier	Q1	BCY-W3/E4	2N3906	1
Res1	Resistor	R1, R2, R3, R4, R5, R6, R7, R8, R9, R10, R11	AXIAL-0.3	Res1	11
RESET	Single-Pole, Single-Throw Switch	S1	SPST-2	SW-SPST	1
P89C51RC2HBP	80C51 8-Bit Flash Microcontroller Family, 32 kB ISP/IAP Flash with 512 B RAM.	U1	SOT129-1	P89C51RC2HBP	1
MC7805ACT	3-Terminal Positive Fixed Voltage Regulator	U2	221A-04	MC7805ACT	1
MAX232N	Dual EIA-232 Driver/Receiver	U3	N016	MAX232N	1
22.1184MHZ	Crystal Oscillator	Y1	HC-49U	ECS-18-13-1	1