MCU

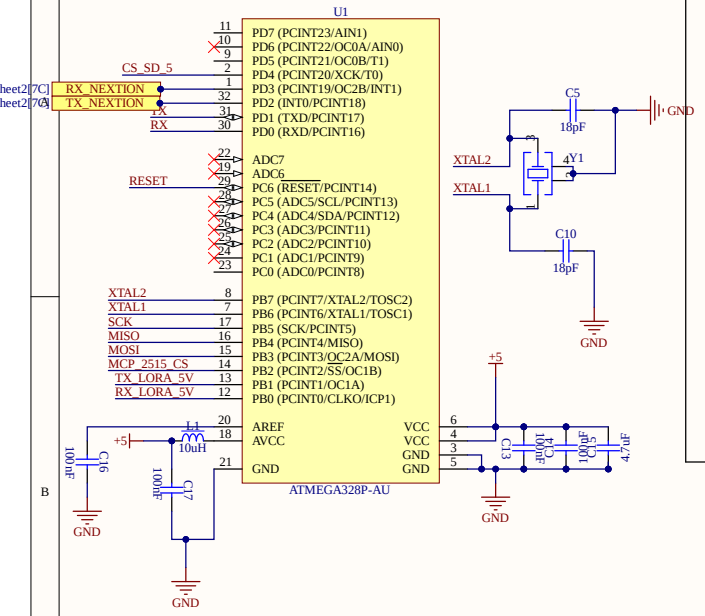

SD CARD

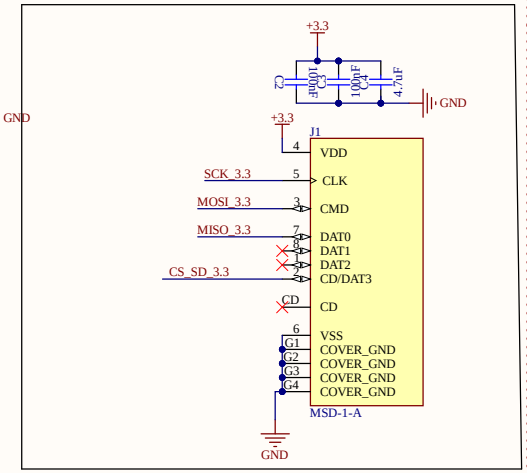

USB-TO-UART

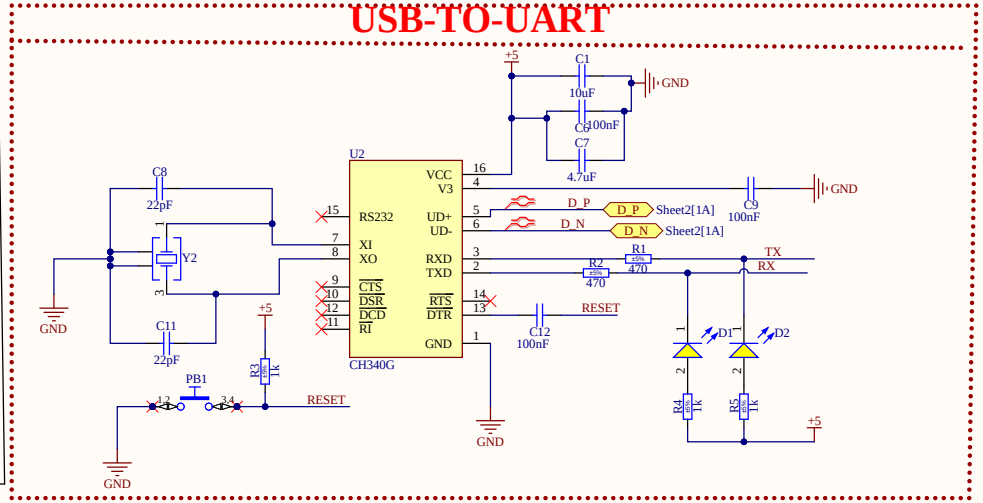

LOGIC SHIFTER

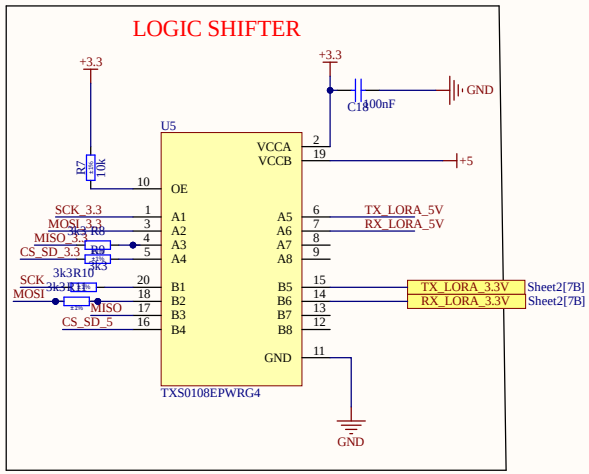

CAN BUS

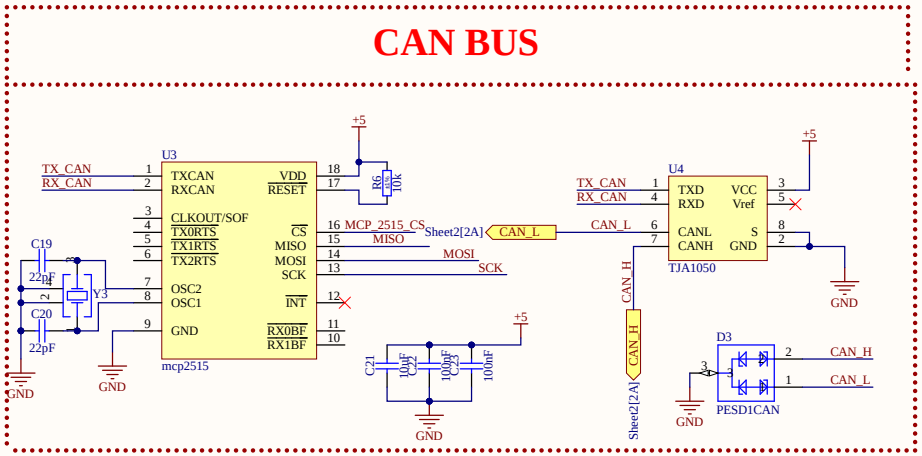

DOSYA ADI / FILE NAME: Sheet1.SchDoc	TANIM / DESCRIPTION	
	HAZIRLAYAN / PREPARED BY	YAYIN TARİHİ / REL. DATE
	KONTROL EDEN / CHECKED BY: *	DEĞ. TARİHİ / CHANGE DATE
	ONAYLAYAN / APPROVED BY: *	REVİZYON / REVISION: *
	BÖLÜM / DEPARTMENT: R&D- Hardware	BOYUT / SIZE: A3 — SAYFA / SHEET: 1 / 2

USB

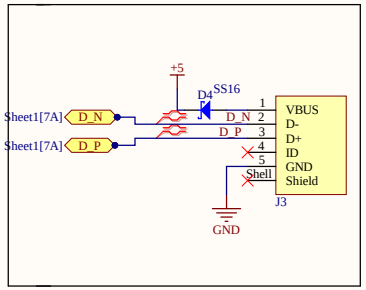

CAN BUS soketi

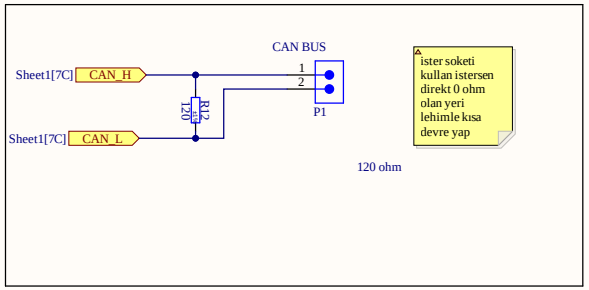

lora modülü(m0,m1, 3.3v besleme
nextion ekran
sd kart modülü

LORA CONNECTION

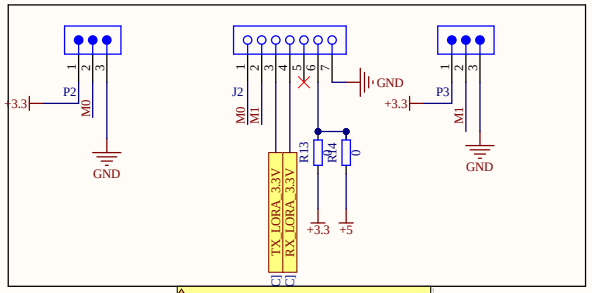

LORAnın 3 numaralı pini rx biz burdan tx
bağlaaycağız. aynı şekilde 4 de öyle

12 VDC to 5VDC

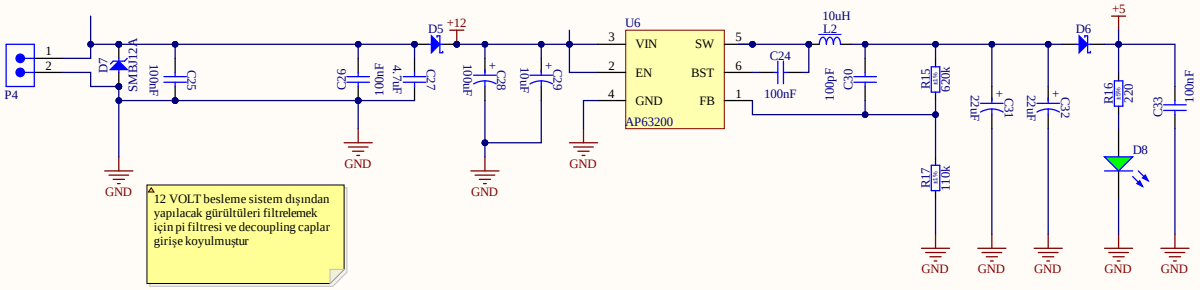

12 VOLT besleme sistem dışından
yapılacak gürültüleri filtrelemek
için pi filtresi ve decoupling caplar
girişe koyulmuştur

12 VDC to 3.3 VDC

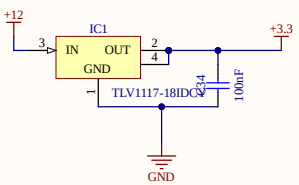

NEXTION CONNECTION

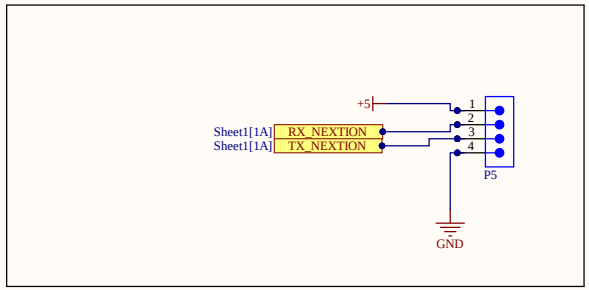

DOSYA ADI / FILE NAME: Sheet2.SchDoc	TANIM / DESCRIPTION	
	HAZIRLAYAN / PREPARED BY	YAYIN TARİHİ / REL. DATE
	KONTROL EDEN / CHECKED BY: *	DEĞ. TARİHİ / CHANGE DATE
	ONAYLAYAN / APPROVED BY: *	REVİZYON / REVISION: *
	BÖLÜM / DEPARTMENT: R&D- Hardware	BOYUT / SIZE: A3 — SAYFA / SHEET: 2 / 2

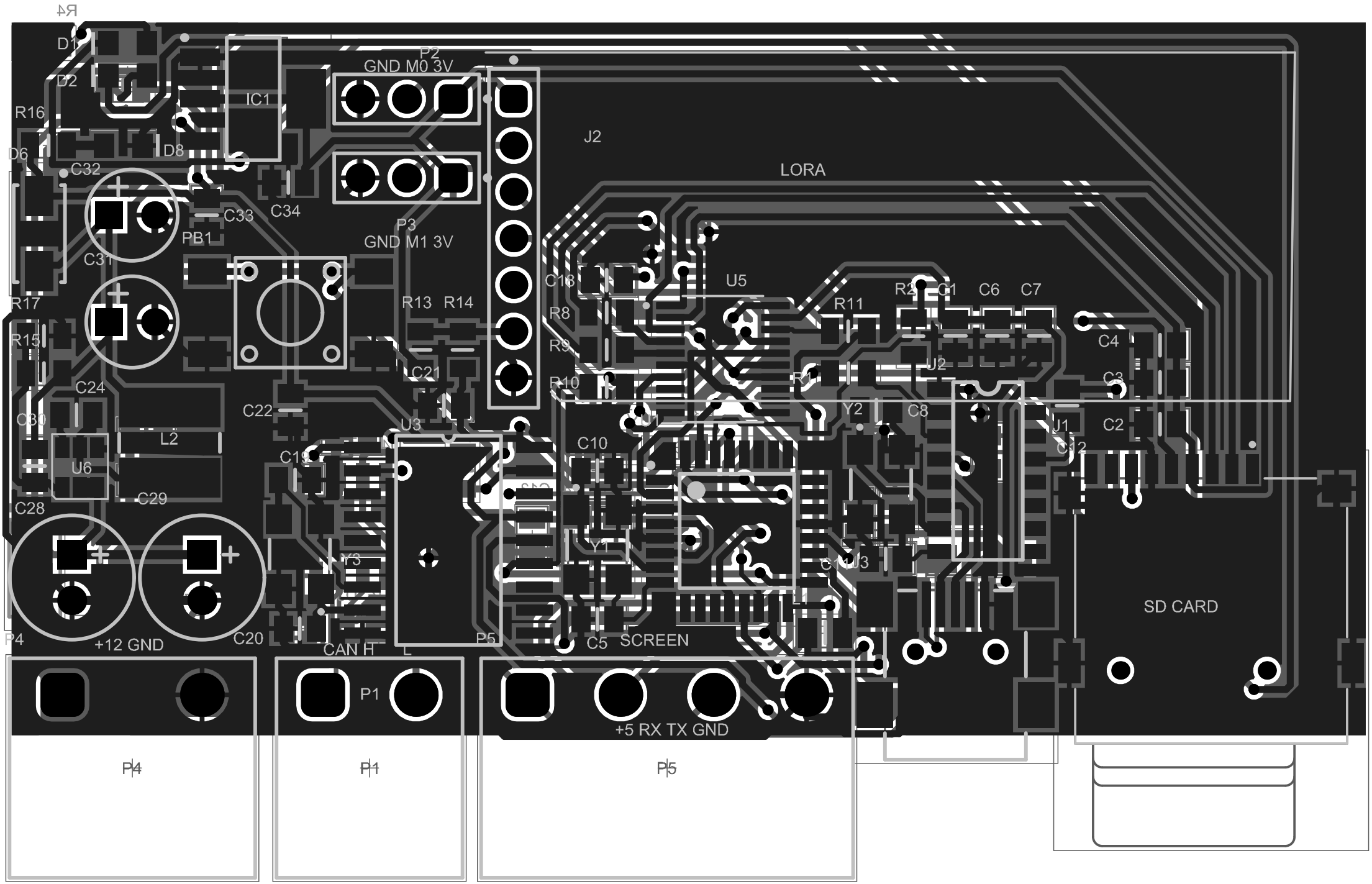

R4
D1
D2
R16
D6
D8
IC1
P2
GND M0 3V
J2
LORA
C32
C33
C34
PB1
C31
P3
GND M1 3V
R17
R13
R14
C18
U5
R11
R2
C1
C6
C7
R8
R9
R15
C4
C21
R10
J2
C3
C24
C22
Y2
C8
C30
U3
J1
C2
L2
C10
C12
U6
C19
C28
C29
Y1
Y3
C11
U3
SD CARD
P4
+12 GND
C20
CAN H
L
P5
C5
SCREEN
P1
+5 RX TX GND
P4
P1
P5

Comment	Description	Designator	Footprint	LibRef	Quantity
10uF	Non-polarised capacitor	C1, C21	CAPC2012X135N	CC0805_10UF_16V_10%_X5R CC0805_10UF_10V_10%_X7R	2
100nF	Non-polarised capacitor	C2, C3, C5, C9, C12, C13, C14, C16, C17, C18, C22, C23, C24, C25, C26, C33, C34	CAPC2012X135N	CC0805_100NF_50V_10%_X7R	17
4.7uF	Non-polarised capacitor	C4, C7, C15, C27	CAPC2012X135N	CC0805_4.7UF_10V_10%_X5R	4
18pF	Non-polarised capacitor	C5, C10	CAPC2012X135N	CC0805_18PF_50V_5%_NP0	2
22pF	Non-polarised capacitor	C8, C11, C19, C20	CAPC2012X135N	CC0805_22PF_50V_5%_NP0	4
100uF	Polarised capacitor	C28	CAPPR250-680X1250	CAER_100UF_25V_20%_NICHICON_UPSIE1E101MED	1
10uF	Polarised capacitor	C29	CAPPR250-680X1250	CAER_100UF_25V_20%_NICHICON_UPSIE1E101MED	1
100pF	Non-polarised capacitor	C30	CAPC2012X135N	CC0805_100PF_50V_5%_NP0	1
22uF	Polarised capacitor	C31, C32	CAPPR250-500X1100	CAER_47UF_25V_20%_250-500X1100	2
Yellow, 2V, 140°	WL-SMCW Mono-color Chip LED Waterclear, size 0805, Yellow, 2V, 140°	D1, D2	WL-SMCW_0805_150080ww75000	150080YS75000	2
PESD1CAN	PESD1CAN Series 50 V 9.3 pF SMT CAN bus ESD Protection Diode - SOT-323	D3	SOT23-3	PESD1CAN	1
SS16	Schottky Diode	D4, D5, D6	DIOM5127X229N	SS16	3
SMBJ12A	Zener Diode	D7	DIOM5336X269N	SMBJ12A	1
Green, 3.2V, 140°	WL-SMCW Mono-color Chip LED Waterclear, size 0805, Green, 3.2V, 140°	D8	WL-SMCW_0805_150080ww75000	150080GS75000	1
TLV1117-18IDCY	3-Terminal Regulator 1=GND 2=OUT 3=IN 4=OUT	IC1	SOT230P700X180-4N	TLV1117-18IDCY	1
MSD-1-A	Micro SD Card Connector, 9 Positions, Connector and Ejector, Push In, Auto Eject Out, Surface Mount, 1.8 mm Height Above Board, Gold Flash	J1	CUI_MSD-1-A	MSD-1-A	1
61300711821	WR-PHD Socket Header, THT, Vertical, pitch 2.54mm, 1 Row, 7P	J2	61300711821	61300711821	1
65100516121	WR-COM Mini USB 2.0 Type B SMT Horizontal 5 Contacts	J3	65100516121	65100516121	1
10uH	Inductor With Core	L1	INDC2014X145N	IND0805_10NH_5%_EPCOS_B82498B	1
10uH	Inductor With Core	L2	IND_TRACO_TCK-047	IND_10UH_20%_TRACO_TCK-047	1
691312510002	WR-TBL Series 312 Open Horizontal PCB Header, THT, pitch 5.08mm, 2p	P1	691312510002	691312510002	1
61300311121	WR-PHD Pin Header, THT, Vertical, pitch 2.54mm, 1 Row, 3P	P2, P3	61300311121	61300311121	2
691312410002	WR-TBL Series 3124 Open Horizontal PCB Header, THT, pitch 7.62mm, 2p	P4	691312410002	691312410002	1
691312510004	WR-TBL Series 312 Open Horizontal PCB Header, THT, pitch 5.08mm, 4p	P5	691312510004	691312510004	1
Push Button	Push-Button Switch SPST	PB1	PB_TYCO_FSM2JSMA	PB_TYCO_FSM2JSMA	1
470	Resistor - 1%	R1, R2	RESC2012X60N	R0805_470R_1%_0.125W_100PPM	2
1k	Resistor - 1%	R3	RESC2012X70N	R0805_1K_1%_0.5W_100PPM_PANASONIC_ERJP	1
1k	Resistor - 5%	R4, R5	RESC2012X60N	R0805_1K_0.1%_0.125W_25PPM	2
10k	Resistor - 1%	R6, R7	RESC2012X60N	R0805_10K_1%_0.125W_100PPM	2
3k3	Resistor - 1%	R8, R9, R10, R11	RESC2012X60N	R0805_3K3_1%_0.125W_100PPM	4
120	Resistor - 1%	R12	RESC2012X60N	R0805_120R_1%_0.125W_100PPM	1
0	Resistor	R13, R14	RESC2012X60N	R0805_0R_JUMPER	2
620k	Resistor - 1%	R15	RESC2012X60N	R0805_62K_1%_0.125W_100PPM	1
220	Resistor - 5%	R16	RESC2012X60N	R0805_680R_1%_0.125W_100PPM	1
110k	Resistor - 1%	R17	RESC2012X60N	R0805_11K_1%_0.125W_100PPM	1
ATMEGA328P-AU	8-bit AVR Microcontroller, 32KB Flash, 1KB EEPROM, 2KB SRAM, 32-Pin TQFP	U1	QFP80P900X900X120-32N	ATMEGA328P-AU	1
CH340G	USB Interface Integrated Circuit	U2	SOIC-16	CH340G	1
mcp2515	MCP2515 Series 5.5 V 1 Mb/s Stand Alone SPI Interface CAN Controller - SOIC-18	U3	SOIC-18 - duplicate	mcp2515	1
TJA1050	RPDSO-G8 TJA1050 Tape & Reel (TR) CANbus interface receiver 70mV 0.075mA 4.9mm 1000Mbps	U4	SOIC-8	TJA1050	1
TXS0108EPWRG4	8-bit bidirectional voltage-level shifter for open-drain and push-pull application 20-TSSOP -40 to 85	U5	SOP65P640X120-20N	TXS0108EPWRG4	1
AP63200	AP63200 Series 1.2 V 2 A Adjustable Synchronous Buck Converter - TSOT-26	U6	TSOT-26	AP63200	1
8MHz	WE-XTAL Quartz Crystal , SMT, CFPX-104, 8MHz, +/-20ppm	Y1, Y3	WE-XTAL_CFPX-104	830056683	2
12MHz	WE-XTAL Quartz Crystal , SMT, CFPX-104, 12MHz, +/-30ppm	Y2	WE-XTAL_CFPX-104	830055999	1