Table of Contents

Page 1	Block diagram, title description page
Page 2	RP2350 Processor File: RP2350.kicad_sch
Page 3	Stepper Motor Driver File: Stepper Motor.kicad_sch
Page 4	Board Connectors File: Connectors.kicad_sch

I wouldn't normally arrange sheets this way; This is an artefact of using Kicad, otherwise I would have made this a flat design. Kicad does not support multi-page flat design

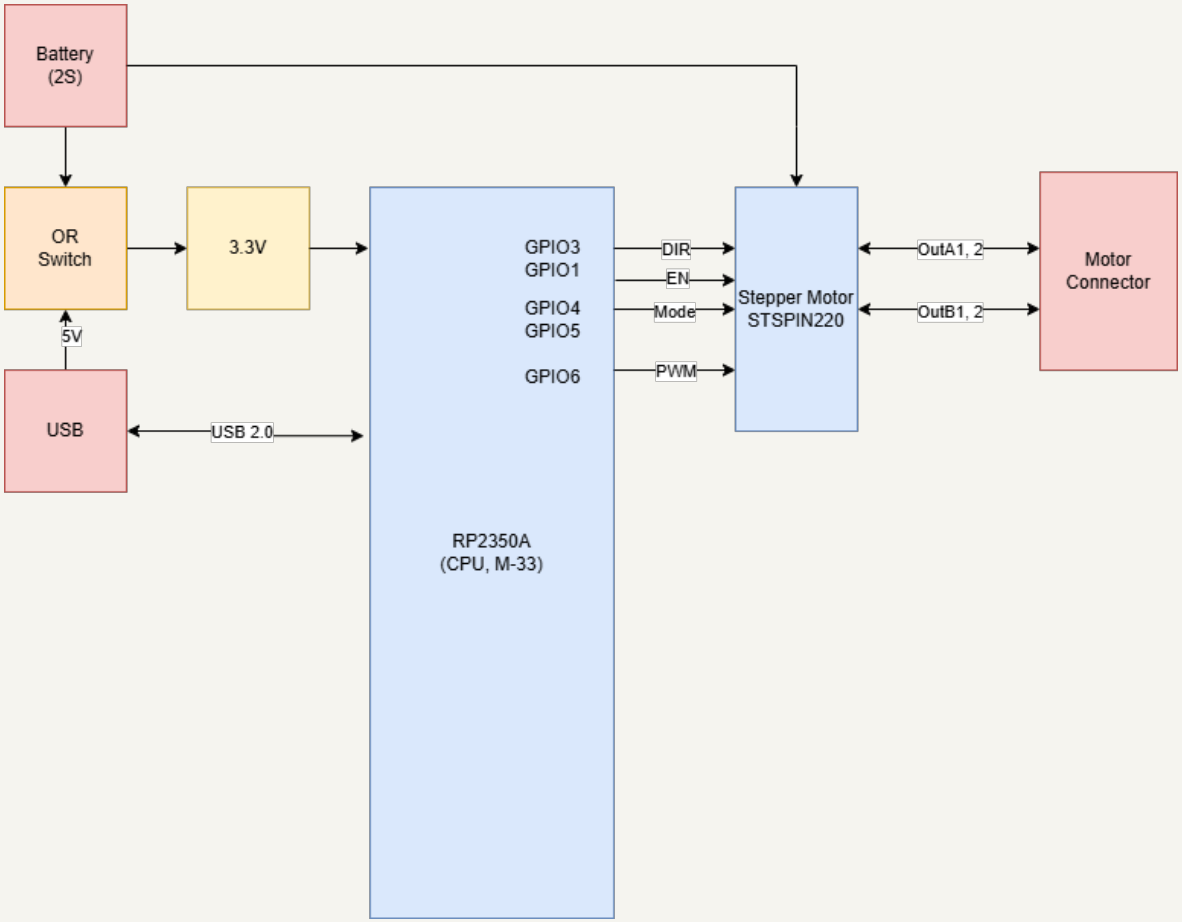

Alec Ross

Sheet: /
File: Stepper_Motor_Controller.kicad_sch

Title: Stepper Motor Controller

Size: A4	Date: 2026-04-21	Rev: AA
KiCad E.D.A. 10.0.1		Id: 1/4

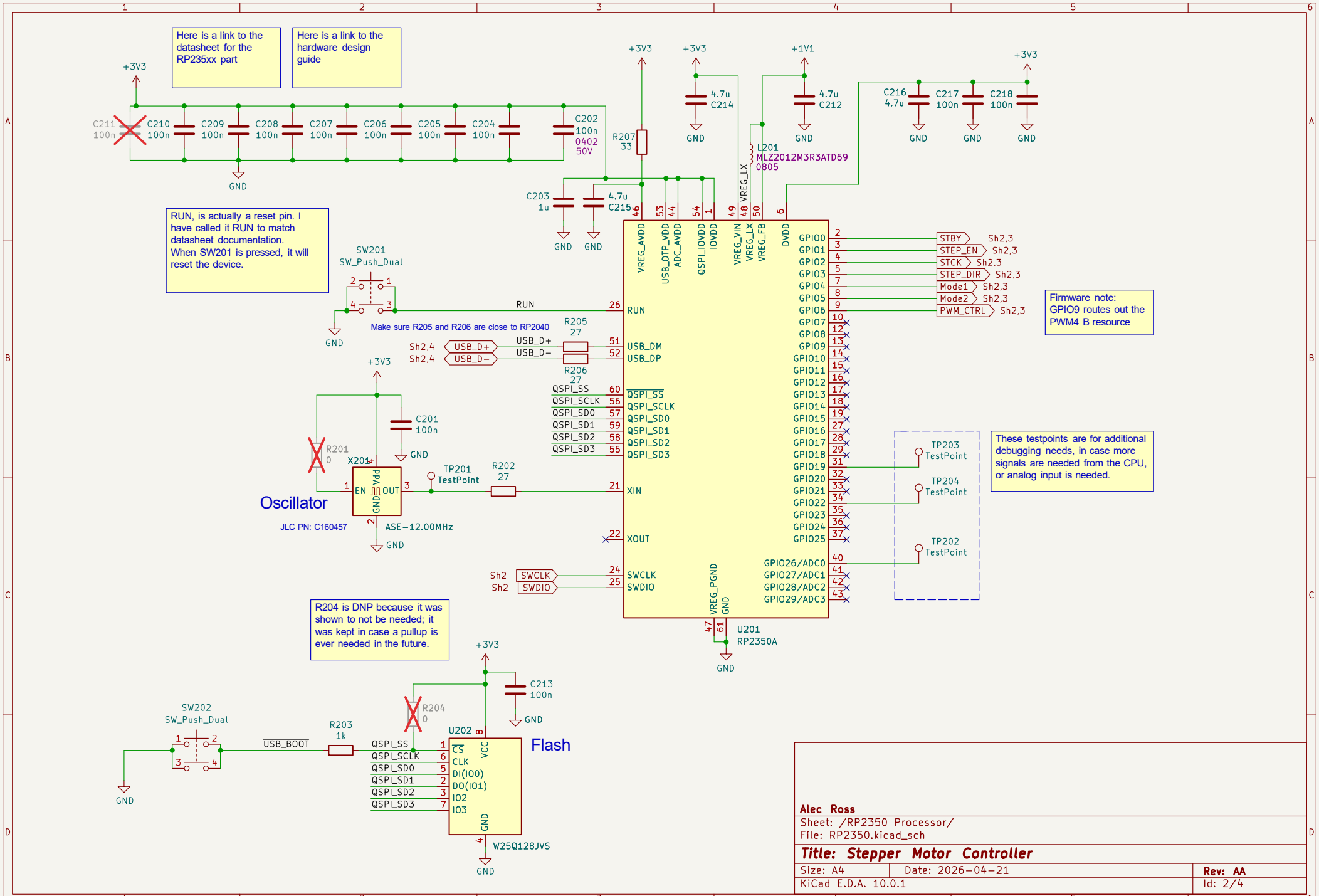
Here is a link to the datasheet for the RP235xx part
Here is a link to the hardware design guide
RUN, is actually a reset pin. I have called it RUN to match datasheet documentation. When SW201 is pressed, it will reset the device.
Make sure R205 and R206 are close to RP2040
Firmware note: GPIO9 routes out the PWM4 B resource
These testpoints are for additional debugging needs, in case more signals are needed from the CPU, or analog input is needed.
R204 is DNP because it was shown to not be needed; it was kept in case a pullup is ever needed in the future.
Oscillator
JLC PN: C160457
ASE-12.00MHz
Flash
U201
RP2350A
W25Q128JVS
Alec Ross
Sheet: /RP2350 Processor/
File: RP2350.kicad_sch
Title: Stepper Motor Controller
Size: A4
Date: 2026-04-21
Rev: AA
KiCad E.D.A. 10.0.1
Id: 2/4

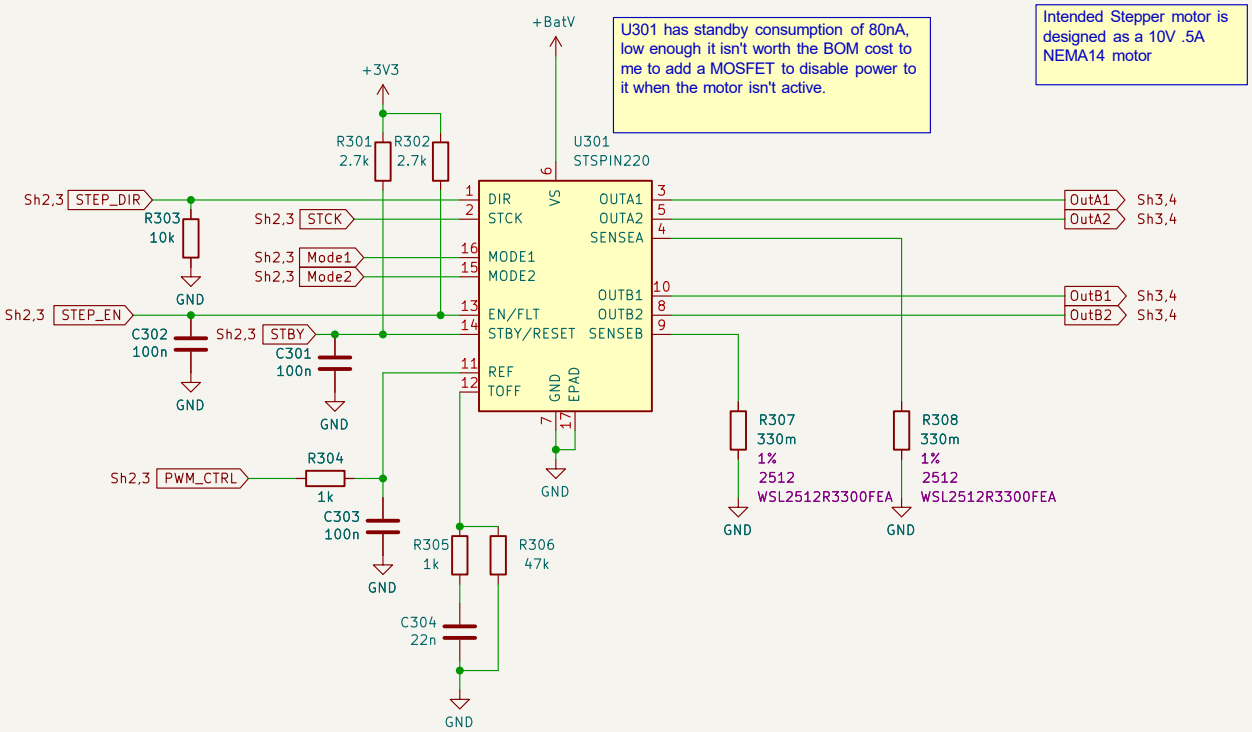

Alec Ross

Sheet: /Stepper Motor Driver/

File: Stepper Motor.kicad_sch

Title: Stepper Motor Controller

Size: A4	Date: 2026-04-21	Rev: AA
KiCad E.D.A. 10.0.1		Id: 3/4

USB

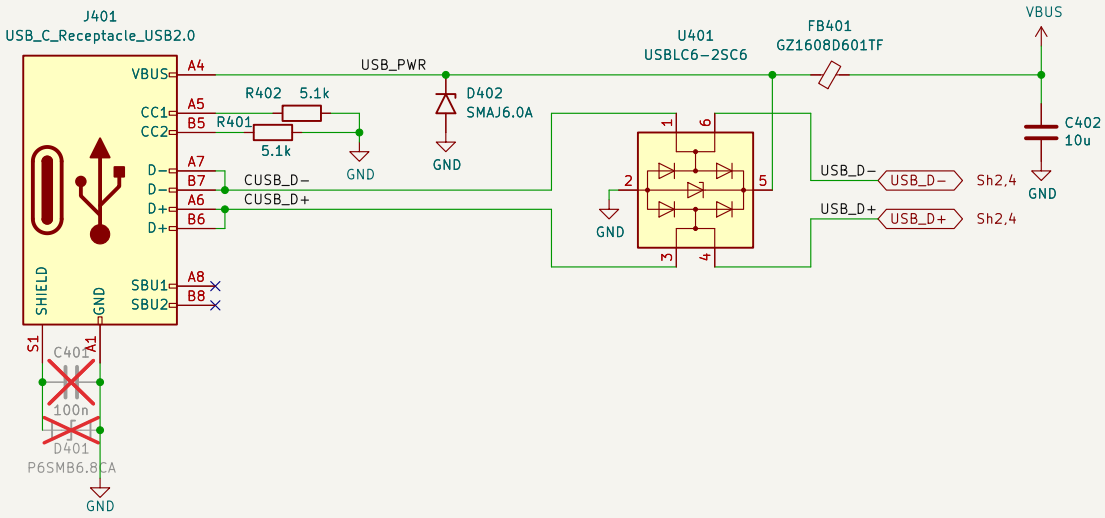

Motor Ouput

This is a phoenix connector terminal block, vibration could be an issue,
but this is for easy wiring for a demo

Battery Input

The intended battery is a 2S battery
Vmax = 8.4V
Vmin = 3.3V (power to the CPU will shut off under 3.3V)

D405 is for reverse polarity protection

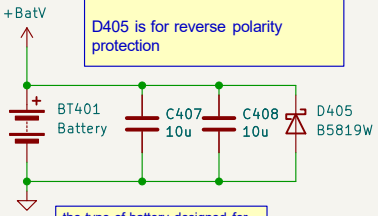

the type of battery designed for is terminated 2S1P battery such as this one

3.3V power and input ORing

CONTROL (EN, PG)						
V_{EN_H}	High level input threshold voltage (EN)		0.9	0.6		V
V_{EN_L}	Low level input threshold voltage (EN)			0.56	0.3	V
I_{LKG_EN}	Input leakage current (EN)	EN = V_{IN} or GND		0.01	1	µA

Vmin = 5V
Vtypical = 6.6V
Vmax = 8.4V

minimum enable = 3.3V
typical enable = 6.2V

U403 is a diode OR controller, to manage whether the battery or the USB power is providing power for the U402 3.3V converter

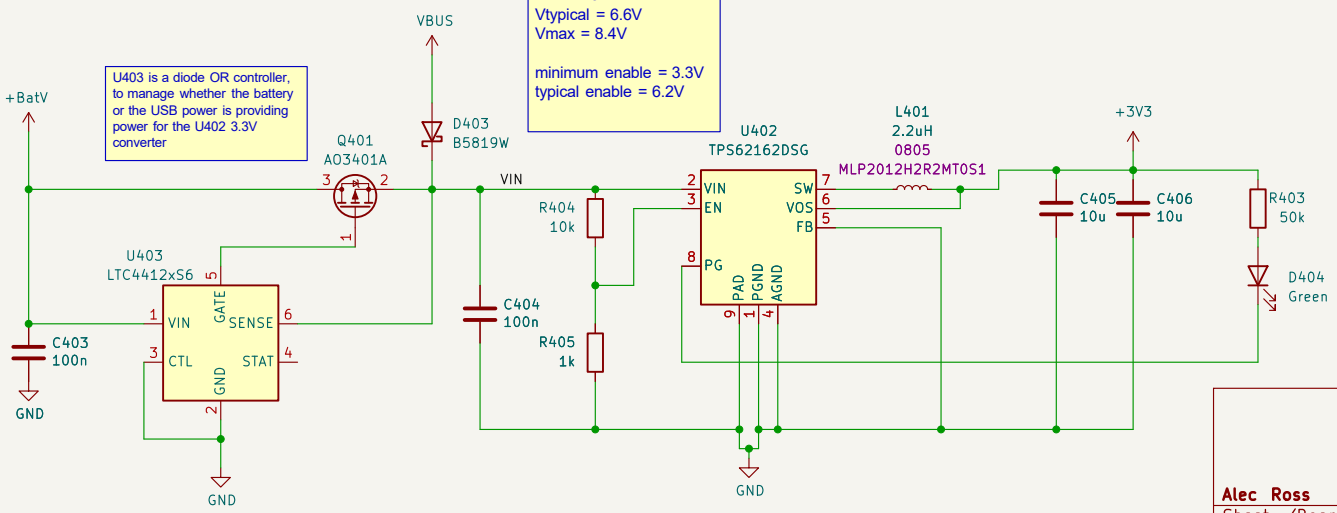

Alec Ross

Sheet: /Board Connectors/
File: Connectors.kicad_sch

Title: Stepper Motor Controller

Size: A4	Date: 2026−04−21	Rev: AA
KiCad E.D.A. 10.0.1		Id: 4/4