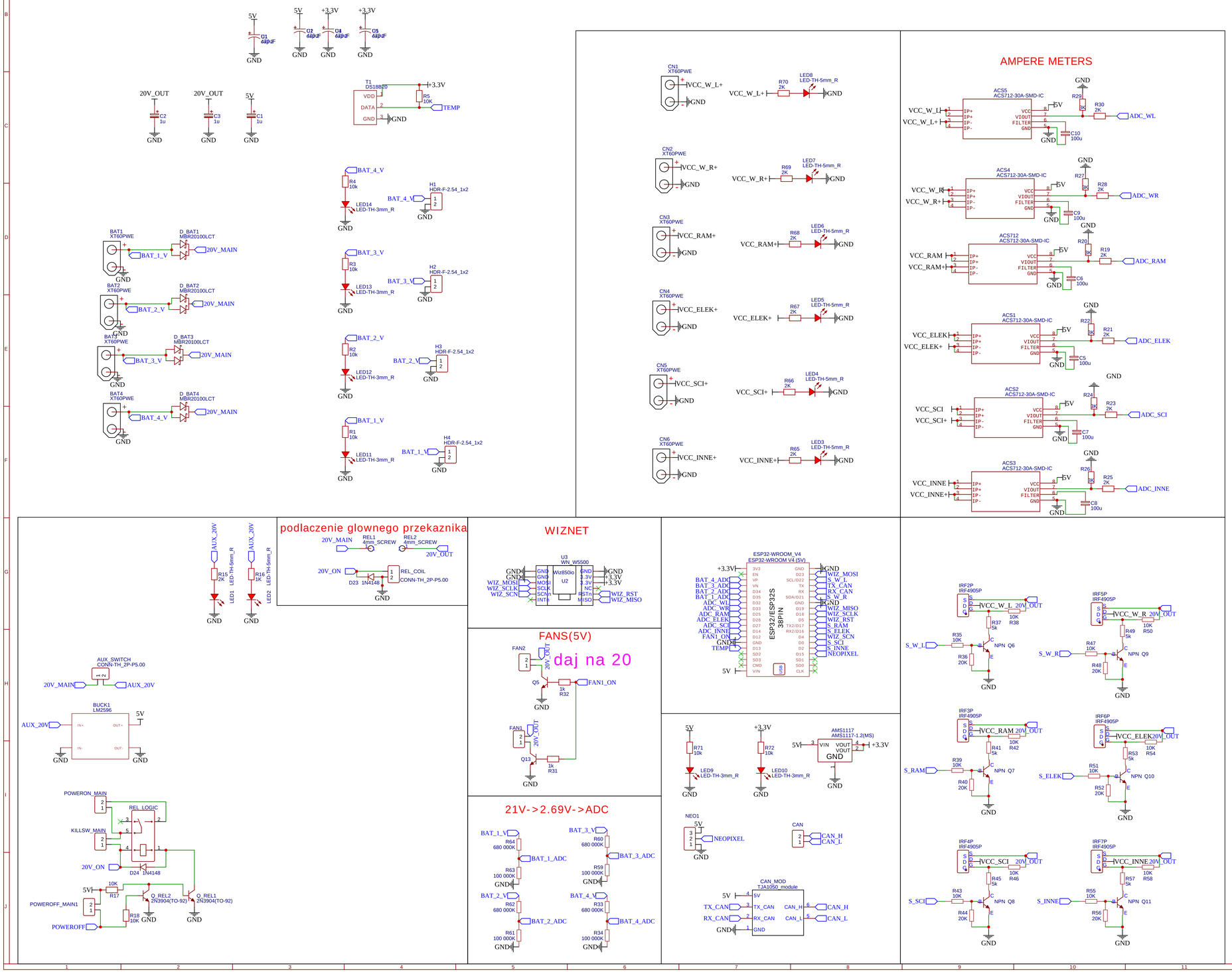
AMPERE METERS
WIZNET
podlaczenie glownego przekaznika
FANS(5V)
daj na 20
21V->2.69V->ADC
ESP32-WROOM_V4
ESP32/ESP32S
38PIN
ACS5
ACS4
ACS712
ACS1
ACS2
ACS3
ACS712-30A-SMD-IC
ADC_WL
ADC_WR
ADC_RAM
ADC_ELEK
ADC_SCI
ADC_INNE
TEMP
20V_MAIN
20V_OUT
AUX_20V
BUCK1
LM2596
POWEROFF_MAIN1
POWEROFF
NEOPIXEL
CAN_H
CAN_L
CAN_MOD
TJA1050_module
AMS1117
AMS1117-1.2(MS)
W5500
Wiz850io
REL_LOGIC
REL_COIL
CONN-TH_2P-P5.00
AUX_SWITCH
D_BAT1
D_BAT2
D_BAT3
D_BAT4
MBR20100LCT
XT60PWE
LED-TH-3mm_R
LED-TH-5mm_R
HDR-F-2.54_1x2
IRF4905P
IRF2P
IRF3P
IRF4P
IRF5P
IRF6P
IRF7P
NPN Q6
NPN Q7
NPN Q8
NPN Q9
NPN Q10
NPN Q11
Q_REL1
Q_REL2
2N3904(TO-92)
1N4148
GND
5V
+3.3V
20V_OUT
20V_MAIN
AUX_20V
TEMP
BAT_1_V
BAT_2_V
BAT_3_V
BAT_4_V
BAT_1_ADC
BAT_2_ADC
BAT_3_ADC
BAT_4_ADC
FAN1_ON
FAN2
VCC_W_L+
VCC_W_R+
VCC_RAM+
VCC_ELEK+
VCC_SCI+
VCC_INNE+
S_W_L
S_W_R
S_RAM
S_ELEK
S_SCI
S_INNE
WIZ_MOSI
WIZ_SCLK
WIZ_SCN
WIZ_RST
WIZ_MISO
TX_CAN
RX_CAN
NEOPIXEL
CAN_H
CAN_L
TITLE:
V2026
REV: 1.0
Company: Your Company
Sheet: 1/1
Date: 2026-01-22
Drawn By: tongpu
EasyEDA