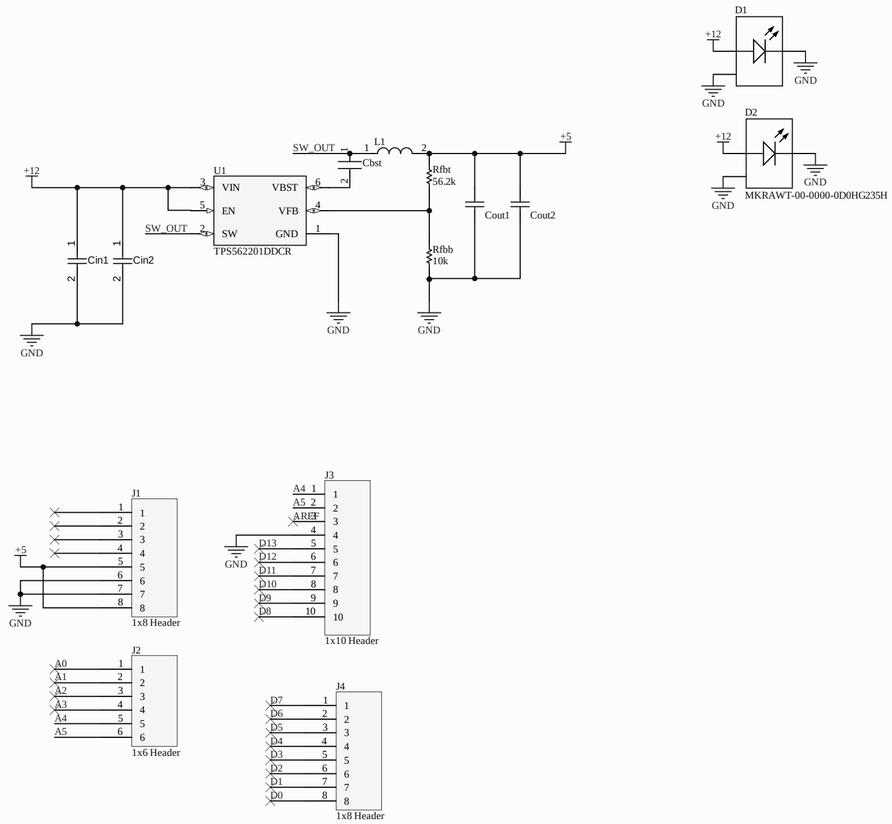

Title		
Power Regulator + LED Shield PCB for Arduino UNO		
Size: A2	Number: Drawing #0001	Revision: A
Date: 3-02-2024		Sheet of
File: C:\Users\..\Sheet1.SchDoc		Drawn By: Atif Islam