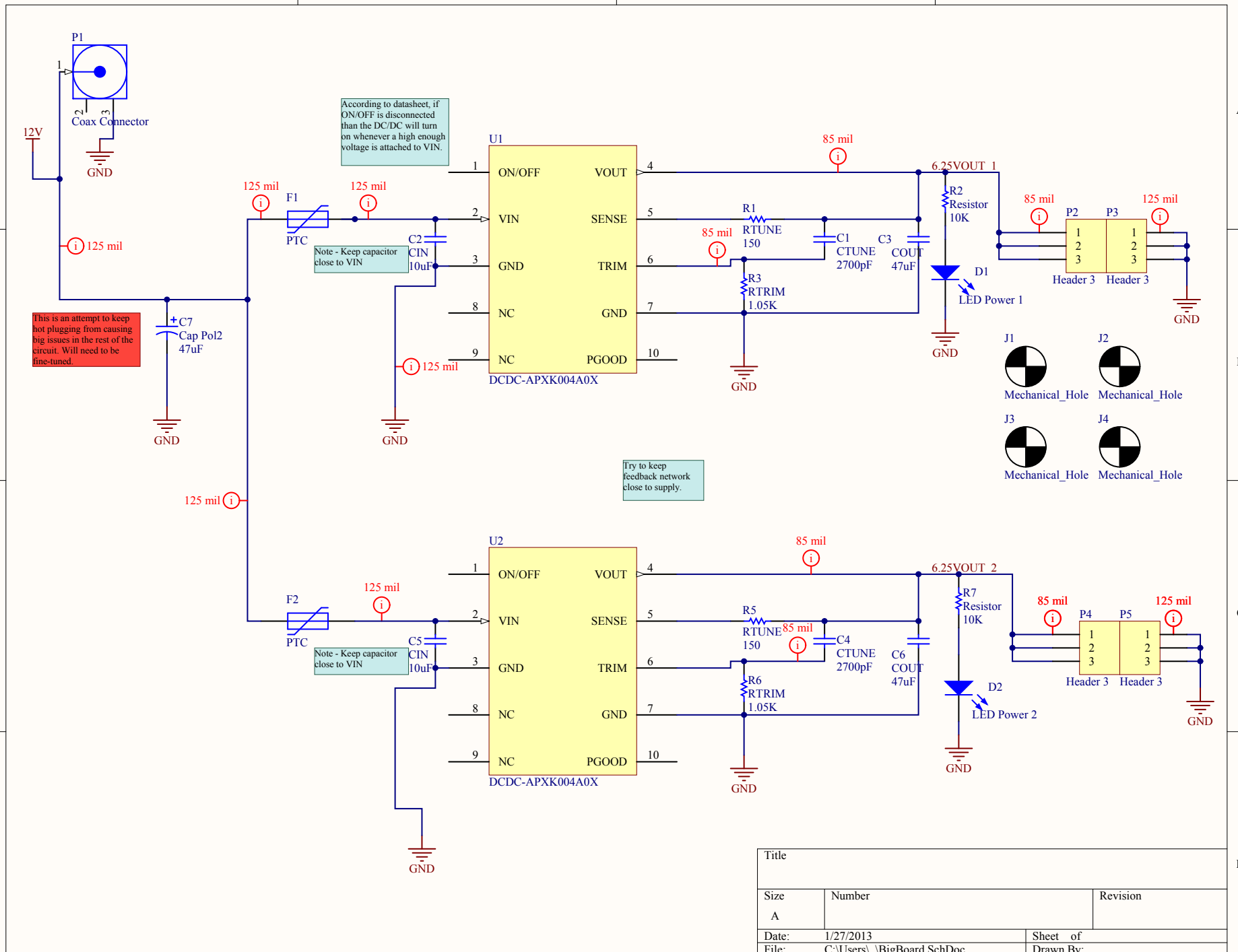

Title		
Size A	Number	Revision
Date: 1/27/2013		Sheet of
File: C:\Users\..\BigBoard.SchDoc		Drawn By:

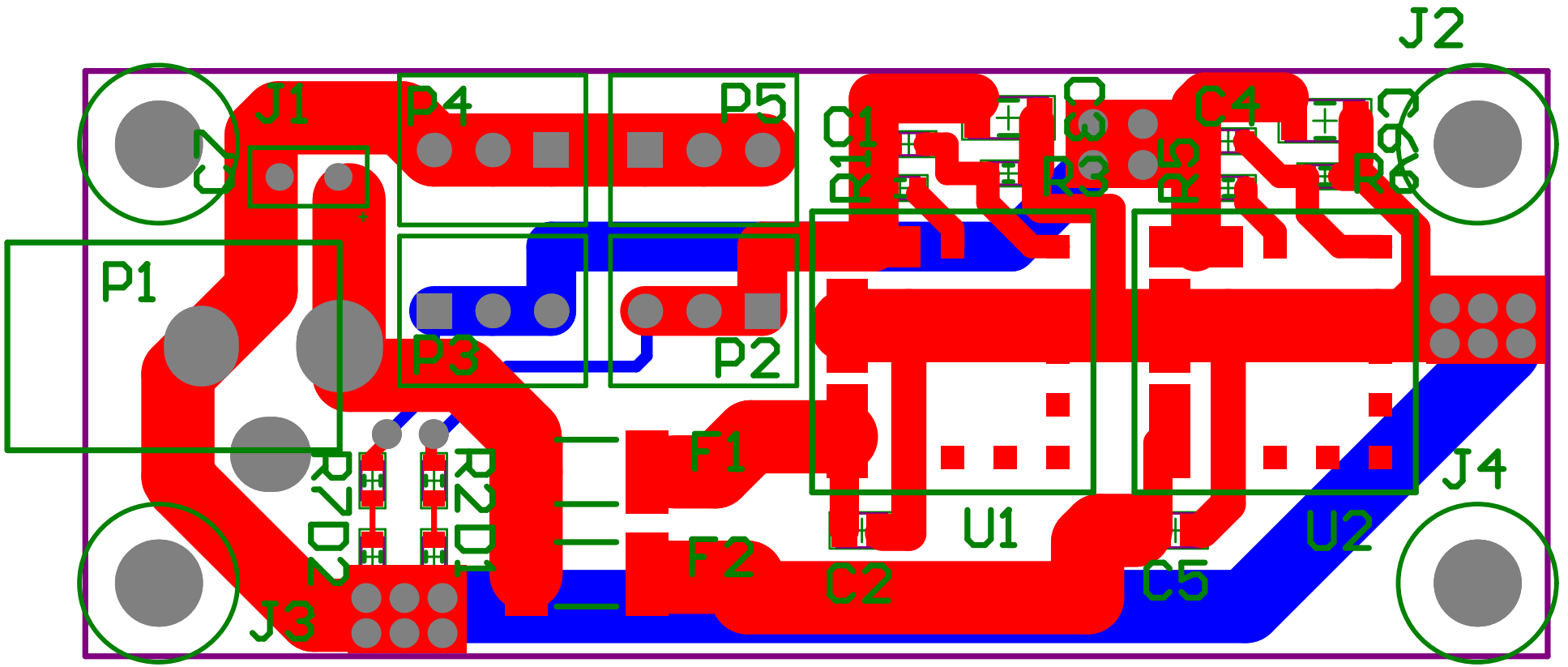
J2
J1
P4
P5
C1
C3
C4
C6
R1
R3
R5
R6
P1
P3
P2
F1
F2
R4
D2
R2
D1
J4
U1
U2
C2
C5
J3