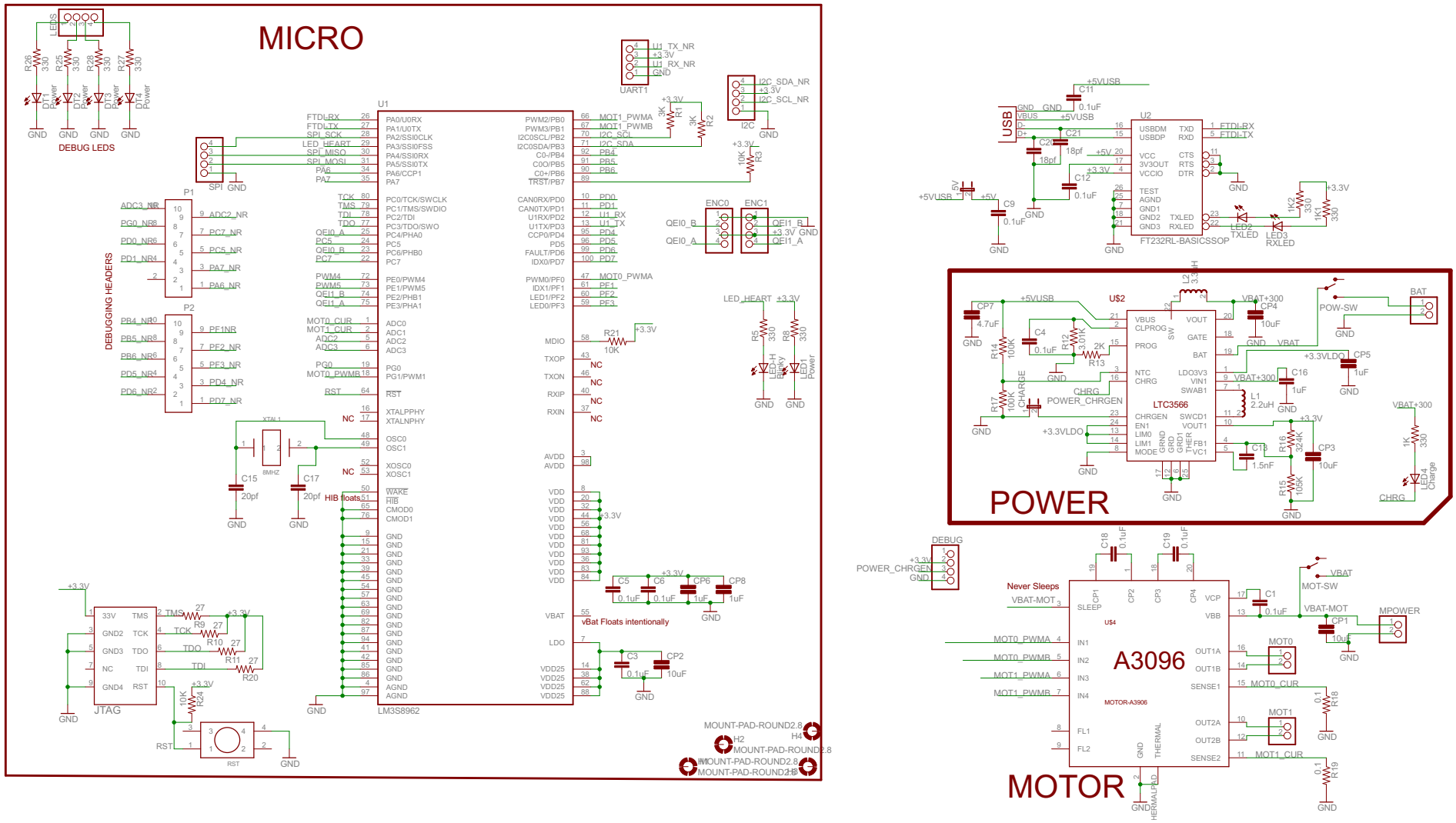

6/11/2010 4:28:09 PM f=0.60 C:\svn\mrone\elec\EAGLE\mrone\mrone.sch (Sheet: 1/1)