RS104 Quick Installation Guide

RS104 快速安装指导

Contents

目录

Preparing for your Atlantium System Installation 5

安特蓝德系统安装准备工作 5

Access 11

进场 11

Hydraulics 11

水力方面 11

Control 12

控制 12

Application 12

应用 12

Electricity 13

电气 13

Electrical Requirements 13

电气要求 13

Electrical Usage 13

电气使用 13

Typical RZ104 System Cabling Diagram 15

典型 RZ104 系统布线图 15

Power Consumption & Local Voltage Requirements 16

功耗和当地电压要求 16

Atlantium Technologies Ltd. /安特蓝德公司

地址：上海市肇嘉浜路 376 号轻工大厦 510 室 200031，电话: +86 21 54665686，传真: +86 (21) 5466 0450

www.atlantium.cn，sales@atlantium.com

RS104 Series 16
RS104 系列 16
The Piping Infrastructure 16
管道设施 16
Flow Measurement/Detection 17
流量测量/检测 17
Sampling Valve Components and Kits 19
取样阀组件和套件 19
Draining Valves 21
排水阀 21
CIP Ports and CIP Kits 21
CIP 口和 CIP 套件 21
Connection to Facility Control 24
连接厂区控制系统 24
Installing the Atlantium System 24
安装安特蓝德系统 24
Installation Process Flow Diagram 25
安装流程图： 25
Setting the Main Circuit Breakers to OFF Position 26
关断主断路器到 OFF 位置 26
Positioning the Atlantium Unit 26
安特蓝德设备就位 26
Required Equipment 27
需要用到的设备 27
Installing Sampling Points and CIP/Draining Ports 28
安装取样口和 CIP 口/排水口 28
Installing the Inlet/Outlet Sampling Points 28
安装进/出取样口 28
Installing the CIP/Draining Ports 30
安装 CIP 口/排水口 30

Installing the Electrical Cabinet 33
安装电气柜 33
Cabling Inside the Electrical Cabinet 35
电气柜内布线 35
Controller Connections 37
连接控制屏 37
External On/Off - Additional Notes 40
远程开/关-附加说明 40
Connecting the Main Power Cable 41
连接主电源线 41
Installation Check List 42
安装检查清单 42
First Time System Activation 44
系统激活 44
Cleaning In Place (CIP) 45
现场清洗(CIP) 45
Selecting the Correct Chemicals for CIP 45
为 CIP 选择正确的化学品 45
Preparing the Chemical Solution 47
制备化学溶液 47
Introducing Water for the First Time 49
第一次通水 49
Igniting the Lamps for the First Time 50
第一次启动灯管 50
Initiating the Water Flow 51
初始化流量设置 51
System Tuning 52
系统校准 52
Adjusting the Auxiliary Equipment 52
调节辅助设备 52

Basic Operations 52
基本操作 52
Starting up the Atlantium System 52
启动安特蓝德系统 52
Shutting Down the Atlantium System 53
关闭安特蓝德系统 53
Taking Microbial Samples 54
微生物取样 54
Safety Overview 56
安全概述 56
UV Lamp Safety 57
UV 灯管的安全信息 57
Electrical Hazards and Safety Considerations 60
电气危险和安全考虑 60
Keep the Unit Full of Water 61
保持设备中充满水 61
Chemical Use for Cleaning in Place (CIP) 62
现场清洗（CIP）的化学药品使用 62
System Safety Features 62
系统安全特征 62
UV Protective Seal 62
UV 防护密封 62
Lamp On/Off Switch 63
灯管开/关 63
Software Safety Controls 63
软件安全控制程序 63
Atlantium Training 64
安特蓝德培训 64

Preparing for your Atlantium System Installation

安特蓝德系统安装准备工作

Consider where to locate the unit from the perspective of your process. Prepare your installation plan according to the planning points below, as well as the other guidelines in the Atlantium User Manual.
从你的工艺流程来考虑这个设备的安装位置。根据下面的规划要点以及《安特蓝德用户手册》中的指导来准备您的安装方案。

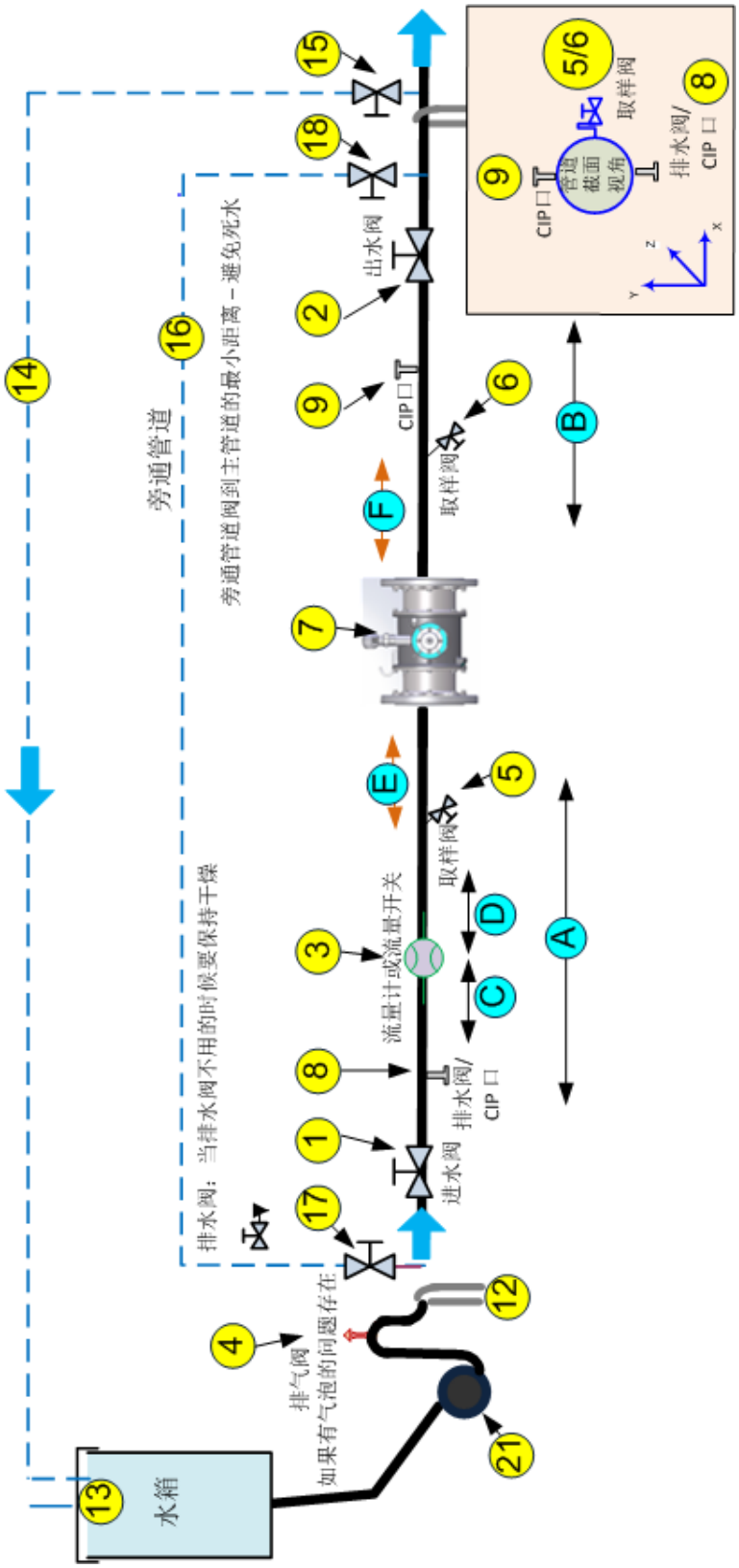

Figure 1: Typical **RS104** System Setup
图1：典型**RS104**系统安装

Table 1: Typical Atlantium System Component Setup Key

表1：典型RS104系统安装辅件

#	Description 描述
➡	Direction of water flow in the pipes 管路中水流方向
1	Inlet isolation Valve 进水隔离阀 ■ Isolating Valve on the Inlet side 进水端的隔离阀
2	Outlet isolation Valve 出水隔离阀 ■ Isolating Valve on the Outlet side 出水端的隔离阀
3	■ Flow Meter flow measurement device with 4-20mA analogue output signal 流量计流量测量设备，输出4-20mA模拟信号 ■ To be installed on the same line as the Atlantium system, with no branching before or after the flow meter 流量计安装在安特蓝德系统的同一管路上，流量计前后都没有分支 ■ Follow the manufacturer's Installation instructions 遵循厂家安装指导
4	Air Release valve - To prevent air bubbles where necessary 排气阀 - 防止水中可能的气泡 ■ Automatic Air Release valve is used to release air bubbles trapped within the line 自动排气阀用来释放管路中的气泡 ■ Install at a high position to allow air bubbles to accumulate and release from this point 安装在管路高点位置让累积的气泡从此处释放
5/6	Inlet/Outlet Sampling Points 进口/出口取样点 ■ Aseptic sampling valves are to be positioned **horizontally** (90^0) on the pipe center, within 50cm of the Unit 无菌取样阀**水平**(90^0)安装在管道中心，离设备50cm的范围以内 ■ Aseptic sampling valve must be a dedicated valve for sampling only and resistant to alcohol and flame 无菌取样阀须专用于取样，须能够耐酒精和火焰
7	Generic Atlantium Unit (shown with flange interface. Systems are also supplied with ferrule interface. 安特蓝德设备（图示的是法兰接口，系统也可以配卡箍接口）

Table 1: Typical Atlantium System Component Setup Key

表1：典型RS104系统安装辅件

#	Description 描述
8	Draining/CIP Port - For performing CIP on the Atlantium Unit 排水口/CIP口 - 用于安特蓝德设备的CIP ■ The Draining port are to be positioned close to the Inlet valve and between that and the Unit, ***on the bottom*** of the pipe 排水口应靠近进水阀，位于进水阀与设备之间，安装在管道***下侧*** ■ It is also used as one of the CIP ports and connects to a hose 它也可以用作CIP口连接软
9	CIP Port - For performing CIP on the Atlantium Unit CIP口 – 用于安特蓝德设备的CIP ■ The CIP port are to be positioned between the Unit and the Outlet valve, ***on top*** of the pipe, at the ***highest*** point before the isolation valve, in order to allow the pipes to be completely filled with solution CIP口安装在设备与出水阀之间，隔离阀之前***最高***点管路的***上侧***，目的是让管道完全充满溶液
10	System Supports 系统支撑结构 ■ Supports are required to assure no mechanical stress on the Atlantium Unit 支承结构需能够保证安特蓝德装置不承受机械应力
11	Support brackets 支架 ■ Brackets are used to hold the Atlantium Unit and pipes attached to the support mounts 支架用于固定安特蓝德设备及配套管道 ■ Is to include internal flexible material to absorb vibrations and assure that the pipes and Atlantium Unit are mounted tightly and securely 包含内置柔性材料，以便吸收振动并保证各管道及安特蓝德设备牢固性和安全性
12	Pipe Supports 管道支撑 ■ Pipe Supports are required to assure no vibrations in the pipeline 管道支撑需能够确保管道中无振动
13	Water tank 水箱
14	Recirculation Line >5m3/h (>20gpm (Optional) 循环管路>5m3/h (>20gpm (可选) ■ A Recirculation line is highly recommended to keep water flowing constantly, thereby assure a high disinfection level 强烈建议安装循环管线，以保持水流的持续性，从而确保较高的消毒水平

Table 1: Typical Atlantium System Component Setup Key

表1：典型RS104系统安装辅件

#	Description 描述
15	Recirculation Line Isolation valve (Optional) 循环管路隔离阀（可选）
16	By-Pass (Optional) 旁通管道（可选） ■ If the facility uses quartz corrosive CIP chemicals, such as caustic soda, use a By-Pass line to prevent damage to the Atlantium Unit 如果工厂用腐蚀石英的化学品做CIP，比如烧碱，使用旁通管线可防止对安特蓝德设备的损害
17	By-Pass Inlet isolation Valve (Optional) 旁通管道进口隔离阀（可选）
18	By-Pass Outlet isolation Valve (Optional) 旁通管道出口隔离阀（可选）
19	By-pass draining port (Optional) 旁通管道排水口（可选） ■ The Draining port are to be positioned on the bypass line, at the lowest point of the pipe 排水口应安装在旁通管道的最低点
20	Drain 排水口 ■ It is recommended to install a drain close to the draining valve 建议在排水阀附近安装排水口
21	Pump 泵 ■ To prevent water hammer, the pump must be able to start up gradually. 为防止水锤，泵必须能缓慢启动

Table 2: Typical Atlantium System Distances Setup Key

表2：典型安特蓝德辅件的安装距离

#	Description
A	Minimum 10D (**RZ104**: 1000mm/40” **RZ163**: 1500mm/64” **RZ300**: 3000mm/ 118”) of straight horizontal pipe between the Inlet isolation valve and the Atlantium Unit (For sites with space constraints, consult an Atlantium Application Engineer to find appropriate solutions.) 进水隔离阀与安特蓝德设备之间的水平直管最短10D（**RZ104**:1000mm/40” **RZ163**: 1500mm/64” **RZ300**: 3000mm/ 118”）（如果空间有限制，请向安特蓝德应用工程师咨询解决方案。）
B	Minimum 5D (**RZ104**: 500mm/20” **RZ163**: 750mm/32” **RZ300**: 1500mm/.59”) of straight horizontal pipe between the Atlantium Unit and the Outlet isolation valve (For sites with space constraints, consult an Atlantium Application Engineer to find appropriate solutions.) 安特蓝德设备与出水隔离阀之间的水平直管最短为5D（**RZ104**:500mm/20” **RZ163**: 750mm/32” **RZ300**: 1500mm/.59”）（如果空间有限制，请向安特蓝德应用工程师咨询解决方案。）
C	Position the Flow Meter or Flow Switch typically requires a minimum 5D (**RZ104**: 500mm/20” **RZ163**: 750mm/32” **RZ300**: 1500mm/.59”) of straight horizontal pipe immediately preceding it on the Inlet side. Refer to the manufacturer’s instructions. 进水口侧流量计或流量开关前的水平直管最短为5D（**RZ104**:500mm/20” **RZ163**: 750mm/32” **RZ300**: 1500mm/.59”）的水平直管。参照制造商的说明。
D	Position the Flow Meter or Flow Switch typically requires a minimum 2D (**RZ104**: 500mm/20” **RZ163**: 750mm/32” **RZ300**: 1500mm/.59”) of straight horizontal pipe immediately following it before the Atlantium Unit. Refer to the manufacturer’s instructions. 流量计或流量开关后到安特蓝德设备的水平直管最短为2D（**RZ104**:500mm/20” **RZ163**: 750mm/32” **RZ300**: 1500mm/.59”）。 参照制造商的说明。
E	Position the Inlet Sampling Point Maximum Distance from the Atlantium System Inlet 0 .5 meters/1.5ft. 进口取样点到安特蓝德系统入口的最大距离0.5米/1.5英尺。
F	Position the Outlet Sampling Point Maximum Distance from the Atlantium System Outlet 0.5 meters/1.5ft. 出口取样点到安特蓝德系统出口的最大距离0.5米/1.5英尺。

Access

进场

Premises Access

进场前提

Take into account that sufficient door space is required to transport the Atlantium Unit into the facility where it is to be placed.

考虑门有充足的空间，以便将安特蓝德设备能运进厂区内的安装场地。

Service Access

维护空间

Take into consideration that sufficient space is required for maintenance personal to access the Atlantium Unit for periodic component replacement.

考虑为维护人员对安特蓝德设备进行周期性组件更换预留足够的空间。

Hydraulics

水力方面

Piping

管路

Align the upstream and downstream piping with the designated location for the Atlantium Unit.

将上、下游管道与安特蓝德设备的指定位置对齐。

Prepare the flanges/ferrules and piping as specified according to ***The*** Piping Infrastructure on page 16. To avoid a step in the connection, make sure that the internal diameters where the Atlantium Unit and your piping match.

根据第16页***管道设施***准备法兰/卡箍和管道。避免接口处出现台阶式接头，确保安特蓝德装置内径与贵方管道内径相匹配。

Do not use sealing material that contains graphite when sealing the flanges/ferrules and gaskets as it accelerates the corrosive process on stainless-steel components, including those of the Atlantium system.

密封法兰/卡箍及垫圈时不要使用含石墨的密封材料，因为这类材料会加速包括安特蓝德系统组件在内的不锈钢组件的腐蚀。

Be sure to position adequate supports on the piping line needed to hold up and stabilize the process piping on the inlet and outlet side of the proposed location of the Atlantium unit.

确保在管道上安装充足的支撑，以便充分支撑并稳定安特蓝德设备安装位置上进口与出口侧的工艺管道。

Determination of support requirements and design are to be made by an on-site mechanical engineer.

支撑的要求和设计由现场机械工程师确定。

Mechanics

机械

Prepare the supports needed for the Atlantium Unit, noting the minimum level above the floor is at least 750mm /29.5 inch. For RS104 systems, between the floor and the bottom of the provided triangle support brackets.

准备安特蓝德设备的支架，注意离地面高度至少750毫米/ 29.5英寸。对于RS104系统，是地面到三角支架底部之间的高度。

Check that the piping on the inlet and outlet sides has adequate supports so that there are no mechanical stresses that may endanger the Unit.

检查并确定进口与出口侧的管线配有充足的支撑，确保不存在可能危及设备的机械应力。

Check the upstream and downstream piping for vibrations. Make sure that the piping to be attached to the Atlantium Unit is reinforced to protect the Unit against vibration. A high vibration level can cause damage to any hydraulic system, including the Atlantium unit. High vibration can be caused by an unbalanced pump or by sudden valve close.

检查上、下游管线的振动情况。加固安特蓝德设备的配套管道，确保其能保护设备免受振动损害。较大的振动可能损害流体系统，包括安特蓝德设备。泵的不平衡或阀门的突然关闭都可能造成较大的振动。

Hydrodynamics

流体动力

Water hammer can cause damage to any hydraulic system, including the Atlantium Unit. Make sure that this phenomenon does not occur in your facility's water line. To prevent water hammer, consult your system engineer and check your facility system procedures, including:

水锤现象可能损害流体系统，包括安特蓝德设备。确保这一现象不会发生在贵方的管道中。关于如何预防水锤现象，请向贵方的系统工程师咨询，并检查贵方的厂区内系统流程，确保下列各项：

When starting the water flow when the lines are empty, keep valves open so that the air in the pipes has a simple release pathway.

当管路中空的时候开始进水，保持阀门开启，使管道内的空气有一个简单的释放通道。

Sudden valve closures can cause water hammer. Make sure that valves close gradually, enough to avoid this problem.

阀门突然关闭会引起水锤。确保阀门逐渐关闭，以避免这个问题。

Ensure that all pumps that impact the Atlantium system employ soft start-up procedures.

确保所有影响安特蓝德系统的泵采用软启动。

The Atlantium Unit must be filled with water totally. Assure that any trapped air can be released and that no air can be trapped in the Unit. After installing and operating the unit you can verify this through the viewport.

安特蓝德设备必须完全充满水。确保释放所有滞留空气被排放出，没有空气滞留在设备内。安装完成后运行时可通过观察窗观察是否有空气。

Control

控制

Evaluate your flow trends to determine whether you require a flow meter or flow switch. If the flow varies, a **flow meter** is required to detect and report on the flow coming into the unit. Make sure that there are to be **no** branches on or off the pipes between the flow meter and the Unit inlet. If the flow rate is static, a **flow switch** can be used instead.

估计贵方的流量趋势，以确定需要安装流量计或是流量开关。如果流量波动，要求安装**流量计**，以便检测并报告进入设备的流量。确保在流量计到设备入口之间的管道上下没有分支。如果流量是稳定的，也可以安装**流量开关**。

Application

应用

Verify that the dose-related parameters, such as the UVT and the flow, are the same as those defined in the Atlantium application scope of supply.

确认与剂量相关的参数，如UVT和流量，是在安特蓝德设备应用范围内的。

Determine what a low flow situation means to your process and whether you need to shut down the Unit (low flow indicates upstream problems) or recirculate (low flow normal) when the flow goes below the normal range.

确定低流量的情况，当流量低于正常范围你需要关闭设备（低流量表示上游有问题）或是循环（低流量是正常）。

Electricity

电气

Evaluate the quality of your power and the likelihood of blackout/brownouts, electrical surges or interruptions may be to determine if you need power surge protection and or uninterrupted power supply if any.
评估贵方电力的质量和限电/停电的可能性，如果有任何电涌或断电，您需要加装浪涌保护器或不间断电源。
For systems utilizing saltwater, minimize the corrosion potential of the treated water by ensuring that there is sufficient grounding.
对于应用于盐水的系统，确保有充分的接地以最大限度地减少盐水的腐蚀。
To verify that you order the correct lengths for cables (i.e., Cable Harness, power cables, data cable, etc.), measure the distance between the proposed location of the relevant Atlantium components and between them and the Power source.
确认贵方订购的电缆（电缆束、电力线、数据线等）长度适中，测量相关安特蓝德部件之间及部件到电源之间的距离。
Prepare cables of sufficient length to connect from the auxiliary equipment (i.e., the flow meter/flow switch, etc.) to the Atlantium system.
准备足够长的电缆从辅助设备（流量计/流量开关等）连接到安特蓝德系统。
For systems utilizing saltwater, the Atlantium Unit must be grounded. Be sure to prepare a ground point next to the designated location for the Atlantium Unit.
应用于盐水的系统，安特蓝德设备必须接地。确保安特蓝德系统指定安装位置有接地点。

Electrical Requirements

电气要求

The electrical infrastructure are to be installed and in place prior to the system's delivery. Take into account:
电气基础设施应在系统送达前安装完毕。此项工作应考虑以下几点：
Planning the placement of the Ballast Modules, Controller and the path of the various cables must take into consideration the length of the Cable Harness and the other cables. Cables must be placed in a path that does not interfere with passage ways.
镇流器模块、控制屏及不同电缆路径的设计安装须考虑电缆束及其他电线的长度。电缆布置在不对各个通道造成干扰的位置上。
The power mains connections must be in the vicinity of the Ballast Modules, Controller.
主电源必须是在镇流器、控制屏附近。
The power cable and connecting plug are to be obtained locally.
电源线和连接插头都可以在当地购买。

If your region experiences periodic power outages, consider including uninterrupted surge protection devices.
如果贵方的地区经常停电，考虑加装不间断浪涌保护装置。

Electrical Usage

电气使用

Utilize a Residual Current Device (RCD) that is Type A with 3000A surge resistance. For **RZ163-24** systems, utilize an RCD for each unit.
每套系统使用一个3000A浪涌电阻的Type A电流式漏电断路器（RCD）。例如**RZ163-24**系统，使用2个RCD。

Atlantium recommends ABB P/N F204 A-xx/0.03 AP-R (xx represents the current rating according to the system load). Select the appropriate RCD accordingly. Calculate the value, taking into account the power consumption of the system (see the table in the section below) and the mains voltage of your locale.

安特蓝德建议ABB P/N F204 A-xx/0.03 AP-R（XX代表根据系统负载的额定电流）。选择合适的RCD。计算该值时，需要考虑系统的功耗（见下表）和现场电源电压。

Table 3: Atlantium Unit Electrical Usage

表3：安特蓝德设备的电气使用

Electrical	Details
Phase: 相位 Voltage: 电压 Maximum allowed voltage tolerance: 允许最大的偏差电压	3 phase 3相 400 VAC per Ballast Module 每个整流器400 VAC ±10% from the nominal voltage 额定电压的±10%以内

Typical RZ104 System Cabling Diagram

典型RZ104系统布线图

The diagrams below detail the Electrical Cabinet wiring.

下图是电气柜布线。

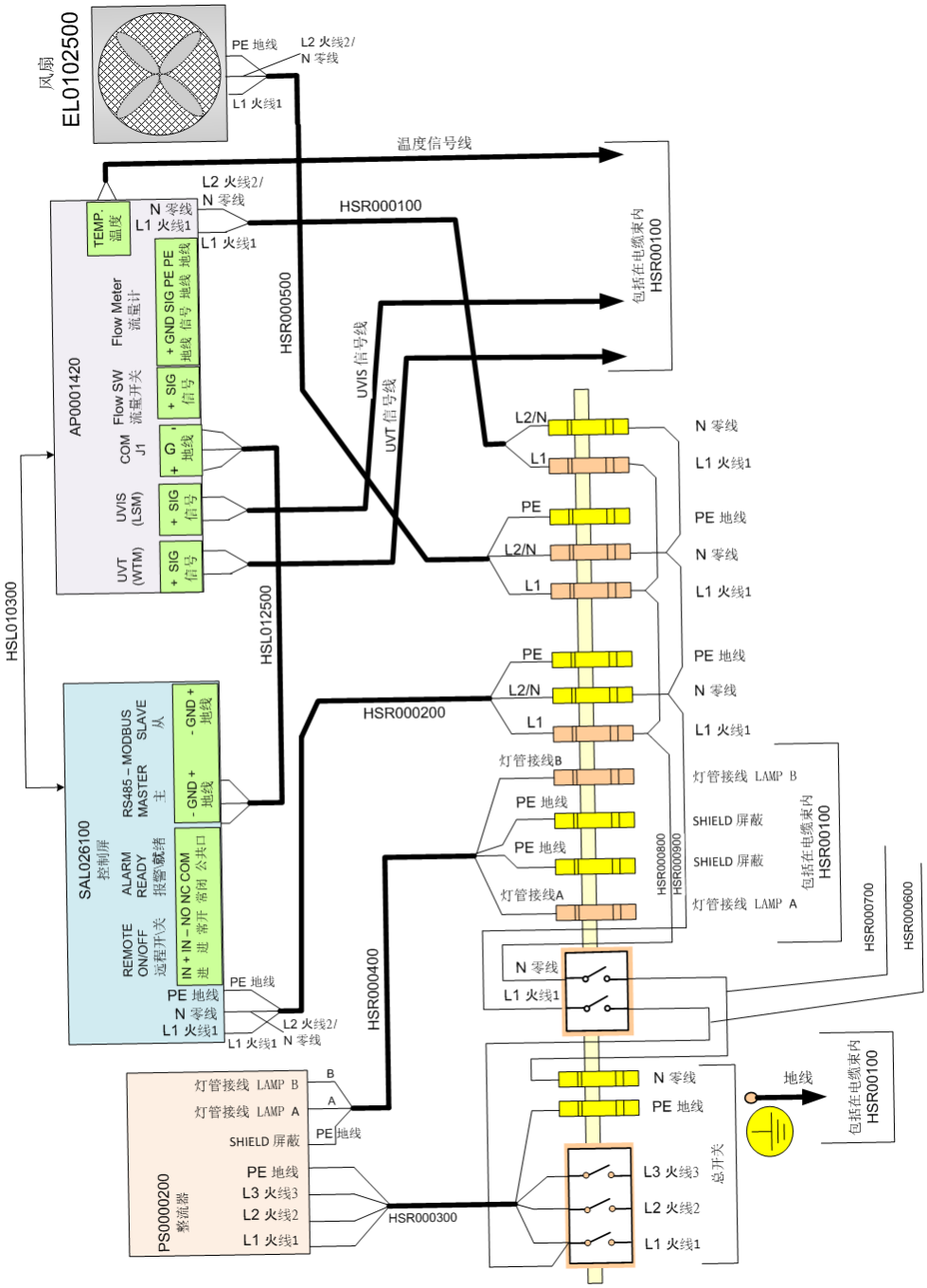

Figure 2: Electrical Cabinet Wiring for Locations with 400VAC

图2：电气柜布线，适用于400VAC供电环境

Power Consumption & Local Voltage Requirements

功耗和当地电压要求

The table below details the power consumption or the **RS104** system according to local voltage.
下表是依据当地电压的**RS104**系统功耗。

RS104 Series

RS104系列

Table 4: RS104 Power Consumption and Circuit Breakers

表4：RS104功耗和断路器

#of lamps: **灯管数**	1	
Nominal lamp power (kW): 普通灯管功率(KW):	1	
Feeding voltage (V) 进线电压(V)	Current consumption each phase (A) 电流消耗(A)	Required Circuit Breaker 断路器要求
400	1.6	3x4A

The Piping Infrastructure

管道设施

Install the piping infrastructure before the Atlantium system arrives, but to avoid built-in mechanical stresses perform the final pipe adaptations and welds when the unit is actually situated in its permanent position.
在安特蓝德系统到来之前安装好管道设施，为了避免内置的机械应力，当设备放置到它永久的实际位置才进行最后管路对接和焊缝。

- When sealing the flanges/ferrules and gaskets, **do not** use sealing material that contains graphite as it accelerates the corrosive process on stainless-steel components, including those of the Atlantium system.
  密封法兰/卡箍和垫片时，不要使用含有石墨的密封材料，因为这类材料会加速包括安特蓝德系统组件在内的不锈钢组件的腐蚀。
- Be sure to align the piping on the inlet and outlet sides of the designated location for the Atlantium Unit with the unit to avoid mechanical stress on the Unit.
  确保安特蓝德设备指定位置上入口和出口侧的管道与设备对齐，以避免对设备产生机械应力。
- Be sure to secure the piping around the designated location for the Atlantium Unit so that there is no vibration.
  确保安特蓝德设备周围的管道固定，没有振动。
- Be sure to position adequate supports on the piping line needed to hold up and stabilize the process piping on the inlet and outlet side of the proposed location of the Atlantium unit.
  确保在管道上安装足够的支撑，以便充分支撑并稳固安特蓝德设备安装位置上入口与出口侧上的管道。
- Determination of support requirements and design are to be made by an on-site mechanical engineer.
  支撑的要求和设计由现场机械工程师确定。

Flow Measurement / Detection

流量测量 / 检测

The Atlantium unit requires a flow signal to calculate the dose and operate properly.
安特蓝德设备根据流量信号计算剂量并正常运行。

A flow meter is required in facilities where the flow rate is variable for any reason.
波动的流量需要用流量计。

A Flow switch can be used in facilities where the flow is at a fixed, steady rate.
固定的、稳定的流量也可以用流量开关。

The Flow meter or flow switch does not necessarily have to be installed in close proximity to the Atlantium Unit. It may be more remotely positioned, provided that it is located on the inlet side between it and the Unit and there is **no** branching or splits of the water flow.
流量计或流量开关不一定要安装在安特蓝德设备附近。它可以在更远的位置，只要位于设备的入口侧并且**没有**水流分支或分岔。

The Atlantium system cannot be operated when there is no water or no water flow. Any damage caused due to operating the system without water or without water flow invalidates the Atlantium warranty.
安特蓝德系统在没有水或没有水流时无法运行。由于安特蓝德系统在没有水或没有水流时运行造成任何损害不在保修范围内。

Flow Meter

流量计

In most cases, a flow meter with a 4-20 mA output is required to measure the flow and automatically adjust the output of the UV system. The flow meter must be able to measure the expected maximum water flow of the specified Atlantium unit. The power source for the flow meter must come from an external source according to the manufacturer's instructions.
大多数情况下，要求安装4-20mA输出量的流量计，用于测量流量及自动调节紫外线系统的输出。该流量计须能够测量到相关安特蓝德设备的预期最大水流量。根据制造商说明，流量计电源应为外部电源。

Be sure to provide the power source for the flow meter as part of the preparations for installing the Atlantium Unit.
为流量计提供工作电源是安装安特蓝德设备准备工作的一部分。

Install the flow meter in strict accordance with the instructions supplied by its manufacturer.
严格按照制造商提供的说明安装流量计。

Flow meters similar to the following are available from Atlantium:
以下系列的流量计可从安特蓝德购买：

KROHNE OPTIFLUX 6000 flow meter for high-purity water applications

科隆 OPTIFLUX 6000 流量计，用于高纯度的水

KROHNE **OPTIFLUX 2300** flow meter – OPTIFLUX 2000 flow meter, includes

KROHNE IFC 300 signal converter

科隆 **OPTIFLUX 2300** 流量计 – OPTIFLUX 2000流量计，包括科隆 **IFC 300** 信号转换器

For more information, contact Atlantium Support.

如需了解更多信息，请联系安特蓝德技术支持

Figure 3: KROHNE OPTIFLUX Flow Meters
图3：KROHNE OPTIFLUX流量计

Flow Switch

流量开关

The flow switch tells the Atlantium Unit when water is or is not flowing. The recommended flow switch is Dry Contact with minimum flow sensing of 0.2m^3/hr (1gpm).

流量开关告诉安特蓝德设备水处于流动或不流动。建议安装干接点式，其最小流量感应能力应为0.2m3/hr (1gpm)。

Install it in a vertical (12:00 o'clock) orientation on top of the pipe. Follow the manufacturer's instructions.

把它垂直(12:00点钟方向)安装在管道上部。按照制造商的指示。

Figure 4: Flow Switch Example
图4：流量开关示例

Sampling Valve Components and Kits

取样阀组件和套件

Sampling valve kits are available from Atlantium. The table below details them.
下列取样阀可从安特蓝德购买。下表是详细说明。

One Accessory kit is required for each Sampling point.
每个套件用于一个取样点

Table 5: Sampling Valve Components and Kits

表5：取样阀组件和套件

Description 描述	Image 图片	Catalog number 部件号	Kit for Stainless Steel Pipe KTB005700 用于不锈钢管	Kit for Plastic Pipe KTB0011500 用于塑料管
Long welding ferrule – for welding the tri-clamp port to the pipe **长焊接套管** - 用于将卡箍接头焊接在管道上		FAC003700	X	-
Threaded Male Adapter 1/2" BSP – for connecting the tri clamp port to the plastic pipe **公螺纹接头1/2" BSP –** 用于卡箍接头和塑料管的连接		FAB008100	-	X
Aseptic sampling valve **无菌取样阀**		COB000500	X	X
Gasket 1" – for sealing the valve connected to the pipe **垫圈1" –** 用于阀和管道的密封		FA0000046	X	X

Table 5: Sampling Valve Components and Kits

表5：取样阀组件和套件

Description 描述	Image 图片	Catalog number 部件号	Kit for Stainless Steel Pipe KTB005700 用于不锈钢管	Kit for Plastic Pipe KTB0011500 用于塑料管
Clamp 1.5" – for connecting the valve to the welded port **卡箍夹1.5" –** 用于阀和焊接头的连接		FA0000045	X	X
Gasket 1/2” – for sealing the valve's flushing port **垫圈1/2” –** 用于阀的冲洗口密封		FA0000048	X	X
Clamp 1/2” – for sealing the flushing port of the valve **卡箍夹1/2” –** 用于阀的冲洗口密封		FA00000047	X	X
End cap 1/2” – for covering the valve's flushing port **端盖1/2” –** 用于盖冲洗口		FA0000049	X	X
Round brush – for cleaning the valve during the CIP process **圆刷 –** 用于CIP时清洁阀		FA0008300	X	X

Draining Valves

排水阀

Draining of the system is required for certain maintenance activities. Install one draining valve at the lowest point of the pipeline, before or after the Atlantium unit. If you plan to install CIP ports, one of them can serve as a draining valve. If there is a Bypass line used occasionally to bypass the Unit for CIP or other purposes, add an additional draining valve to assure that the bypass line does become a potential source of standing water. A bypass line must be drained when not in use.

为了进行一定程度的维护工作，要求系统有排水。在安特蓝德设备前或后管道的最低点安装一个排水阀。如果有安装CIP口的计划，其中一个可以作为排水阀。如果有旁通管道偶尔用作CIP旁通或其它目的，加设排水阀，以确保旁通管道不会成为的潜在死水源。旁通管道在不用时应排空。

CIP Ports and CIP Kits

CIP口和CIP套件

The CIP (Cleaning-In-Place) recirculation system is used for the periodic cleaning and sterilization process of the Atlantium unit's inner surfaces and quartz tube. The CIP Kit includes the CIP Cart with 1 water reservoir and a pump, capable of pumping up to 4 cubic meters per hour. It includes a supply hose: ID 0.75" / 19mm (5 meters / 15 feet long) and a return hose: ID 0.75" / 19mm (5 meters / 15 feet long) and pocket to hold these hoses.

CIP（现场清洗）循环系统用于进行定期清洗和消毒安特蓝德设备的内表面和石英管。CIP套件包括自带水箱和每小时4立方泵的CIP小车。它包括进水软管：ID 0.75”/ 19mm（5米/ 15英尺长）和回流软管：ID 0.75”/ 19mm（5米/ 15英尺长）和软管包装。

Figure 5: CIP Cart-Side View
图5：CIP小车-侧视图

Figure 6: CIP Cart-Back View
图6：CIP小车-背视图

Catalog number: SAB012900
部件号：SAB012900

See the diagram below.
下面是流程图

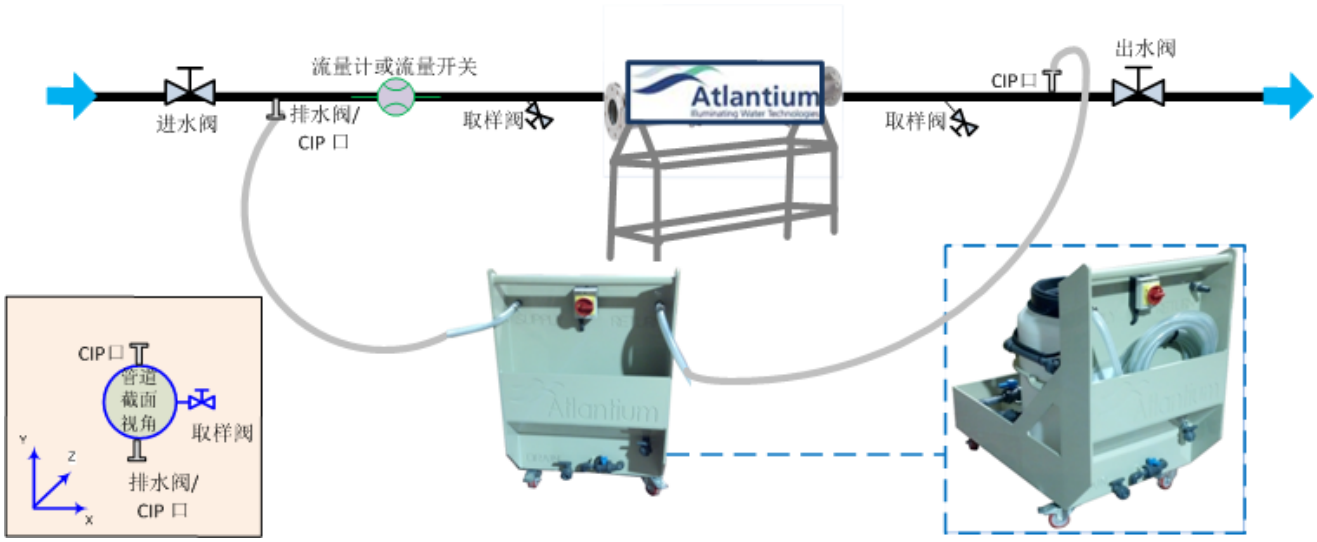

Figure 7: CIP Recirculation System Connections
图7：CIP循环系统连接

CIP Accessories and Kits Available from Atlantium

可从安特蓝德购买的CIP辅件和套件

One Accessory kit is required for each CIP port.
每个辅件用于一个CIP口

Table 6: CIP Accessory Kits

表6：CIP辅件套件

Description 描述	Image 图片	Catalog number 部件号	Kit for Stainless Steel Pipe KT0011600 用于不锈钢管	Kit for Plastic Pipe KT0011700 用于塑料管
Long welding ferrule – for welding the tri-clamp port to the pipe **长焊接套管** – 用于将卡箍接头焊接在管道上		FAC003700	X	-
Threaded Male Adapter 1/2" BSP – for connecting the tri clamp port to the plastic pipe **公螺纹接头1/2" BSP –** 用于卡箍接头和塑料管的连接		FAB008100	-	X

Table 6: CIP Accessory Kits

表6：CIP辅件套件

Description 描述	Image 图片	Catalog number 部件号	Kit for Stainless Steel Pipe KT0011600 用于不锈钢管	Kit for Plastic Pipe KT0011700 用于塑料管
Gasket 1" – for sealing the valve connected to the pipe **垫圈1" –** 用于阀和管道的密封		FA0000046	X	X
Hose Adaptor 1” - to attach the CIP hose **软管接头1” –** 连接CIP软管		FAB005700	X	X
Clamp 1.5" – for connecting the valve to the welded port **卡箍夹1.5" –** 用于阀和焊接头的连接		FA0000045	X	X
End cap 1.5” – covering the CIP port while not in use **端盖1/2” –** 用于CIP不用的时候盖CIP口		FAC004100	X	X

CIP Safety Devices

CIP安全装备

Required but not included in Atlantium's CIP Kits: protective devices such as goggles, clothing and gloves (chemical-safe) according to the specified safety standards at your facility.

需要但不包括在安特蓝德CIP套件内的安全装备：根据厂区规定的安全标准的保护装备如护目镜，衣物和手套（化学安全）。

Connection to Facility Control

连接厂区控制系统

Options are available to set up control of the Atlantium system via your facility control system. Control setup can be made via any of the following:

- 可选择通过贵方的厂区控制系统监控安特蓝德系统。控制系统可通过以下几种方式：
  MODBUS - RS232 (PTP) or RS485 (network) serial connection directly to the Facility control (Appendix A, Modbus Communication Protocol in your Atlantium System User Manual.)
  MODBUS - RS232 (PTP)或RS485（网络）串口直接连接到设备（见《安特蓝德用户手册》附录A《Modbus通信协议》）
- Dedicated computer station - Ethernet LAN or wireless (TCP/IP) with TRAC Software installation for constant system monitoring and data logging - available upon purchase of license (See below)
  专用计算机站—以太局域网或无线网络（TCP/IP），配有TRAC软件，用于持续性监控及记录系统的数据—购买许 可证后可用（见下面内容）
- Signal control - utilizing System Ready, External On/Off, and General Alarm functions, etc. (***Auxiliary Connections*** on page 36)
  信号控制 - 系统就绪、远程开/关和通用报警等功能（见第36页的连接辅件）
- With any of the above control options, you can still utilize the function of the controller of the Atlantium system. Whichever control facility is utilized, the system communicates to the other control systems such that the last command issued determines the current status.
  无论选择上面的哪种控制，贵方仍可使用安特蓝德系统控制屏操作。无论使用何种控制设施，安特蓝德系统都可 以与其他控制系统交互，当前状态由最后一个下达指令决定。

Installing the Atlantium System

安装安特蓝德系统

Hardware setup phases to be implemented by your facility personnel:

硬件设置阶段由您工厂人员实施：

Phase 1 Unpacking and checking the contents of the Atlantium system packaging (see your Atlantium System User Manual)

阶段1. 开箱检查的安特蓝德系统包装（见贵方《安特蓝德用户手册》）

Phase 2 Placing the Atlantium Unit and connecting it

阶段2 将安特蓝德设备放置到指定位置并进行连接

Phase 3 Mounting the Ballast Module(s), Controller, etc.

阶段3 安装镇流器模块、控制屏等

Phase 4 Cabling the Ballast Module(s) and Controller

阶段4 镇流器模块和控制屏的布线

Installation Process Flow Diagram

安装流程图：

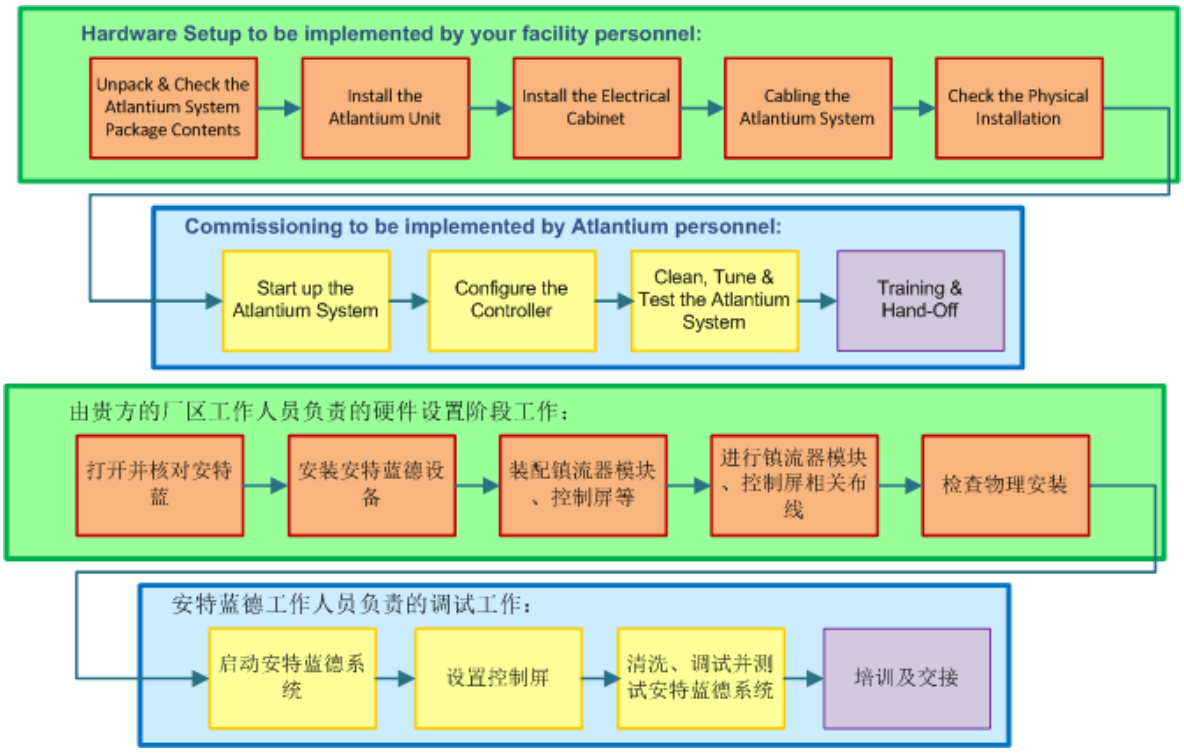

Figure 8: Installation Flow Diagram
图8：安装流程图

Setting the Main Circuit Breakers to OFF Position

关断主断路器到OFF位置

Before beginning work to connect the wires/cables of the Atlantium system components, turn the main circuit breakers of the electrical lines feeding the Atlantium system components to the OFF position. **Verify that no electrical feed to the Atlantium system components is live.**

在开始连接的安特蓝德系统部件的电线/电缆前，将安特蓝德系统组件供电电缆的主断路器关到OFF位置。**确认安特蓝德系统是没有供电的。**

WARNING!!!

警告!!!

UNDER NO CIRCUMSTANCES

SHALL ELECTRICAL WORK BE CARRIED OUT WITHOUT VERIFYING THAT ALL MAIN CIRCUIT BREAKERS OF THE ELECTRICAL LINES FEEDING THE ATLANTIUM SYSTEM COMPONENTS ARE SET TO THE OFF POSITION AND THAT NO ELECTICAL FEED IS LIVE.

在任何情况下

只有在确认安特蓝德系统进线电源的所有主断路器都处于OFF位置，系统没有电的情况下，才能进行电气工作。

DO NOT SET ANY MAIN CIRCUIT BREAKER OF THE ELECTRICAL LINES FEEDING THE ATLANTIUM SYSTEM COMPONENTS TO THE ON POSITION UNTIL ALL ELECTRICAL WIRING IS PROPERLY CONNECTED. UNCONNECTED WIRES/CABLES IN A LIVE ELECTRICAL FEED IS A HAZARDOUS SITUATION THAT CAN RESULT IN DEATH OR SERIOUS INJURY.

在所有电气线路连接妥当之前， 不得将安特蓝特系统进线电源的任何主断路器设定到ON的位置。在通电情况下，未连接好的线路/电缆很危险，会造成死亡、或严重伤害等事故。

Positioning the Atlantium Unit

安特蓝德设备就位

Read through this typical installation section ***before*** you begin.

开始***前***，先**阅读**这个典型安装的部分。

Make sure to use your installation drawing during this procedure. The Unit must rest on a strong, stable, level surface and anchor the Unit.

在安装过程中查看您的安装图。设备必须安放在坚固、稳定的水平面上。

Installing the **RS104** Unit is similar to the **RZ104** Unit installation, only the **RS104** Unit is much smaller.

安装**RS104**设备类似于安装**RZ104**设备，只是**RS104**设备更小。

Required Equipment

需要用到的设备

The following tools and equipment are required:
以下的工具和设备是必需的：

- Lift or transport
  电梯或搬运设备
- Supplied bolts, washers & lock washers appropriate to your piping adaptor type
  合适您管道接头型号的螺栓、垫圈和锁紧垫圈
- Supports for inlet/outlet piping and for the Unit as shown on your installation plan
  您的安装计划中的进口/出口管道

To place the Atlantium unit:
放置安特蓝德设备

Step1. Transport the Unit and Electrical Cabinet to its intended location.
步骤1. 将设备和电气柜运送到预定位置。

Step2. At the designated locating, check the installation plan, including the minimum height of the Unit from the floor.
步骤2. 在预定位置，查看安装计划，包括离地面的最小高度。

Step3. Ensure that the Unit is place so that the lamps are in a diagonal position vis a vis the floor (not perpendicular to the floor).
步骤3. 确保该设备的位置相对地面使灯管处于对角（不垂直于地面）。

Step4. Carefully lower the Unit and using the appropriate bolts, washers and lock washers.
步骤4. 运用适当的螺栓、垫圈和锁紧垫圈小心地降低设备。

Step5. To connect the fitting on one side of the Unit to the fittings of the facility's pipes:
步骤5. 连接设备侧面到管道配件：

- Insert an o-ring between the Unit's and the facility's pipes. In some cases, a reducer or expander may be necessary.
  设备和管道之间插入密封圈。在某些情况下，可能需要变径。

- When sealing the flanges/ferrules and gaskets, **do not** use sealing material that contains graphite as it is corrosive to the stainless-steel components of the Atlantium system.
  不要使用含有石墨的密封法兰/卡箍和垫片密封材料，因为会腐蚀安特蓝德系统不锈钢构件。

- For systems with flange interface, on one side of the Unit to the flanged fittings of the facility's pipes with eight appropriate **(8)** sets of bolts/nuts/flat and lock washers - do not tighten the hardware.
  对于法兰接口的系统，在设备一边，法兰带有**(8)**组适当的螺栓/螺母/平垫圈和锁紧垫圈连接厂区管道的法兰，先不要紧固硬件。
- For systems with Tri-Clamp fittings, on one side of the Unit, clamp the fittings together - do not tighten the hardware.
  对于卡箍接口的系统，在设备一边，将卡箍接口夹紧，先不要紧固硬件。

Step6. Repeat the step above for the other side of the Unit.

步骤6. 在设备另一边重复上述步骤。

Step7. Tighten the fastening hardware so that the torque pressure around the fittings is even, and the Unit is firmly connected to the facility's water line.

步骤7. 紧固硬件以使接头周围的扭矩压力均匀，设备与管道连接牢固。

Step8. To check for any leakage, open the Inlet and Outlet valves to allow water to flow through the newly installed Unit and its surrounding process piping.

步骤8. 打开进水和出水阀门让水流过新安装的设备及其周围管道，检查是否漏水。

Figure 9: Generic Flange fitting to the Water Line
图9：法兰连接管道

Step9. If you find any leakage, tighten the connections.

步骤9. 如果发现任何泄漏，拧紧连接件。

Step10. Close the Inlet and Outlet valves and use the Draining valve, drain the Atlantium system piping from Inlet valve to Outlet valve.

步骤10. 关闭进水和出水阀，使用排水阀排出安特蓝德系统管道进水阀到出水阀之间的水。

Installing Sampling Points and CIP/Draining Ports

安装取样口和CIP口/排水口

Both the Sampling Points and CIP/Draining Ports must be installed on the inlet and outlet sides of the Atlantium Unit.

两个取样口和CIP口/排水口必须安装在安特蓝德设备进水口和出水口端。

Installing the Inlet/Outlet Sampling Points

安装进/出取样口

Aseptic sampling valves are to be located indoors in clean environment without away from direct contact with fan or A/C air flow. They each must be a dedicated valve for sampling only and resistant to alcohol and flame. For information on the Sampling valve's components, see ***Sampling Valve Components and Kits*** on page **19**. See ***Taking Microbial Samples*** on page **54** for information on using the Sampling valves.

无菌取样阀应位于清洁环境的室内，远离直接接触的风扇或空调。它们必须是专用于取样的阀，只用于取样，耐酒精和火焰。有关取样阀组件的信息，见第**19**页***取样阀组件和套件***。关于使用取样阀的使用信息见第**52**页的***微生物取样***。

On the inlet and outlet sides of the water line, connect the aseptic sampling valves.

在管道的进口和出口处，安装无菌取样阀。

To install an inlet / outlet sampling point:
安装进 / 出取样口：

Step 1. On the Inlet side, install the **Long welding ferrule** or **threaded male adapter (1).**

步骤1. 在进口侧，安装**长焊接套管**或**外螺纹接头(1)**。

Figure 10: Generic welded ferrule (Threaded male adapter is placed in the same position vis a vis the pipe)
图10：通用焊接套管（外螺纹接头在相对于管道相同的位置）

- Position aseptic sampling valves **(1&2** in **) horizontally** (90^0) on the pipe center, within 50cm of the Unit.
  在管道中心水平(90^0)安装无菌取样阀**(1&2)**，离设备50cm以内。
- **For Stainless Steel. Pipes:**
  对于不锈钢管道：
  - Weld the 1 inch **ferrule (1)** clamp fitting at a horizontal orientation (3 or 9 o'clock).
    焊接1英寸**套管(1)**装配在水平方向（3或9点钟方向）。
  - Perform a polishing process to achieve a smooth area on the external and internal part of the pipes.
    对管道内部和外部进行抛光。
  - Passivate the pipes to avoid corrosion.
    钝化管道避免腐蚀。
- **For Plastic Pipes:**
  对于塑料管道：
  - Thread the **male adapter (1)** clamp fitting to the port.
    外螺纹接头(1)安装到取样口。
- Repeat for the Outlet side sampling point.
  在出口侧的取样点重复上述步骤。

Step 2. Fit the 1” gasket **(2)** into the **welding ferrule** or **threaded male adapter (1).**

步骤2. **在焊接套管**或**外螺纹接头(1)**处安装1”密封垫**(2)**。

Step 3. Fit the aseptic **sampling valve (4)** on over the gasket **(2).**

步骤3. 在密封垫**(2)**上安装的**无菌取样阀(4)**。

Step 4. Fit the clamp **(3)** around the aseptic **sampling valve (4)**/gasket **(2)/welding ferrule** or **threaded male adapter (1)** and close and lock it.

步骤4. 在无菌**取样阀(4)**/垫片**(2)/焊接套管**或**外螺纹接头(1)**安装卡箍夹**(3)**并锁紧它。

Figure 11: The clamp is placed around the aseptic **sampling valve** /gasket **/welding ferrule** or **threaded male adapter**
图11：安装卡箍夹在无菌**取样阀**/垫片/**焊接卡箍或外螺纹接头**

Closing Off the Aseptic Sampling Valve When Not in Use
无菌取样阀在不使用时关闭。

Step 5. Into the spout of the sampling valve, fit the 1/2”gasket **(6)** and fit the cap **(7)** over it.

步骤5. 在取样阀喷口安装1/2”垫片**(6)**，并将端盖**(7)**盖在上面。

Step 6. Fit the 1/2” clamp **(5)** around the sampling valve spout/ gasket **(6)** /cap **(7)** and close and lock it.

步骤6. 在取样阀喷口/密封垫**(6)** /端盖**(7)**安装1/2”卡箍夹**(5)**并锁紧。

Figure 12: The clamp is closed

图12：卡箍夹锁紧

Figure 13: The clamp is closed

图13：卡箍夹锁紧

Installing the CIP / Draining Ports

安装CIP口 / 排水口

The CIP (Cleaning-In-Place) recirculation system is used for the periodic cleaning and sterilization process of the Atlantium unit's inner surfaces and quartz tube. For more information on performing CIP, see on page **46**.

CIP（在线清洗）循环系统用于定期的清洗和消毒安特蓝德设备的内表面和石英管。有关执行CIP，更多信息见第**46**页。

A CIP KIT includes the CIP Cart with 100 liter (26.5 gallon) reservoir and a pump, capable of pumping up to 4 cubic meters per hour. It includes a supply hose: ID 0.75" / 19mm (5 meters / 15 feet long) and a return hose: ID 0.75" / 19mm (5 meters / 15 feet long) and pocket to hold these hoses. See the diagram below.

CIP套件包括自带100升(26.5加仑)水箱和泵的CIP小车，泵能抽到每小时4立方。它包括进水软管：ID 0.75" / 19mm(5米/ 15英尺长)和回流软管：ID 0.75" / 19mm(5米/ 15英尺长)和包装来装这些软管。见下图。

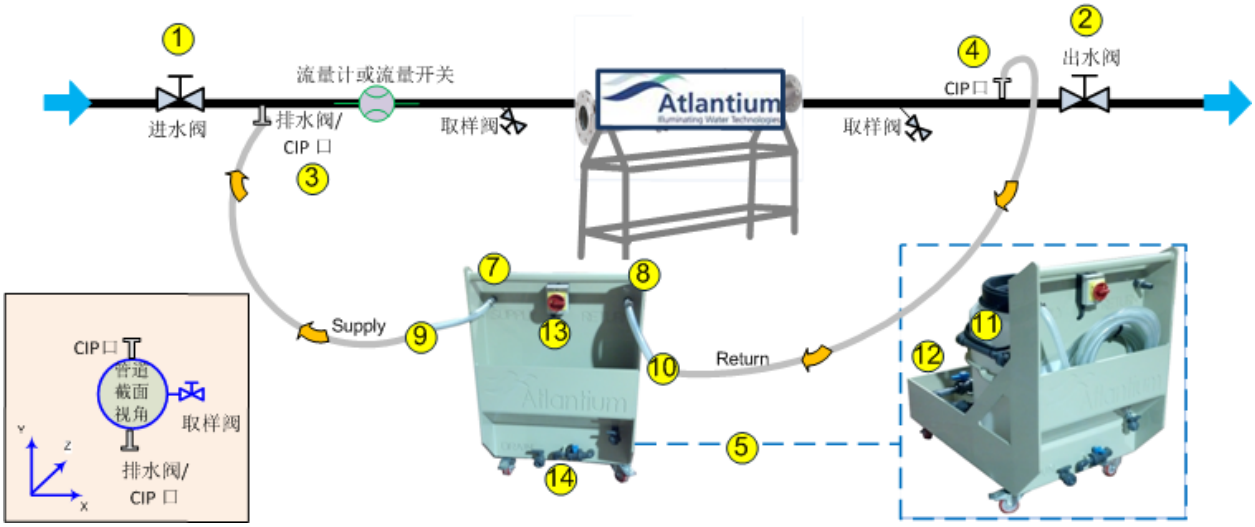

Figure 14: CIP Ports and Sampling Valves Orientation

图14：CIP口和取样阀位置

Position the CIP/draining valves **(3&4)** on both the inlet and outlet sides of the Atlantium unit. To enable connection of the CIP kit, use high-quality, sanitary equipment, including a 1 inch tri-clamp/ferrule on both sides. A CIP/Draining valve is to be located 1D after the Inlet valve and 1D before the Outlet valve. When not using the CIP [ports. close the valve outlet using the tri-clamp cover.

连接CIP/排水阀**(3&4)**上的入口和出口到安特蓝德设备。为了能连接CIP组件，两边采用包括1英寸的卡箍的优质卫生设备。各一个CIP/排水阀位于进水阀前1D和出水阀后1D的位置。当不使用CIP口时用端盖盖住阀门出口。

To install the CIP ports:
安装 CIP 口：

Step1. Weld or thread the 1 inch ferrule at a vertical orientation:

For municipal applications, prepare 1” screw ports for the valves and insert the valves:

步骤1. 在垂直方向焊接或螺纹1英寸套管：

如果是市政应用，准备1”螺纹口的阀并插入：

Figure 15: Generic welded ferrule (Threaded male adapter is placed in the same position vis a vis the pipe)
图15：通用焊接套管（如果是外螺纹接头在相对于管道的相同位置）

- **Draining Valve:** at a 6:00 o'clock orientation on one side of the Atlantium unit.
  排水阀：对准安特蓝德设备一侧的6点钟方向。
- **CIP Valve:** at a 12:00 o'clock orientation on other side of the Unit.
  CIP阀：对准设备的另一侧的12点钟方向。

For all application except municipal:
除市政以外的所有应用：

For Stainless Steel. Pipes:
对于不锈钢管道：

Weld the 1 inch clamp fittings:
焊接 1 英寸卡箍配件：

- **Draining port:** at a 6:00 o'clock orientation on one side of the Atlantium unit.
  排水口：对准安特蓝德设备一侧的6点钟方向。
- **CIP port:** at a 12:00 o'clock orientation on other side of the Unit.
  CIP阀：对准设备的另一侧的12点钟方向。
- Perform a polishing process to achieve a smooth area on the external and internal part of the pipes.
  对管道内部和外部进行抛光。
- Passivate the pipes to avoid corrosion.
  钝化管道避免腐蚀。

For Plastic Pipes:
对于塑料管道：

- Thread the clamp the valve fittings to the port.
  卡箍夹紧螺纹套管和取样口。

Closing Off the CIP/draining Ports When Not in Use
在不使用时关闭CIP口/排水口

Step2. Into the ferrule, fit the 1/2”gasket **(6)** and fit the cap **(7)** over it.

步骤2. 卡箍配合1/2”垫片**(6)**并安装端盖**(7)**。

Step3. Fit the 1/2” clamp **(5)** around the CIP port/gasket **(6)** /cap **(7)** and close and lock it.

步骤3. 卡箍夹**(5)**安装在1/2”CIP端口/密封垫**(6)**/端盖**(7)**并锁紧。

Figure 17: The clamp is placed around the CIP port /gasket /cap

图17：卡箍夹紧固CIP端口/垫片/端盖

Figure 16: The clamp is closed

图16：卡箍夹锁紧

Preparing the CIP Hoses
准备CIP软管

Step 4. On one end of a hose **(A)**, using an appropriate screwdriver, loosen the band **(C)**.

步骤4. 软管的一端(A)**，用合适的螺丝刀松开卡箍**(C)**。**

Step5. Connect the hose to one of the adapters on the cart (B)**. Push the hose up a far as you can.**

步骤5. 将软管连接到CIP小车其中一个端口(B)**。尽量上推软管。**

Step6. Using the screwdriver, tighten the band (C)**.**

步骤6. 用螺丝刀拧紧卡箍**(C)**。

Step7. On the other end of a hose **(D)**, using an appropriate screwdriver, loosen the band **(F)**.

步骤7. 软管的另一端**(D)**，用合适的螺丝刀松开卡箍**(F)**。

Step8. Connect the hose to one of the hose adapters **(E)**. Push the hose up a far as you can.

步骤8. 将软管连接到另一个软管接头**(E)**。尽量上推软管。

Step9. Using the screwdriver, tighten the band **(F)**.

步骤9. 用螺丝刀拧紧卡箍**(F)**。

Step10. Repeat with the second hose to the adapter on the other side of the cart.

步骤10. 在CIP小车的另一边连接另一个软管接头。

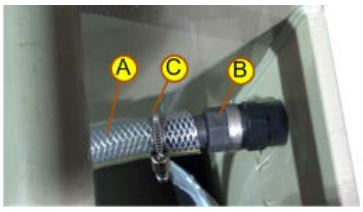

Figure 18: Hose Connection to One Side of Cart

图18：软管连接到CIP小车的一端

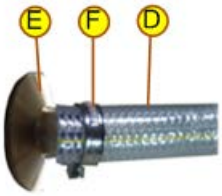

Figure 19: Hose Connection to Hose Adapter

图19：软管连接接头

Installing the Electrical Cabinet

安装电气柜

The location of the Electrical Cabinet must be designated according to the maximum distance needed for positioning the **Cable Harness** of the Atlantium Unit. The length of a standard **Cable Harness** that connects the Atlantium Unit to its Electrical Cabinet is **5 meters (16.5 ft.)**. An optional **10 meter (33 ft.)** cable is available upon request.

电气柜的计划位置必须在安特蓝德设备**电缆束**所达到的最大距离内。连接安特蓝德设备电气柜标准的**电缆束**长度是**5米(16.5英尺)**。可根据用户要求提供**10米(33英尺)**的电缆。

Locate the Electrical Cabinet according to the design made for the path that the **Cable Harness** is to be placed.

安放电气柜的**电缆束**到设计路径上。

The Electrical Cabinet can be mounted on a wall or appropriate anchoring point.

电气柜可安装在墙上或适当的支架上。

The Electrical Cabinet includes fans and filters on the top and bottom of each side. It must have at least 50cm (19.7 inches) of clearance on its right and left sides for proper ventilation. To review the complete clearance requirements of the Electrical Cabinet, see ***Installing the Electrical Cabinet*** on page **31**.

电气柜每侧的上部和下部有风扇和过滤棉。电气柜左右两侧要保留至少50厘米（19.7英寸）间隙来保持通风。检查电气柜的完整的间隙要求，见第**31**页的***安装电气柜***。

The power cable and connecting plug are to be obtained locally.

电源线和连接插头都在当地购买。

To position the Electric Cabinet:
电气柜就位：

Step 1. Uncrate the Electrical Cabinet package.

步骤1. 拆箱取出电气柜。

The Electrical Cabinet of the Atlantium system is heavy! - It are to be lifted and carried by mechanical means.

安特蓝德系统的电气柜很重！— 它要用机械装置抬升搬运。

Step 2. Move the Electrical Cabinet to its location designated according to installation plan.
步骤2. 将电气柜搬运到计划安装的位置。
Step 3. Lower the Electrical Cabinet to its designated location.
步骤3. 将电气柜放到指定位置。
Step 4. As appropriate, bolt the Electrical Cabinet to the wall or anchoring point. Refer to the diagram to the right.
步骤4. 用适当的螺栓把电气柜固定到墙壁或支架。参考右图。

Figure 20: RS104 Electrical Cabinet
图20：RS104电气柜

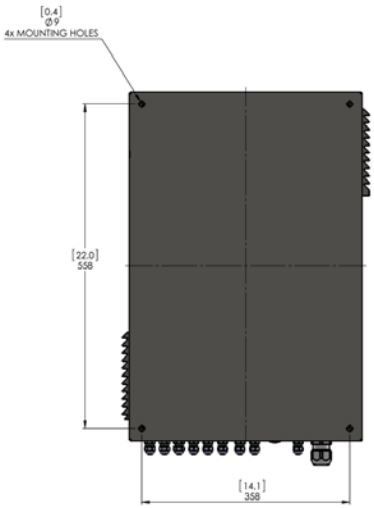

Figure 21: RS104 Electrical Cabinet Mounting Holes
图21：RS104电气柜安装孔

Cabling Inside the Electrical Cabinet

电气柜内布线

Refer to the appropriate wiring diagram in ***Wiring Diagrams*** above
参阅上面*布线图*中的接线图

DO NOT DRILL INTO THE ELECTRICAL CABINET OR ALTER THEM IN ANY WAY!!!!
不要电气柜里钻孔，或者用任何方式改变它们！！！！
The Electrical Cabinet already contains entry glands for ALL of the cabling needs.
电气柜已经包含了布线需要的所有格兰头。
Making holes in a Electrical Cabinet will destroy its waterproof seal, endangering the components inside.
电气柜上的孔会破坏它的防水密封，危及内部组件。
Do not connect any wires or cables to any of the connectors on the terminal blocks or to any other connectors in the Electrical Cabinet that are not specified in your system configuration or without the express instructions from Atlantium personnel. Unauthorized connections may damage the system and void the Atlantium warranty.
不是系统配置或者没有安特蓝德人员指导，不要连接任何电线或电缆到电气柜内的端子。未经授权的连接，可能会损坏系统并且安特蓝德保修失效。

Any person involved in handling the Electrical Cabinet's Connection card or its components is required to wear an electrostatic discharge (ESD) Wrist Strap.
接触电气柜的主板或其它部件的人必需戴静电放电（静电）手腕带。
Connect the ESD Wrist Strap to any bolt on the body of the Atlantium Unit or to the body of the Electrical Cabinet using a banana plug or an alligator clip.
将静电腕带的香蕉插头或鳄鱼夹连接到安特蓝德设备的主体或电气柜的任意螺栓。

Cable Harness

电缆束

The Atlantium Unit comes with the **Cable Harness** assembly already connected between the **RS104** Unit and the Electrical Cabinet. You must position the **Cable Harness** assembly in a path that does not obstruct access to the Atlantium Unit or the Electrical Cabinet or any other access pathways.
安特蓝德已经连接好了**RS104**设备和电气控制柜之间的**电缆束**。 您需要安排**电缆束**，不妨碍进入安特蓝德设备或电气柜或其它通道。
In the diagram to the right, **A** identifies the Connection Card. **B** identifies the incoming cables of the **Cable Harness**.
右图**A**是一个连接主板。**B**是**电缆束**的进口。
The **Cable Harness** contains cables according to the table below.
下表是**电缆束**包含的线缆。

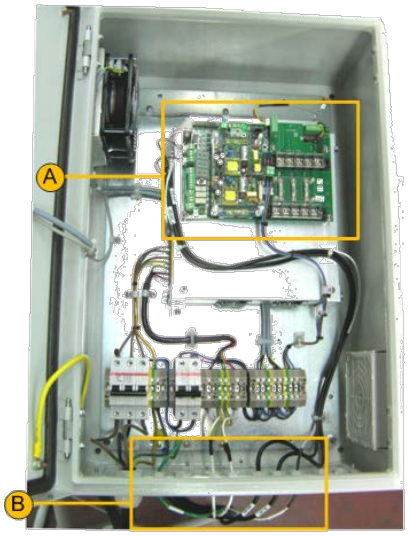

Figure 22: Inside the Electrical Cabinet
图22：电气柜内部

#	Item 项目
1	Grounding/Earthing wire 地线
2	110V (for locations with 480VAC only) 110V（只用于当地是480VAC）
3	Lamp cable A 灯管电缆A
4	Lamp cable B 灯管电缆B
5	UVIS Sensor cable UVIS传感器电线
6	UVT Analyzer cable UVT传感器电线
7	Temperature Sensor cable 温度传感器电线

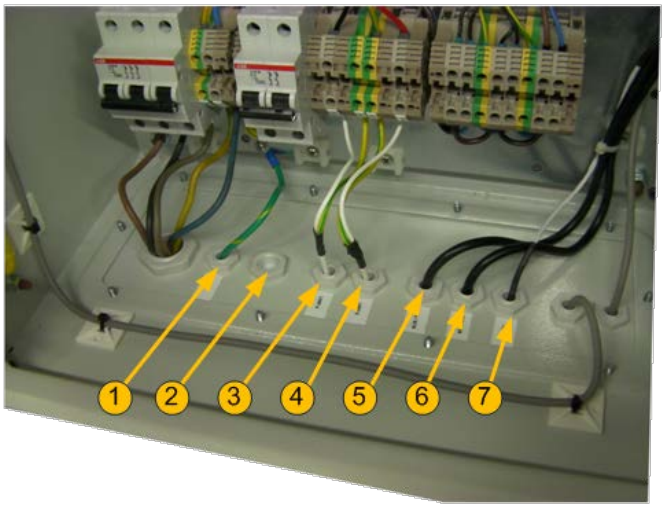

Figure 23: Cable Harness
图23：电缆束

Auxiliary Connections

连接辅件

The Auxiliary connection information is the same as for **RZ104** Signal Connections Key (on Connection Card 1300).
辅件连接信息和**RZ104**信号连接相同（主板1300）。

To connect the flow signal:
连接流量信号：

Step 1. Open the plastic gland marked **A** and thread the Flow signal cable through it until the cable reaches the Connection card terminal.

步骤1. 打开塑料格兰头**(A)**，把流量信号线穿过一直到主板的末端。

Step 2. Connect the cables to the appropriate terminal **(D)**. See **# 4** or **5** in the diagram and table above.

步骤2. 将电缆连接到正确的接线端子**(D)**。见上表的**# 4**或**5**。

Step 3. Fasten the cable to the anchor point **(B)** using a plastic fastener.

步骤3. 用扎带将电线固定在固定座**(B)**上。

Step 4. Fasten the cable to the other cables **(C)** using plastic fasteners.

步骤4. 用扎带将电线固定在其他电线**(C)**上。

Step 5. Cut the excess from the plastic fasteners.

步骤5. 剪掉多余的扎带。

Step 6. Tighten the plastic gland **(A).**

步骤6. 拧紧格兰头**(A)**。

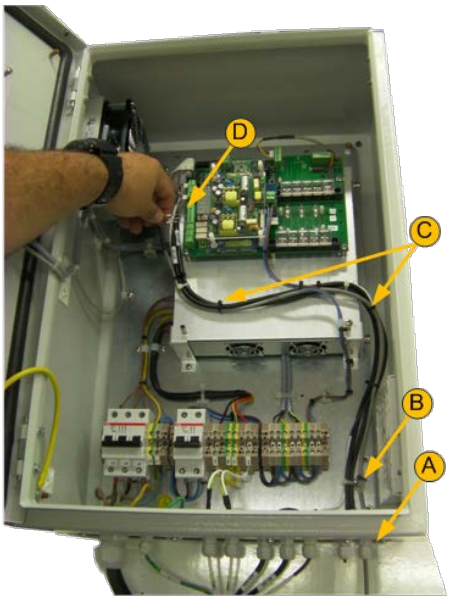

Figure 24: Signal Connection Cable to the Connection Card
图24：信号连接线连接到主板

Controller Connections

连接控制屏

The **Controller** connections are the same as for the other systems, however the Connection Box card resides inside the Electrical Cabinet.

控制屏的连接和其它系统相同，只是主板是在的电气柜内。

The **Controller** includes the following connections:

控制屏包括以下连接：

Power Cable (already assembled)

电源线（已安装）

External On/Off Signal

远程开/关信号

General Alarm Signal

通用报警信号

Data Cable

数据线

Modbus

Avoid direct contact with the electronic circuit board which is sensitive to electrostatic discharge (ESD). Utilize best practices regarding ESD when replacing the power cable.
避免与电路板直接接触，电路板对静电放电敏感。更换电源线时，使用最好的防静电措施。

To connect peripheral equipment:
连接外围设备：

Step 1. To connect an **External On/Off** signal, thread the signal cable through one of the available holes with plastic glands on the bottom **(A)** and extend the cable **(B)** along the bottom and left side of the Electrical Cabinet, along the door until it reaches the appropriate terminal on the **Controller**.

步骤1. 连接**远程开/关**信号，信号电缆穿过底部**(A)**的一个塑料格兰头孔，沿电气柜左侧延伸电缆**(B)**，沿着门直到**控制屏**的接线端子。

Step 2. Using plastic fasteners, fasten the cable to the anchors **(D)** along the path.

步骤2. 用塑料紧固件将电缆固定到固定座**(D)**上。

Step 3. Connect the cable's leads to the terminals according to the diagrams and table below.

步骤3. 根据下面图表连接电缆端子。

Step 4. To connect a **General Alarm** signal, follow the directions as for the **External On/Off**.

步骤4. 连接**通用报警**信号，仿照**远程开/关信号**。

Step 5. To connect to an external facility control via Modbus, follow the directions as for the **External On/Off**. For more information, see Appendix **A**, ***Modbus Communication Protocol*** on page **1**.

步骤5. 通过Modbus连接远程控制，仿照**远程开/关**信号。有关更多信息，请参见《安特蓝德用户手册》附录**A**第**1**页***Modbus通信协议***。

Step 6. Add jumpers to any unused pins.

步骤6. 短接不用的跳线。

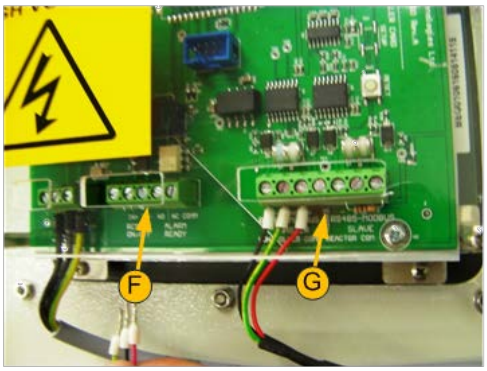

Figure 25: Controller Terminal Connectors-1
图26：控制屏终端连接-1

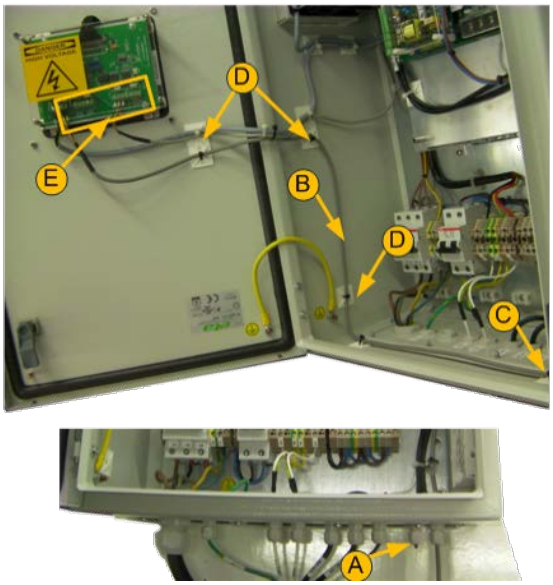

Figure 26: Path of Cables Added to the Controller
图25：连接控制屏的电缆路径Figure

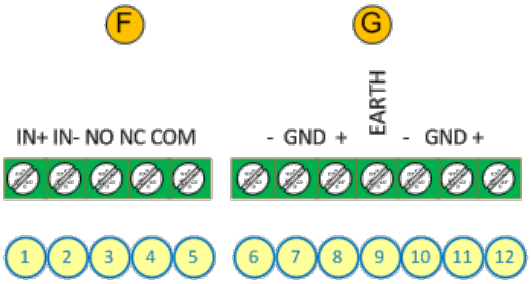

Figure 27: Controller Terminal Connectors-2
图27：控制屏终端连接-2

Table 7: Controller Connector Pins
表7：控制屏连接引脚

#	Item	
1	External On/Off IN+ 远程开/关IN+	On: 20-28VDC Off: <1VDC See ***External On/Off - Additional Notes*** below. 开：20-28VDC 关：<1VDC 见*远程开/关-附加说明*如下。
2	External On/Off IN- 远程开/关IN-	
3	General Alarm/System Ready Dry Contact Normally Open **NO** 通用报警/系统就绪干接点常开**NO**	
4	General Alarm/System Ready Dry Contact Normally Closed **NC** 通用报警/系统就绪干接点常闭**NC**	
5	General Alarm/System Ready Dry Contact Common **COM** 通用报警/系统就绪干接点公共**COM**	
	Data Cable Connectors **数据线连接**	
6	RS485 / Modbus Master TX- RS485 / Modbus Master TX-	Cable is provided already attached. 电缆已经提供
7	RS485 / Modbus Master Ground RS485 / Modbus Master地	
8	RS485 / Modbus Master TX+ RS485 / Modbus Master TX+	
9	Earthing connector 地线连接	
10	RS485 / Modbus Slave TX- to connect to an external control system RS485/ Modbus Slave TX -连接到外部控制系统	The **Controller** is provided including a **100R, <5% , 0.25W, Through hole resistor** between **#13** and **#15**. This resistor is to be removed in **Controllers** connected by daisy-chain, but is to be left attached in the last **Controller** of the daisy-chain. 该控制屏#13和#15之间包括一个100R，＜5%，0.25W通孔电阻。这个电阻在串联的控制屏上是被拿掉的，但在串联的最后一个控制屏上保留。 See ***Cabling Inside the Electrical Cabinet*** on page 35. 见第35.页*电气柜内布线*。
11	RS485 / Modbus Slave Ground RS485/ Modbus Slave地	
12	RS485 / Modbus Slave TX+ RS485/ Modbus Slave TX+	

External On / Off - Additional Notes

远程开 / 关-附加说明

For regular wiring:
接线规则：
Positive voltage must be connected to pin 4 – IN+
正极必须连端子4 – IN+
Negative (GND) must be connected to pin 5 – IN-
负极（地）必须连端子5 – IN+

Table 8: External On/Off

表格 8：远程开/关

Controller Screen More Settings 控制器面板上更多设置	Physical Connection 物理连接	Physical Connection 物理连接	
	IN+	IN-	Lamp Control 灯管控制
NC Unchecked 常闭没选中	0 VDC	0 VDC	Off 关
NC Unchecked 常闭没选中	+24 VDC	0 VDC	On 开
NC Checked 常闭选中	0 VDC	0 VDC	On 开
NC Checked 常闭选中	+24 VDC	0 VDC	Off 关

Connecting the Main Power Cable

连接主电源线

The main power cable that you prepared for this installation must be attached to the Electrical Cabinet.
为本次安装所准备的主电源线必须连接到电气柜上。

WARNING!
警告！

- The electrical connections must be performed by a qualified electrician **ONLY**.
  只有持证电工才能进行电气连接。
- **Do not** plug in the Unit's Power cable to an outlet until after the hardware installation is complete and the system is ready to be initialized.
  电源线不要通电直到硬件安装完成系统可以初始化。

To connect the power cable to the Electrical Cabinet:
电源线连接到电气柜：

Step 1. On the bottom-left side of the cabinet, open the cable gland **(A)** and insert the end of the power cable into the cabinet, ensuring that the cable can reach the main power connections **(B)** without tension.
步骤1. 在电气柜的左下角，松开格兰头**(A)**，将电源线插入到电气柜中，确保电源线不受张力地连接到主电源连接端子**(B)**。
Step 2. Fasten the cable gland's plastic nut.
步骤2. 紧固电缆的格兰头螺母。
Step 3. Connect the cable's power leads according to the local voltage:
步骤3. 依据当地电压连接电源线：

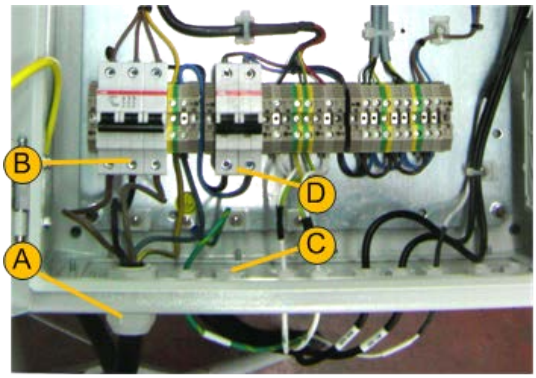

Figure 28: Main Power Cable Connections
图28：电源线连接

- 400 VAC
  5-wire system:
  400 VAC
  5线制：

Connect three leads to the terminals marked **L1**, **L2** and **L3**.
连接 3 根导线到端子 L1，L2 和 L3。
Connect the fourth and fifth lead Neutral and Ground to terminals marked **GN1** and **GN2**.
连接第 4 和第 5 的零线和地线标记 **GN1** 和 **GN2**。

Installation Check List

安装检查清单

When you are ready to schedule the Atlantium technician to commission the Atlantium system, complete the check list below. In addition, take photos of the installation from various angles to show all views of the installed system. Send this check list and the photos to your Atlantium representative. It generally requires at least 2 weeks after the check list has been completed to schedule the Atlantium commissioning.

当您准备与安特蓝德工程师约定时间调试安特蓝德系统前，完成下面的检查清单。此外，从不同的角度对安装拍摄照片，显示安装系统的所有视角。将检查清单和照片发送给安特蓝德代表。在完成检查清单后，一般需要至少 2 星期安特蓝德才能安排调试。

Table 9: Installation Check List

表9：安装检查清单

Item 项目	Done 完成情况
■ The System is installed: 系统已安装： ❑ Vertically 垂直 ❑ Horizontally 水平	
■ The Atlantium Unit, Ballast Module and other components are located in their final position. 安特蓝德设备，镇流器模块和其他组件已经放置在最终位置。	❑
■ All of the System components have sufficient service clearance on all sides (according to ICDs). 所有系统组件的四周有足够的维修空间（根据ICDs要求）。	❑
■ All power preparations are complete and Power connects are wired as instructed in this guide. 所有的电源准备工作完成，电源连接已经按本手册指导布线。 ■ Correct voltage was measured where the Power connects to the Ballast Module 测量电源连接到镇流器模块的电压正确 ■ Voltage rate _____ Number of phases _____ 电压 相数	❑ ❑
■ The Atlantium Unit is connected to the water pipes according to the Installation plan developed by facility engineers and Atlantium personnel. 按照设备工程师和安特蓝德人员的安装计划，安特蓝德设备已经连接管道。	❑
■ Water flows through the Atlantium Unit - The Unit has been checked while full of water and no bubbles or leaks exist in the system. The system is balanced, supported and pressure stable (no vibration, etc.). No known water hammers or pressure above 10 bars are on the line. 水流经安特蓝德设备 - 已确认充满水，无气泡或泄漏。系统平衡、支撑、压力稳定（无振动等）。没有水锤或压力超过10Bars。	❑

■ All piping accessories are installed and wired as instructed in this guide (e.g., Inlet/Outlet valves, sampling valves, draining valves, CIP valves, air release valve, etc.) 按本手册所有管路配件已经安装连接（例如，进口/出口阀，取样阀，排水阀，CIP阀，排气阀，等） ☐ Sampling Valves 取样阀 ☐ CIP Ports CIP口 ☐ Draining Valves 排水阀 ☐ Air Release Valves 排气阀	☐
■ A flow meter or flow switch is installed and the electrical and data connection are complete. 流量计或流量开关已经安装，电源线和数据线已经连接。 ☐ If flow meter: 4 - 20 mA signal and Com wires are connected as instructed in this guide. 如果是流量计：4-20 mA信号线和Com线按照本指导已经连接。 ☐ If flow switch: 2 wires from the flow switch are connected as instructed in this guide. 如果是流量开关：流量开关的2根线按照本指导已经连接。 ☐ A 4 - 20 mA signal from the PLC is installed. 从PLC来的4-20 mA信号线已经连接	☐
■ The Controller connects is complete. All supporting features (e.g., General Alarm, External On/Off, etc.) and wiring were installed according to the Installation plan based on the instructions in this guide. 控制屏已经连接。根据安装计划所需的功能（例如，通用报警，远程开/关等）和布线已经按照本指导完成。	☐
■ All Ballast Module connections are complete. 镇流器模块已经连接。	☐
■ All Connection Box connections are complete. All supporting features (e.g., flow meter or flow switch, auto valves open/close) and wiring were installed as instructed in this guide. 所有接线盒连接完成。所需的功能（例如，流量计或流量开关，自动阀开/关）和布线已经按照本指导完成。	☐
■ For systems with **TRACS**, network connection was installed between **TRACS** the Controller. 对于配有TRACS的系统，TRACS和控制屏之间网络连接已经完成。	☐
■ **You are scheduling an electrician to be on site and available during the System commissioning (a must or the installation cannot be completed).** **系统调试过程中要求一个电工在现场待命（必须的，否则调试不能继续）。**	☐
■ To be sent to Atlantium with this checklist, attach photos of the following: 把这个清单发到安特蓝德公司，附以下照片： ☐ Atlantium Unit 安特蓝德设备 ☐ Ballast Modules, Controller and other components 整流器模块，控制屏和其它部件 ☐ Accessories (Flow meter or flow switch, CIP ports, Sampling valves, etc.) ☐ 辅件（流量计或流量开关、CIP口、取样阀等）	

Customer Approval

客户确认

Name of Customer's authorized representative:
客户授权代表姓名：
_____

Position:
职位：
_____

Signature of Customer's authorized representative:
客户授权代表签名：
_____

Date:
日期：
_____

First Time System Activation

系统激活

Following controller and optional TRAC Software configuration, completing the system setup includes the following major steps:

控制屏和可选TRAC软件中的设置，完成系统设置包括以下主要步骤：

Cleaning the Atlantium Unit (CIP - See below)

清洗安特蓝德设备（CIP -见下文）

Introducing Water into the Unit (See page 49)

向设备注水（见49页）

Igniting the Lamps (See page 49)

启动灯管（见49页）

Initiating the Water Flow (See page 50)

初始化流量设置（见50页）

System Tuning (See page 49)

系统校准（见49页）

Adjusting the Auxiliary Equipment (See page 52)

调节辅助设备（见52页）

Installation QA (Performed by an Atlantium technician)

安装质检（由安特蓝德技术人员完成）

Cleaning In Place (CIP)

现场清洗(CIP)

The CIP procedure consists of two parts:

CIP由2部分组成：

Cleaning to remove the accumulated particles that collect on the quartz tube over time

清洗去除石英套管上的累积颗粒

Disinfectant cleaning to sterilize the quartz tube (not applicable to some Municipal installations)

消毒剂清洗石英套管（不适用于某些市政设施）

Clean the Atlantium Unit's inner surfaces and quartz tube generally on a monthly basis. However, if the system performance is on target and the UVT Sensor readings are stable, you can clean using this process less frequently, depending on the specific chemistry of your water.

每月清洗安特蓝德设备的内表面和石英套管。如果系统的性能稳定并且UVT传感器读数稳定，你可以减少清洗频率，这取决于贵方水中的成分。

Atlantium systems are designed to treat water only. It is forbidden to use any chemical within the system that is not approved by Atlantium. **If caustic soda is a part of the CIP routine, the system must be bypassed during this stage.**

安特蓝德系统专用于处理水而设计。禁止使用未经安特蓝德公司同意的任何化学品。**如果烧碱是CIP流程的一部分，在这个流程必须经过旁通管路。**

A CIP recirculation system is available from Atlantium as an optional CIP Kit. Connect the recirculation system to the CIP ports to create a closed-loop flow line that pumps a diluted solution through the Unit.

安特蓝德可提供CIP循环系统，作为可选性CIP套件。连接循环系统与CIP端口，创建一个闭路管路，用于泵循环设备中的稀释溶液。

CIP Safety Devices

CIP安全装置

Required but not included in Atlantium's CIP Kits: protective devices such as goggles, clothing and gloves (chemical-safe) according to the specified safety standards at your facility.

要求配备但不包括在安特蓝德的CIP套件中的装备：根据厂区安全标准规定的保护装备如护目镜，衣物和手套（化学安全）。

Selecting the Correct Chemicals for CIP

为CIP选择正确的化学品

It is **critically important** to select the correct cleaning and disinfectant chemical for the CIP process. It must be powerful enough to clean the inner surfaces of the Atlantium unit, while at the same time:

为CIP流程选择正确的清洗和消毒化学品是**非常重要**。它必须能足够清洁的安特蓝德设备的内表面，同时：

Does not harm the components of the Unit that it comes into contact with (stainless steel 316, quartz and Viton® o-rings).

不损害设备的接触部件（不锈钢316，石英和氟橡胶Viton® O型圈）。

Does not contaminate the product for which the water being treated by the system is used.

不污染系统所处理的产品水。

- The chemicals selected and the concentrations used must be approved for use by the facility's quality assurance and safety officials, and must comply with the written protocols and procedures set in place by those departments.
  化学品的选择和浓度必须由厂区使用该设备的质检和安全员批准，必须遵守相关书面协议和流程。
- Use and handle in strict accordance with their manufacturer's instructions, product information sheets, and material safety data sheets (MSDS).
  严格按照生产商的指导、产品信息表和物料安全数据表（MSDS）使用和操作。
- It is strictly forbidden to use of NaOH (Caustic Soda) as it causes irreversible damage to the quartz. Any use of this material requires an analysis of temperatures, concentration, frequency and duration and written approval from Atlantium's application engineer.
  严禁使用氢氧化钠（烧碱），因为它会对石英造成不可逆的损伤。使用此材料要求分析温度、浓度、频率和持续时间，并得到安特蓝德应用工程师的书面许可。

All chemicals must be obtained locally.
所有化学品都从当地购买。
Atlantium does not supply chemicals - get them locally from commercial chemical suppliers.
安特蓝德公司不提供化学品，它们从本地营利性化学品供应商购买。

Recommended Cleaning Solutions

建议使用的清洗溶液

The following chemicals have been tested and found to be very effective for cleaning and are recommended for use when cleaning the Atlantium system:
推荐的以下产品已经进行了测试，清洗安特蓝德系统时非常有效：
Phosphoric acid (H3PO4) 2% diluted solution
磷酸（H3PO4）2%稀释液
Nitric acid (HNO3) 2% diluted solution
硝酸（HNO3）2%稀释液
HCl 2% diluted solution - recommended for metal based (rust-colored) deposits
盐酸2%稀溶液-推荐用于金属基（铁锈色）沉积物
Sulfamic acid (H_3NSO_3) 1.5% diluted solution - recommended for calcium based deposits
氨基磺酸（H_3NSO_3）1.5%稀释液-推荐用于钙质沉积物

Recommended Disinfectant Solutions

建议的消毒液

The following have been tested and found to be very effective for disinfection and are recommended for use when disinfecting the Atlantium system:
推荐的以下产品已经进行了测试，消毒安特蓝德系统时非常有效：
Peracetic acid-based chemicals - 30 min. contact time, for example:

P-3 Oxonia Active 150 - 0.5% diluted solution according to manufacturer's recommendation
Divosan Forte - 0.5% diluted solution according to manufacturer's recommendation

过氧乙酸-基本化学品- 30分钟，例如：

P-3 Oxonia Active 150 - 0.5%稀释溶液，根据生产商的建议
Divosan Forte -0.5%稀释溶液，根据生产商的建议

Hot water at 85°C (185°F) for 30 min.
85° C（185° F）热水30分钟。

The use of any other cleaning and disinfection chemicals requires Atlantium's approval.
任何其它的清洗和消毒化学品的使用需要安特蓝德公司许可。

DO NOT use caustic soda in the Atlantium system. If your facility uses caustic soda in a CIP process, use a by-pass line to prevent caustic soda contact with the Atlantium unit.
不得在安特蓝德系统使用烧碱。如果贵方的CIP过程使用烧碱，使用旁路管路防止烧碱接触安特蓝德设备。

Preparing the Chemical Solution

制备化学溶液

For both cleaning and disinfecting, the liquid in the reservoir must contain the desired percentage of the chemical additive (see above). Therefore, the purchased chemical solution must be diluted and added to the reservoir. Calculate the correct amount of chemical solution to be used for the CIP process.
无论是用于清洗还是消毒，水箱必须包含所需百分比浓度的化学品（见上面内容）。因此，购买的化学溶液必须稀释，并添加到水箱。计算正确的化学溶液浓度用于CIP。

- The concentrations refer to room temperature.
  所用浓度应考虑室温条件。
- The diluted solution values denote the required dilution of the chemical circulating through the Atlantium Unit.
  稀释溶液的浓度是指在安特蓝德设备中循环的浓度。
- While calculating the diluted volumes, consider all volumes including the Unit, pipes and the recirculation tank.*
  计算稀释浓度时要考虑包括设备在内管道和循环水箱的所有容积。*

To calculate the correct amount of chemical solution:
正确计算化学品溶液浓度：

Step 1. Calculate the total volume you need for the CIP* by adding the water volumes in:
步骤1. 计算所需CIP*的总容积，加入以下水量：

The Atlantium unit volume (measurements in liters/gallons) - Refer to the ***Physical Specifications*** Table in ***Atlantium System Footprint*** in the Atlantium User Manual or refer to the RS104 Unit ICD drawing.
安特蓝德设备容量（按公升/加仑计）—请参考《安特蓝德用户手册》的“安特蓝德系统尺寸”中 “物理规格”表或**RS104**设备ICD图。

The pipes between the Atlantium Unit and the Inlet and Outlet Valves
安特蓝德设备与进口和出口阀之间管道中的水量

The CIP recirculation system
CIP循环系统中的水量

The hoses between the Unit and the recirculation system
设备与循环系统连接软管中的水量

Step 2. Calculate the amount of chemical additive to be added to the reservoir to achieve the desired dilution. Use this formula:

步骤2. 计算需加入水箱的化学品得到所需的稀释溶液，使用以下公式：

$$C = \frac{A * V_t}{B}$$

A - The target concentration for the liquid (chemical substance + water) in %
溶液目标浓度（化学物质+水）（%）

B - The concentration of the chemical substance to be added in %
需加入的化学物质的浓度（%）

C - Volume of the chemical substance to be added in liters/gallons
需加入的化学物质的体积（公升/加仑）

V_t - Volume of the water in the Unit + piping + CIP Reservoir (as described above*) in liters
装置+管线+CIP水箱中水的容积（如上所述*）（公升）

* If you intend to collect the solution into the CIP reservoir or other container, the total volume of the cleaning solution must not exceed the volume of the CIP reservoir or container.
*如果贵方有意将溶液收集至CIP水箱或其他容器中，清洁溶液的总量必须得不超过CIP水箱或其他容器的容积。

Performing CIP

执行CIP流程

The estimated time for the CIP process is 1.5 hours. For detailed information on the CIP process, see ***Cleaning In Place (CIP)*** in the ***Maintenance*** section your Atlantium System User Manual.

预计CIP流程总耗时为1.5小时。欲获得更多相关信息，请参考贵方的《安特蓝德系统用户手册》中***维护***部分中的***现场清洗（CIP）***相关内容。

To Perform the CIP process: | CIP 流程执行步骤：

1. Close the Inlet and Outlet isolation valves.
   步骤1. 关闭进口及出口隔离阀；
   Step 2. Turn off the Atlantium system.
   步骤2. 关闭安特蓝德系统；
   Step 3. Calculate the chemicals for the Cleaning stage. (See above.)
   步骤3. 计算清洗阶段所用化学制品剂量（见上面内容）；
   Step 4. Fill the CIP reservoir.
   步骤4. 注满CIP水箱；
   Step 5. Connect the hoses.
   步骤5. 连接软管；
   Step 6. Turn on the pump for 30 min.
   步骤6. 将泵打开30分钟；
   Step 7. Turn off the pump and drain the pipes.
   步骤7. 关闭泵并排空管道；
   Step 8. Rinse with fresh water.
   步骤8. 用清水冲洗；

Step 9. Calculate the chemicals for the Disinfection stage. (See above.)
步骤9. 计算消毒阶段所需化学制品的剂量（见上面内容）；
Step 10. For the Disinfection stage, repeat **Steps 4** to **8**.
步骤10. 重复第4-8步操作；
Step 11. Turn on the Atlantium system.
步骤11. 打开安特蓝德系统
Step 12. Rinse with fresh water (For the Disinfection stage, rinse until no chemical traces are found in the pipeline). Via the viewport on the Atlantium Unit, verify that the pipes are filled with water and that the water does not have any air bubbles or air gaps.
步骤12. 用淡水冲洗（在消毒阶段，冲洗至管道中无化学制品残留）。通过安特蓝德设备上的观察孔，确认管道中已充满水，且水中无气泡或气隙。

Introducing Water for the First Time

第一次通水

The water is introduced into the unit before full activation.
在全面激活设备前将水注入设备。

Water hammer can cause damage to any hydraulic system, including the Atlantium Unit. **Make sure that water hammer is NOT present in your facility's water line.**
水锤现象可能对包括安特蓝德设备在内的流体系统造成损害。**请确保贵方厂区的水管中不会出现水锤现象。**
To prevent water hammer, consult your system engineer and check your facility system procedures, including:
为防止水锤现象，请向贵方的系统工程师咨询，并检查贵方厂区系统流程，确保以下几项：
When starting the water flow when the lines are empty, keep valves open so that the air in the pipes has a simple release pathway.
当在管道空的情况下启动水流时，先打开阀门，以便管内空气有一个简单的释放途径。
Sudden valve closures can cause water hammer. Make sure that valves close gradually enough to avoid this problem.
突然关闭阀门可能导致水锤现象。确保渐进式关闭阀门，以避免这一问题。
Ensure that all pumps that impact the Atlantium system employ soft start-up procedures.
确保所有对安特蓝德系统有影响的泵采用软启动。

To introduce water:
注水：

Open the **Inlet valve** and using the **Viewport** on the Unit, check that the quartz chamber fills with water completely.
打开**进口阀**，使用设备上的**观察窗**查看，确保石英腔体已充满水。

Igniting the Lamps for the First Time

第一次启动灯管

The lamps of the Atlantium Unit are ignited to commence live system operation.
启动安特蓝德设备的灯管以启动系统操作。

- **Use Caution floor signs at a distance of 1m/40inch from the Atlantium Unit that warn passersby against possible UV light exposure and not to approach without proper eye and skin protection.**
  在安特蓝德装置1米/40英寸远的地方放置“小心”警示牌，提醒过往人员有暴露在紫外线下的可能性，且在未配备适当的眼睛和皮肤保护装置的情况下不要靠近。
- Wear white cotton gloves.
  带白色棉手套
- Wear long sleeves rolled down to your wrist.
  带长至手腕的长护袖
- Where appropriate eye protection, such as containing polycarbonate lens that meet EN166, CAN/CSA-Z94.3-02 and/or Z87.1 standards.
  使用适当的眼保护装备，如配有聚碳酸酯镜片且符合EN166, CAN/CSA - Z94.3-02及/Z87.1标准的装置。
- **DO NOT look directly into openings that emit UV light.**
  不要直视紫外光释放口。

To ignite the lamps:
启动灯管：

Step 1. lace Caution floor signs at a distance of 1m/40inch from the Atlantium Unit that warn passersby against possible UV light exposure and not to approach without proper eye and skin protection.
步骤1. 在安特蓝德设备1米/40英寸远的地方放置“小心”警示牌，提醒过往人员有暴露在紫外线下的可能性， 且在未配备适当的眼睛和皮肤保护装置的情况下不要靠近。

Step 2. Open each of the lamp’s caps (2 on each side of a lamp). For the location of the lamps’ caps, see Figure **10-12** on page **16**.
步骤2. 打开每支灯管的灯帽（每支灯管两端各有2个）。灯帽的位置见第**16**页图**10-12**。

Step3. To ignite the lamps,, from the **Main Operations** screen, press the **Lamp Power** button. The button changes to white and the lamps are ignited.
步骤3. 在**主操作**界面上，按下灯管**启动**键，该键变成白色，灯管点亮。

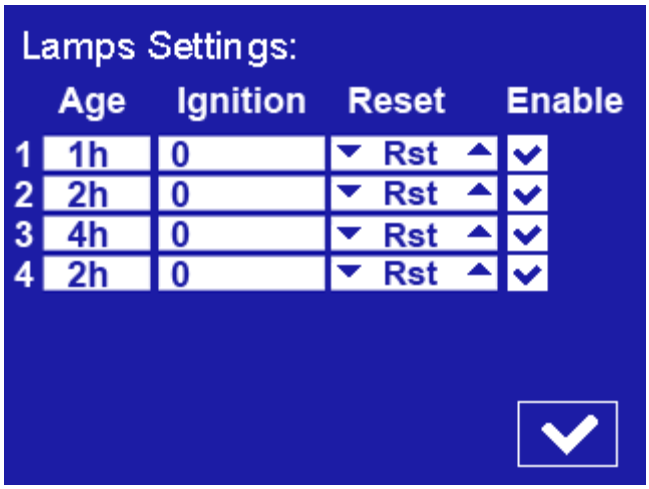

Figure 29: Lamp Settings Screen*
图29：灯管设置界面

Step 4. Let the system operate for at least one hour.
步骤4. 让系统运行至少1小时。

Step 5. Continue with the next section, ***Initiating the Water Flow*** and ***System Tuning*** below. There is no need to wait for the system to complete the first hour’s operation.
步骤5. 继续下文所述的“初始化流量设置”和“系统校准”内容。不需要等待系统完成第一个小时的运行。

Step 6. Close all of the lamps' caps.
步骤6. 盖上所有的灯帽。

Initiating the Water Flow

初始化流量设置

When initiating the water flow, the water may be set to drain out or collect in a tank until the system is fully operational. Once the entire installation and QA testing is complete, the water is set to flow normally as part of the facility operation.
在启动水流时，将水流设为排放或回流到水箱中，直到系统完全运行。当整体安装和QA测试完成完成之后，这些水作为设备运行的一部分正常流动。

To initiate the water flow:

启动水流：

Step 1. Open the relevant valve that allows water to flow through the Atlantium unit. This may be the draining valve or bypass valve.
步骤1. 打开相应的阀门，让水流经安特蓝德设备。可以是排水阀或旁通阀。

Step 2. **Open the viewport and verify that the Unit is completely filled with water and that no air gaps and no air bubbles exist.**
步骤2. **打开观察孔并确认设备已经充满水，且没有气隙或气泡存在。**

Step 3. From the **Main Operations** screen, press . The **Password** screen appears.
步骤3. 在**主界面**上，按下，出现**密码**界面。

Step 4. Using the numbered keys, enter the password (default password is **1357**) and press **OK**. The Settings screen appears.
步骤4. 使用数字密钥，输入密码（默认密码是**1357**），按下OK。出现设定界面。

Step 5. For **Flow**, press ▶. The Flow Settings screen appears.
步骤5. 设置**流量**，按下▶，流量设定界面出现。

Step 6. Verify that the Flow reading on the right is within normal range. If it is not, check the connections between the Atlantium system and the Flow meter. See ***Auxiliary Connections*** on page **34.**
步骤6. 确定右面的流量读数处于正常范围内。如果不是，检查安特蓝德系统与流量计之间的连接。参阅第 **34** 页的***连接辅件***。

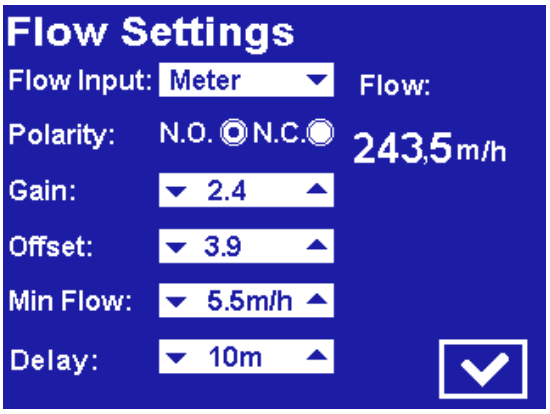

Figure 30: Flow Settings Screen
图30：流量设定界面

System Tuning

系统校准

The Atlantium system must be tuned via the **Controller**. Follow the instructions in the section, ***System Tuning*** in the Atlantium User Manual.

安特蓝德系统必须通过**控制屏**进行调试。按照《安特蓝德用户手册》中***系统校准***部分的指示进行。

Adjusting the Auxiliary Equipment

调节辅助设备

All relevant auxiliary equipment must be adjusted at this time, i.e., flow meter, automatic valves, PLC, etc. Refer to the manufacturers' user documentation of the relevant equipment.

所有相关的辅助设备必须在此时调整，即流量计、自动阀、PLC等。相关设备请参考制造商的用户手册。

If your configuration includes a flow meter, check that the value of the flow displayed on the **Controller** matches the reading on the flow meter. If they do not match, adjust the offset. See the section, ***Configuring the Flow Meter***, in the Atlantium User Manual.

如果用户的配置里包括流量计，检查**控制屏**上显示的流量值是否与流量计的读数一致。如果不一致，调整偏移量。见《安特蓝德用户手册》的***流量计设置***。

Basic Operations

基本操作

These basic operations are here to help you get started.

下面的基本操作规程可以帮你开始启动设备

Starting up the system (See below)

启动系统（见下文）

Shutting down the system (See below)

关闭系统（见下文）

Taking Microbial Samples (on page 54)

微生物取样（见第54页）

Starting up the Atlantium System

启动安特蓝德系统

You can start up the Unit via the **Controller** and then check the water and system parameters.

您可以通过**控制屏**启动设备，然后检查水流和系统参数。

➲ To start up the RS104 system:
启动安特蓝德 RS104 系统：

Step 1. Check that the electrical cabinet's power cable is connected to the main power source.

步骤1. 检查镇流器模块的电源线是否已经连接主电源。

Step 2. Lift all of the circuit breaker switches to the upper **(On)** position.

步骤2. 将所有断路器设置到**(On)**的位置；

The system powers up and the **Controller's** touch-screen monitor is activated, displaying the **Main Operation** screen. The **Lamp Power** button on the bottom left is on the **Off** position.

系统送电，控制屏启动后显示主界面。在底部左边的灯管电源按钮是关闭状态。

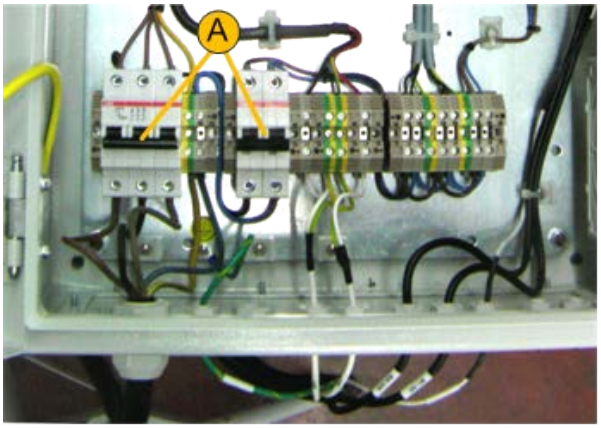

Figure 31: Electrical Cabinet Circuit Breakers
图31：电气柜断路器

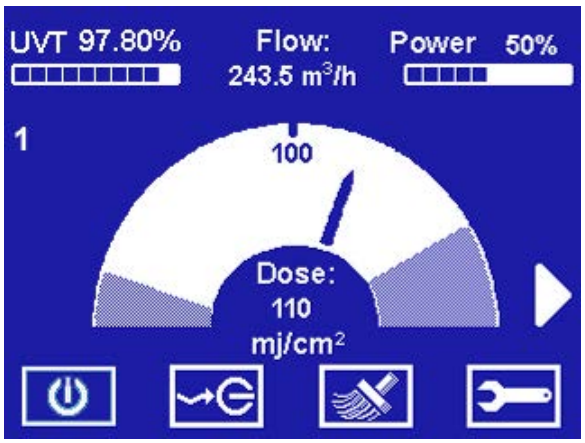

Figure 32: Initial Main Operation Screen
图32：初始界面

Shutting Down the Atlantium System

关闭安特蓝德系统

In a non-emergency situation, you can shut down the Atlantium system from either the **Controller** or (if included) **TRACS** (see the Atlantium User Manual). Be sure to enable the **Auto Power On** function in the **Controller** if you want the system to save your settings. (See the section, ***Activating the Lamps*** in the Atlantium User Manual.)

在非紧急状况下，用户可以从控制屏（见《安特蓝德用户手册》）关闭安特蓝德系统。如果 您希望系统保存设置，要确保控制屏的自动电源启动功能已经打开。（见《安特蓝德用户手册》-*激活紫外灯*）

Step 1. On the **Controller's** touch-screen monitor, the **Main Operation** screen is displayed. Touch the **Lamp Power** button on the bottom left. It turns blue which is the **Off** position.

步骤1. 在控制屏的主界面上，按下左下角的灯管电源按钮，按钮变成蓝色是**Off**状态。

Step 2. Lower all of the circuit breaker switches to the **Off** position.

步骤2. 所有断路器开关的**Off**位置。

Taking Microbial Samples

微生物取样

The designated aseptic sampling valves (i.e., EGMO ESV valves) are the **Inlet** and **Outlet Sampling Points** located on the sides of the Atlantium Unit. Before taking a microbial sample, a valve is sterilized internally with Ethanol 70%, as well as with flame.

无菌取样阀（如：EGMO ESV阀）设计安装在安特蓝德系统**进口**和**出口取样点**位置。在采集微生物水样前，先对阀门内壁用70%乙醇消毒，再用火焰。

Required Equipment

设备要求

Sampling containers that are clean, laboratory-grade, sampling bottles with a volume no less than 100ml (3.38oz).
取样容器需要洁净，实验室等级，取样瓶容量不小于100ml(3.38oz)。

Ethanol 100-70%
乙醇100-70%

Bunsen Burner and lighter
本生燃烧器和点火器

Permanent marker
记号笔

Sterile gloves
无菌手套

Proper Sampler attire according to local laboratory protocol
符合当地实验室标准的取样服装

Use gloves during sampling and treat them with Ethanol 70%.
在用70%乙醇处理它们取样时戴手套。

Use **sterile disposable** sampling containers.
使用**无菌一次性**取样容器。

Prevent contact between the sampling containers and the valves' surfaces.
预防取样容器与阀门表面接触。

Be sure that no foreign matter or liquids fall into the sampling containers.
确保无杂质或其它液体掉入取样容器。

Perform the sample collection as fast as possible to minimize environmental contamination of the sample.
尽可能快的取样防止周围环境的污染。

Use open flame to treat the surrounding air while sampling.
当取样时用明火处理周围空气。

To take a microbial sampling:
采集微生物水样：

Step 1. Open the Sampling valve and allow water to flow for 2-3 minutes. Then close the valve.

步骤1. 打开取样阀让水流2-3分钟。然后关掉阀门。

Step 2. If the sampling valve contains a cap at the top, open its cap and place it in a clear place.

步骤2. 如果取样阀上部盖有端盖，打开端盖后将其放在干净位置。

Step 3. Spray all over the Sampling valve and inside it thoroughly with Ethanol 70%.

步骤3. 用70%乙醇彻底喷淋取样阀和内部。

Figure 33: Cleaning the Sampling Valve with Ethanol
图33：用酒精清洗取样阀

Step 4. Spray the cap thoroughly with Ethanol 70% and place it on the Sampling valve.

步骤4. 用70%乙醇彻底喷淋取样阀护盖，然后将其盖到取样阀上。

Step 5. Using a Bunsen burner, apply the flame comprehensively over the entire Sampling valve surface from its connection to the main pipe to its spout.

步骤5. 用本生燃烧器，火焰完全地覆盖取样阀表面进行消毒，从主管道连接处到其取样口。

Step 6. Open the valve and allow the water to flow for 2 minutes. If you have applied the flame properly, vapor emerges from the spout. (If there is no vapor, application of the flame was insufficient. Repeat the previous step.)

步骤6. 打开阀门并让水流2分钟。如果已正确使用火焰，水汽会从管口处出现。（如果没有水汽，则使用火焰烧 了不充分。重复前述步骤。）

Make sure never to touch the opening at the Sampling container's neck.
确保绝不要碰触取样容器的颈部的开口。
While the Sampling container is open, do not turn the cap upside down.
当取样容器打开时，请勿将盖子上部朝下放置。

Step 7. On the Sampling container, with one hand, remove its cap carefully, avoiding touching the inside of the cap with fingers or any other object. **Do not turn the cap upside down.**

步骤7. 用一只手小心地打开取样容器的盖子，避免用手指或其它物质接触盖子内部。**切勿将盖子倒放。**

Step 8. With your other hand position the Sampling valve under the water stream and take a water sample. Make sure never to touch the valve's opening or the opening at the container's neck.

步骤8. 用另一只手在取样阀下部取水样。确保不接触阀门的出口或容器颈部的开口。用取样瓶取样时，取水样到瓶口留有适当的空间（至少2.5cm）。

Step9. Carefully replace the container's cap and tighten it to avoid cross contamination.

步骤9. 小心谨慎地盖上瓶盖并旋紧，避免交叉污染。

Figure 34: Taking a Sample
图34：取样

Step 10. Labeled the Sampling container with the following data:
步骤10. 用以下数据标签取样容器：
Sampling site
取样现场
Sampling point
取样点
Sampler name
水样名称
Step 11. Close the Sampling valve.
步骤11. 关闭取样阀。
Step 12. Spray the sampling container thoroughly with Ethanol 70%.
步骤12. 用70%的乙醇喷洒取样容器。
Step 13. If needed, store the water samples in a dark, refrigeration unit at a temperature of 2-8oC (35.6-46.4℉) until they are examined.
步骤13. 如需要，将水样存放在黑暗的冷藏箱内，温度保持在2-8℃（35.6-46.4℉）直到检测为止。
For guidelines on microbial analysis, see the Atlantium User Manual.
参阅《安特蓝德用户手册》，了解微生物分析指南。

Safety Overview

安全概述

The Atlantium **RS104** Hydro-Optic Water Disinfection system has been designed according to the highest safety standards, assuring the safety of operating personnel, the environment and the treated water.
安特蓝德**RS104**水光学消毒系统按照最高安全标准设计，确保操作人员、环境以及处理水的安全。

WARNING!

警告！

Improper use of controls or adjustments or performance of procedures other than those specified herein could result in significant hazards.
如果未按此或用户手册的规定进行控制、调整或实施程序，会导致严重危害。
Therefore, personnel operating or servicing this system must be thoroughly familiar with all safety requirements and operating procedures and are to adhere to them during use of this system.
因此，系统的操作人员或维修人员必须完全熟悉所有的安全要求和操作步骤，并应在系统使用时严格遵守这些要求和步骤。
To guard against injury, observe basic safety precautions, including the following:
为防止伤害发生，要遵守基本的安全预防：包括以下方面：
All persons operating the Atlantium system must be aware of proper use and the potential hazards of violating safeguards. Be certain that all personnel carefully review the safety information and the procedures specified in this manual. Only authorized individuals with appropriate training and knowledge, including local regulations, should operate, assist in the operation of or provide maintenance to the system.
安特蓝德系统的所有操作人员必须意识到不适当使用的危险。确保所有人员都认真复习了本手册内的安全信息和步骤。只有经过恰当培训并具有相关知识（包括地方规范）的授权人员，才能操作系统，在操作过程中提供帮助或维修系统。

All service and repair of the Atlantium system must be performed by Atlantium field service technicians or other factory-authorized personnel ONLY.
安特蓝德系统的所有维护和维修都必须且仅能由安特蓝德现场维修技术人员或其他工厂授权人员负责。

UV Lamp Safety

UV 灯管的安全信息

Refer the Chemical Safety information at: http://www.inchem.org/documents/icsc/icsc/eics0056.htm
参考化学品安全信息：http://www.inchem.org/documents/icsc/icsc/eics0056.htm

UV Exposure: The system generates ultraviolet (UV) light within the Unit, which can cause serious eye damage or blindness if you stare at it directly when it is working. Use the Viewport only. Do not look directly into the lamp enclosure during system operation, examining, or servicing the system's internal components during operation, or when lamp's caps are open, or if energized testing is required.

UV辐射：系统在设备内产生紫外线(UV)光，如果在系统运行时直视紫外光，会对眼睛产生严重伤害或导致失明。因此，只能使用观察孔进行观察。在系统运行、检查时，或在系统运行时对内部组件进行维修，或当灯帽打开时，或需要通电测试时，不要直视紫外灯。

If the viewport is broken, DO NOT look directly into it. Be sure to request a replacement part immediately. Do not open the viewport's metal cover until the replacement is installed.
如果观察孔破裂，不要直接查看。确保立即更换破损部件。在替换完成之前，不要打开观察孔的金属盖。

Persons potentially subject to UV light exposure – technicians who are servicing the Unit – must wear appropriate eye protection whenever the system is operating.
可能会受到UV辐射的人员，即维修系统的技术人员，在系统运行时，必须佩带适当的护目用具。

The Viewport is specifically designed with a UV filter to prevent UV light from escaping so it is safe to look inside. Nevertheless, personnel should not stare at it or any other brilliant light source for any but short intervals to check on Unit operations. The Viewport cover should also be preserved intact.
观察孔经特殊设计，带有UV滤光镜，避免UV光逃逸，因此从观察孔向系统内查看是安全的。尽管如此，在检查装置操作时，工作人员不能凝视紫外灯或其他明亮的光源，只能短间隔时间查看。观察窗的保护盖应保持完好。

During maintenance procedures that are conducted with the UV lamps turned on:
在需要UV灯打开进行维护的情况下，须满足以下条件：

- **Use Caution floor signs at a distance of 1m/40inch from the Atlantium Unit to warn passersby against possible UV light exposure and not to approach without proper eye and skin protection.**
  在距离安特蓝德装置1m/40 英尺的地方使用“注意”指示牌，警告路过人员避免可能的UV光辐照，未穿戴适当的护目用具和皮肤防护服的情况下不得靠近。
- Wear white cotton gloves.
  戴上白色棉手套；
- Wear long sleeves rolled down to your wrist.
  戴上长至手腕的长护袖；
- Wear appropriate eye protection, such as containing polycarbonate lens that meet EN166, CAN/CSA-Z94.3-02 and/or Z87.1 standards.
  带上适当的护目用具，比如带有符合EN166, CAN/CSA-Z94.3-02和/或Z87.1标准的聚碳酸酯镜片
- **DO NOT look directly into openings that emit UV light.**
  不要直视产生UV光的开口处。

Protect Hands: **Do not touch the UV lamp with bare hands.**

保护双手： **未带防护手套时不得触碰UV灯管。**

Wait at least 10 minutes until the lamp is cooled down before touching the lamp or starting the replacement procedure.

触碰灯管前，至少要等待10分钟让灯管冷却。

Use appropriate protective gloves both to protect your hands and to avoid skin oils that leave fingerprints and/or harm the UV lamp.

使用适当的防护手套，保护双手以及避免皮肤油脂留下指纹和/或损坏UV灯。

Lamps can reach a temperature of 1,000C° under operating conditions.

灯管在运行时温度可达1000℃。

Wait ten minutes to allow the lamp to cool down fully before replacing it.

更换灯管之前，至少要等待10分钟让灯管冷却。

Keep materials that are sensitive to heat, or which contain solvents, a safe distance away from the lamp, Unit, and electrical connections.

将热敏物品或含有溶剂的物品与灯管、设备和电气连接等保持安全距离。

Electric Shock: **Before replacing a UV lamp or other components, and during any maintenance requiring lamps to be turned off, make sure the switches on the Connection Boxes of the relevant lamps are turned OFF and place a sign on the Atlantium Unit and Controller alerting others NOT to touch the witches or the screen during maintenance so that no one can inadvertently turn it on while maintenance is in progress.**

电击： **在更换UV灯或其他配件之前，以及需要关闭UV灯进行维护时，确保镇流器上的开关已经关闭，并在相关的镇流器模块和控制屏上放置标志，警告其他人维修过程中不要碰触开关和触摸屏，这样在维修过程中不会有人无意中启动灯管。**

Prevent Damage: **Handle the UV lamp assembly by holding only the contact housings (white ceramic casing).**

避免损害： **拿UV灯管时只能接触灯管两端（白色陶瓷部分）。**

When handling the UV lamp, always place it on a flat surface or table, so that it is not accidentally damaged.

If the body of the UV lamp is touched accidentally, clean the fingerprints off with alcohol (at least 70%) and wipe dry with a soft, clean, lint-free cloth (usually provided with the lamp). Do not use cleaning rags or materials that can leave a residue.

拿UV灯管时，必须将灯管放在平坦表面或桌子上，这样避免意外损坏。如果不小心碰到了UV灯管的灯体，要用酒精（浓度至少为70%）清洁上面的指印，并用柔软、干净、无绒布（通常随灯管一起提供）擦拭干净。不要使用抹布或会留下残留物的材料。

Do not use a UV lamp that shows any scratches, cracks, or other damage.

不要使用带有任何划痕、裂纹或其他损坏的UV灯管。

Mercury Poisoning: **Lamps contain mercury, which is a hazardous substance. Always wear gloves and safety glasses when handling or replacing a UV lamp.**

水银中毒： **UV灯管中含有水银，这是一种有毒物质。在拿或更换UV灯管时，一定要佩戴防护手套和护目镜。**

Inhalation of vaporized mercury compounds can be harmful to the lungs, kidneys, and nervous system. Mercury that penetrates the skin or is ingested can also be harmful.

吸入汽化的水银化合物会对肺、肾、和神经系统造成伤害。水银渗入皮肤或摄入也对人体有害。

If mercury is inhaled, penetrates the skin, or is ingested accidentally, seek emergency medical treatment immediately.

如果意外吸入水银，或水银渗入皮肤或摄入，需立即寻求紧急救治。

If a UV lamp brakes during handling and releases mercury, the following precautions are to be observed to minimize the risk of exposure to mercury:

如果UV灯管爆裂并释放水银，应遵守以下预防措施以便尽可能减少受到水银伤害的可能性：

Always wear gloves and safety glasses when handling or replacing a UV lamp.

在拿或更换UV灯管时，必须戴好防护手套和安全防护眼镜。

Leave the area immediately to avoid inhalation of the mercury vapor.

立即离开该区域，以避免吸入水银蒸汽。

Thoroughly ventilate the area for at least 30 minutes or until the mercury vapor concentration is in compliance with applicable federal and local health and safety regulations.

对该区域充分通风，至少30分钟，直到水银蒸汽的浓度符合相应的联邦和地方安全健康规范。

After handling a broken UV lamp, carefully remove gloves, and then wash hands thoroughly with soap and water. Follow all applicable federal and local health, safety, and environmental regulations.

在拿破损或爆裂的UV灯管之后，小心摘掉手套，用肥皂和水仔细彻底地清洁双手。遵守所有适用的联邦和地方关于健康、安全和环境的规范。

Do not turn on or operate the system until all mercury contamination has been cleaned up and removed.

在所有水银污染物完全清洁并清除之前，不得打开或运行系统。

Establish a Hazard Response Plan to deal with all related hazards and provide it to all personnel associated with the Atlantium system.

制定危险应对方案，处理所有与安特蓝德系统相关人员的UV辐射和水银污染物状况。

Lamp Compatibility: Use original Atlantium UV lamps ONLY. **Other lamps are incompatible.** They **void the warranty** and may damage the system.

灯具兼容性： 只能使用安特蓝德的原配UV灯管。**其它的灯管与系统不兼容**，可能会损害系统，导致安特蓝德的**保修失效**。

Proper Disposal: **Expired lamps are classified as hazardous waste and must be disposed of appropriately.**

正确的废弃物处理： **无用的灯管归为危险废弃物，必须适当处理。**

- A non-ruptured UV lamp that is no longer used must be disposed of according to specific local or federal environmental and hazardous waste regulations.
  不再使用但没有破损的UV灯管处理必须准守特定的地方或联邦环境和危险废物法规。
- Broken lamps and parts contaminated by the mercury have to be vacuum-packed and disposed of. Broken lamps, as well as contaminated packing material and other parts have to be considered as special waste, which may only be removed by authorized waste disposal companies.
  破损的灯管以及受水银污染的部分必须用真空包装处理。破损灯管以及受污染的包装材料以及其它部分都应视为特殊废弃物。这些废弃物只能由授权的废弃物处理公司处理。

Electrical Hazards and Safety Considerations

电气危险和安全考虑

WARNING!!!

警告！

UNDER NO CIRCUMSTANCES

任何情况下

SHALL ELECTRICAL WORK BE CARRIED OUT WITHOUT VERIFYING THAT ALL MAIN CIRCUIT BREAKERS Of THE ELECTRICAL LINE FEEDING THE ATLANTIUM SYSTEM COMPONENTS ARE SET TO THE OFF POSITION AND THAT NO ELECTICAL FEED IS LIVE.

只有在确认安特蓝德系统进线电源的所有主断路器都处于**OFF**位置，系统没有电的情况下，才能进行电气工作。

DO NOT SET ANY MAIN CIRCUIT BREAKER OF THE ELECTRICAL LINES FEEDING THE ATLANTIUM SYSTEM COMPONENTS TO THE ON POSITION UNTIL ALL ELECTRICAL WIRING IS PROPERLY CONNECTED. UNCONNECTED WIRES/CABLES IN A LIVE ELECTRICAL FEED IS A HAZARDOUS SITUATION THAT CAN RESULT IN DEATH OR SERIOUS INJURY.

在所有电气线路连接妥当之前，不得将安特蓝德系统电源进线的任何主断路器设定到**ON**的位置。在通电情况下，未连接好的电线/电缆很危险，会造成死亡、或严重伤害等事故。

DO NOT DRILL INTO THE CONNECTION BOXES OR ALTER THEM IN ANY WAY!!!!

不得在接线盒上钻孔，或以任何方式对其进行改装！！！！

The Connection Box already contains entry glands for ALL of the cabling needs.

接线盒已经包含所需的所有格兰头，满足所有进线电缆需求。

Making holes in a Connection Box will destroy its waterproof seal, endangering the components inside.

在接线盒上钻孔将破坏其防水密封，危及内部的组件。

Do Not draw electricity from the Atlantium Unit's Connection Box as it will damage the Unit's electrical configuration.

不得从安特蓝德接线盒中引出电源线，因为这会破坏该系统的电气设置。

The Atlantium Hydro-Optic Water Disinfection system incorporates high-voltage internal components, which can cause serious injury or fatal electrical shock if not used or serviced properly. High voltage components can retain a charge for some period of time even after the system has been turned off.
安特蓝德水光消毒系统内部含有高电压元件，如果使用或维修不当，可能会导致严重的伤害或致命的电击。即使在系统关闭之后，高电压元件仍可能会在一定时间内保持电流。

- Never attempt to remove any system covers or to dismantle any parts, except when performing the maintenance procedures detailed in ***System Maintenance*** in the Atlantium User Manual.
  操作人员决不能试图卸掉系统的任何护盖或拆卸任何部件，除非是按照《安特蓝德用户手册》的***系统维护***中详细说明的 维修程序。
- No portion of the Atlantium system is be opened or removed by anyone other than a trained and authorized technician.
  除非经过培训和授权的技术人员，其他任何人都不得打开或拆卸安特蓝德系统的任何部分。
- Do not spray or pour any type of fluid directly into the Unit or electrical components. Moisture causes damage to the equipment and electrical shock may result.
  不得直接向设备或电气配件喷洒或倒入任何液体或直接将其浸入任何液体内，否则可能会导致设备损坏和 电击。
- Do not operate the system if the power cables or harnesses are frayed or otherwise damaged.
  如果电力电缆或线束磨损或损坏，不得运行系统。

DO NOT enter **Technician Mode** in the **Controller** unless instructed to do so by Atlantium certified personnel or by an Atlantium System User Manual. for a specific task.
除非安特蓝德授权人员指示或《安特蓝德系统用户手册》规定，否则**不得**进入**控制屏**的**技术员界面**。
If you are in Technician Mode, **DO NOT WALK AWAY!**
如果正处于技术人员界面，**不要离开!**
NEVER LEAVE THE ATLANTIIUM SYSTEM WHEN IT IS OPERATING IN TECHNICIAN MODE!!
任何时候都不得让安特蓝德系统在技术员界面模式下运行！！
A SYSTEM LEFT IN TECHNICIAN MODE WITHOUT SUPERVISION CAN RESULT IN PERMANENT DAMAGE!!
在无人监控状态下让系统处于技术员界面模式，可能会导致永久性损害！！

Utilize best practices regarding electrostatic discharge (ESD).
采用防静电放电(ESD)的最佳办法。
Avoid direct contact with the electronic circuit boards of the **Controller,** which is sensitive to electrostatic discharge (ESD).
避免直接接触**控制屏**的电子线路板，控制屏容易产生静电放电(ESD)。
Wear an electrostatic discharge (ESD) Wrist Strap when performing procedures where contact with a circuit board is possible.
在进行可能接触电路板的工作时，需佩戴静电放电(ESD)腕带。

Keep the Unit Full of Water

保持设备中充满水

The Atlantium system cannot be operated when there is no water. Any damage caused due to operating the system without water invalidates the Atlantium warranty.
安特蓝德系统在无水或无水流时不能运行。在无水或无水流状态下运行系统导致的任何损坏会导致安特蓝德的保修条款失效。

Chemical Use for Cleaning in Place (CIP)

现场清洗（CIP）的化学药品使用

The chemicals selected and the concentrations used must be approved by Atlantium's Application staff, and the facility's quality assurance and safety officials. The CIP process must comply with the written protocols and procedures set in place by those departments. Refer to the section, ***Selecting the Correct Chemicals for CIP*** on page **43**

所选化学品及使用浓度须得到厂区质量保证及安全工作相关负责人的批准，须遵从相关书面协议及相关部门规定的程序。CIP过程必须符合各部门制定的书面协议和程序。参阅第**43**页***为CIP选择正确的化学品***章节。

Use and handle all chemicals in strict accordance with their manufacturer's instructions, product information sheets, and material safety data sheets (MSDS).

严格按照生产商说明、产品信息表及物料安全数据表（MSDS）使用和处理化学品。

NaOH (Caustic Soda) as it causes irreversible damage to quartz. It is strictly forbidden to use it without a specific analysis of temperatures, concentration, frequency and duration and written approval from Atlantium's application engineer.

严格禁止使用NaOH（烧碱），因为它能对石英造成不可逆的损伤。无论何种情况，使用这种物质时需要对温度、浓度、频率及持续时间进行分析，并由安特蓝德应用工程师出具书面许可。

System Safety Features

系统安全特征

The Atlantium Hydro-Optic Water Disinfection system includes the following safety features:

安特蓝德水光学消毒系统包括以下安全特征:

UV Protective Seal

UV防护密封

Each lamp is enclosed within a sealed lamp chamber that prevents the UV light from escaping. This means that with proper operation there is no ambient UV escaping from the Unit. If, for any reason, UV light is escaping (if you see visible light leaking from the Unit), the Unit are to be serviced immediately.

每一支灯管都装在密封的腔体中，避免UV光在正常运行时逸出设备。这意味着只要操作正确，周围环境就不会有逸出的UV光。无论出于任何原因，如果有UV光从设备中逸出，应立即对设备进行维修。

Lamp On / Off Switch

灯管开 / 关

An On/Off switch is located on the Connection Box on top of the Atlantium Unit.
安特蓝德设备顶部的接线盒上有开关。
In the event of an emergency, as well as for maintenance purposes, each lamp can be shut down immediately by turning this switch to the Off position.
在紧急状况下以及维修时，可以将此开关拉至off位置，立即关闭独立的每一支灯管。
To restore operation, rotate the button clockwise and then the system restarts.
要重新启动运行，顺时针转动该按钮，然后系统重启。

Software Safety Controls

软件安全控制程序

When the system is started, the Atlantium software performs a series of internal self-testing routines prior to starting system operation.
当系统启动时，安特蓝德软件会在系统运行之前进行一系列的内部自检程序。
If the system **does not** pass these tests satisfactorily, UV lamp operation is disabled until the problem is resolved.
如果系统**未能**通过这些自检程序，在问题得到解决之前禁止UV灯管运行。
If problems arise during normal operation, appropriate error messages with varying levels of severity are generated on the touch-screen control panel and on the **TRACS** interface.
如果在正常运行过程中出现问题，在控制屏界面和**TRACS** 界面上会出现相应的错误信息，并标明严重程度。
Screens that provide setup options and compliance reports are password protected.
设置选项和合规报告的界面都有密码保护。

WARNING!

警告！

Technician mode has three levels of safety controls:
技术员模式有三级安全控制：
The Technician mode screens are password protected.
技术员模式的界面受密码保护。
After a short idle time, the Technician mode reverts to the main screen.
短时间后，技术员模式界面会自动返回主界面。
All changes in the Technician screens are logged and tracked in the Settings Report.
技术员模式界面中的所有更改都会在“设定报告”中进行记录和跟踪。
However, do not leave the Controller unattended while in Technician mode even for a short time. An untrained person could damage the operation of the Atlantium system from Technician mode.
处于技术员模式时，不得离开控制屏让其处于无人监控状态，即使很短时间也不行。未经培训人员在技术员模式界面操作会破坏安特蓝德系统的运行。

Atlantium Training

安特蓝德培训

As part of the Commissioning and Hand-Off process, Atlantium provides hands-on training on all aspects of the Atlantium system for your designated personnel. Atlantium offers training upgrades as needed and is ready to provide additional training for new personnel or any other needs related to its systems.

作为调试和移交工作的一部分内容，安特蓝德可为贵方指定人员提供关于其系统各个方面的操作培训。安特蓝德还可根据需要提供高级培训，并可为新员工提供附加培训或其它与此系统相关的培训。