Atlantium
Enlightened Water Technologies

UV Water Treatment
Atlantium Hydro-Optic™ Solutions

User Manual

Guide to the Atlantium Hydro-Optic UV System

Models RZB300-14

RZB300-15

Document No. PN92AB00E

March 2017

Copyright © 2017 Atlantium Technologies Ltd. All rights reserved.

Publication Catalog No. **PN92AB00E**, Revision **001**, March 2017

Controller software version: **BM4.xx** with EPA support

System and accessory specifications are subject to change without notice.

IMPORTANT NOTICE

It is strictly forbidden to alter/change the system hardware in any way.

Any change made without written permission from Atlantium shall void the warranty.

Atlantium and the Atlantium Logo are Trademarks and/or Registered Trademarks of Atlantium Technologies Ltd., its subsidiaries or affiliates in the United States and/or other countries. All other company or product names are the trademarks or registered trademarks of their respective holders. All rights not expressly granted are reserved.

The information contained in this document is proprietary and confidential information of Atlantium. Any unauthorized reproduction, use or disclosure of this material, or any part thereof, is strictly prohibited. This document and information is intended solely for authorized Atlantium customers as permitted by Atlantium and for the limited purposes set forth herein.

For more information, including contact details for your local Atlantium representative, please visit the Atlantium website at: www.atlantium.com

Validations and certifications completed:

Complies with UL 508 E113027

Revision History

Revision #	Description	Date
001	Full manual, based on the Preliminary version based on RZB300 series documentation.	July 2016
002	Updates to B&W Controller software.	Jan 2017
003	Additions to B&W Controller software.	Feb 2017

Table of Contents

1 Introduction 1
1.1 Before You Begin 3
1.2 Tags and Their Meaning 4
2 About the RZB300-14 and RZB300-15 Systems 1
2.1 The **RZB300-14 and RZB300-15** Unit 1
2.2 **RZB300-14 and RZB300-15** Interface Control Drawings 2
2.3 Atlantium System Footprint 2
2.4 The Ballast Module 3
2.5 Electrical Usage 4
2.5.1 Power Consumption and Local Voltage Requirements 4
2.6 Surge Protection 5
2.6.1 Surge Protector Devices 5
2.6.2 The OVPD Module 5
2.7 48VDC Module 5
2.8 The Controller 6
2.9 Environmental Requirements 6
2.10 Regulatory Compliance 7
3 Getting Ready for Installation 1
3.1 Planning 1
3.1.1 Access 1
3.1.2 Hydraulics 1
3.1.3 Flow Data 2
3.1.4 Application 2
3.2 Typical Installation Set-Up 2
3.3 Electrical Requirements 7
3.3.1 Typical Atlantium System Cabling Diagram 7
3.3.2 Preparing for the Electrical Wiring to the Mains 9
3.4 The Piping Infrastructure 11
3.5 Flow Measurement/Detection 11
3.6 Sampling Valve Components and Kits 12
3.7 Draining Valves 14
3.8 CIP Ports and CIP Kits 14
3.9 Connection to Facility Control 15
4 Safety Overview 1
4.1 UV Lamp Safety 1
4.2 Electrical Hazards and Safety Considerations 3
4.3 Keep the Unit Full of Water 4
4.4 Chemical Use for Cleaning in Place (CIP) 4
4.5 System Safety Features 4
4.5.1 UV Protective Seal 4
4.5.2 Lamp On/Off Switch 4
4.5.3 Software Safety Controls 5
4.6 Atlantium Training 5
5 Installing the Atlantium System 1
5.1 Installation Process Flow Diagram 1
5.2 Setting the Main Circuit Breakers to OFF Position 2
5.3 Unpacking And Checking Package Contents 2
5.4 Installing Sampling Points and CIP/Draining Ports 2
5.4.1 Installing the Inlet/Outlet Sampling Points 3
5.4.2 Installing the CIP/Draining Ports 4
5.5 Positioning the Atlantium Unit 5

5.5.1 Required Equipment 5
5.6 Installing Surge Protection 7
5.6.1 Installing a Surge Protection Device 7
5.6.2 Mounting and Connecting the OVPD Module 7
5.7 The Controller 8
5.7.1 Mounting the Controller 9
5.8 Mounting the 48VDC Module 9
5.9 Installing the Ballast Module(s) 11
5.10 Connecting the Ballast Module Cables 12
5.11 Cabling Components 13
5.11.1 Cabling Signal Components 14
5.11.2 Connection Box Card 1300 14
5.12 Controller Connections 16
5.12.1 External On/Off - Additional Notes 22
5.13 Modbus Communication Connections 22
5.13.1 Setting Up the Facility System Communication Properties 23
5.14 Connecting the Atlantium System to the Mains 23
5.14.1 Connecting the Controller's Power Cable 24
5.14.2 Connecting the 48VDC Module to the Mains 25
5.14.3 Connecting the Atlantium Unit's Power Cable 25
5.15 Installation Check List 26
6 Initializing the Atlantium System 1
7 Configuring the Controller 1
7.1 Accessing the Settings Screens 2
7.2 Setting the Atlantium System Configuration 3
7.3 Configuring the Signals Settings 5
7.4 Configuring the Flow Meter Settings 7
7.5 Configuring the Dose Settings 9
7.6 Resetting to Factory Defaults 10
7.7 Accessing the Android OS 11
8 First Time System Activation 1
8.1 Cleaning the Atlantium Unit 1
8.2 Introducing Water 1
8.3 Igniting the Lamps 1
8.4 Initiating the Water Flow 3
8.5 Adjusting the Auxiliary Equipment 3
8.6 System Tuning 3
8.7 Installation QA 3
9 Operating the Atlantium System 1
9.1 Operational Guidelines 1
9.2 Basic Operational Tasks 1
9.2.1 Shutting Down the Atlantium System 2
9.2.2 Starting up the Atlantium System 2
9.3 Viewing the Event Log 3
9.4 Viewing System Information 3
9.5 Taking Microbial Samples 4
9.5.1 Microbial Analysis Guidelines 6
10 System Maintenance 1
10.1 Walk-Around Inspection Tour 2
10.2 Cleaning In Place (CIP) 2
10.2.1 Selecting the Correct Chemicals for CIP 2
10.2.2 Preparing the Chemical Solution 4
10.2.3 Performing CIP 4
10.3 Checking the Cooling Fans 9
10.4 Checking the Temperature Sensors' Readings 9
10.5 Replacing a Lamp 10
10.6 Cleaning/Replacing the UV Intensity Wave Guide 17

10.7 Cleaning/Replacing the UV Intensity Sensor's Mirror 19
10.8 Cleaning/Replacing a Lamp's Quartz Tube and O-rings..... 20
10.9 Replacing/Checking a UVIS Sensor or UVT Analyzer 24
10.10 Testing System Lamps..... 25
10.11 System Tuning 26
10.12 Advance Maintenance 29
10.12.1 Replacing the Temperature Sensor 29
10.12.2 Replacing the Temperature Converter Card..... 30
Appendix A. Checking the System Parameters 1
Appendix B. Glossary of Terms 1

1 Introduction

Congratulations on purchasing an Atlantium **RZB300-14 and RZB300-15** Hydro-Optic UV Water Treatment System. This user guide provides you with clear guidelines for preparing the site for installation, correct installation and software configuration procedures, and a good understanding of all system functions for maximum benefit from your Atlantium Unit.

The Atlantium **RZB300-14 and RZB300-15** systems guarantee water bio-security at optimized energy efficiency, and meet EPA criteria for providing bio-security.

Atlantium systems are designed to provide applications for the following Industries:

- **Aquaculture**
- **Dairy**
- **Municipal**
- **Power Plants**
- **UPW**
- **Bio-Pharma**
- **Bottled Water**
- **Beverages**
- **Beer**
- **Aquariums**
- **and more**

Applications

- **Water Disinfection** - meets US EPA criteria for providing bio-security
- **Chlorine Replacement** - provides a chemical-free alternative to chlorine for treating source water. It easily inactivates microorganisms including those that are resistant to chlorine and heat.
- **Non-Thermal Pasteurization** - replaces energy-intensive heat pasteurization of water - meets US FDA criteria for pasteurized equivalent water,.
- **Post-Active Carbon** - protects against breakthroughs and reduces bio-fouling downstream. Significantly reduces the frequency of aggressive cleaning, and lengthens the lifespan of RO membranes
- **Dechlorination / Chlorine Destruction -** efficient, clean, non-chemical alternative to activated carbon filter or sodium bio-sulfite. Reduces risk, better protection, lower operating expenses.
- **Ozone Destruction –** efficient, cost-effective solution.
- **Ultrapure water (UPW)** - efficient, cost-effective solution that complies with the uncommonly stringent specifications for ***high-purity water.***
- And more.

Patented Innovative Technology

- Field proven worldwide, used by world-leading brands
- Based on Hydro-Optic engineering that optimizes UV efficiency and enables uniform dose distribution
- Medium Pressure High Intensity UV effective in cold & warm water, compromises microorganisms' repair mechanisms for long-term bio-security
- Guaranteed required dose for complete microbial inactivation.
- Sustainable operation provides the security and stability that the industry demands.
-

Guaranteed Dose Delivery

- Unique monitoring & control software assures that required UV dose is being delivered at all times.
- Dedicated UVIS sensors per lamp for real-time monitoring
- Automatically adjusts lamp power based on real-time analyses of critical parameters such as water flow rate, lamp intensity and water transmittance to UV (UVT).

- A user-friendly interface displays the monitored data in real-time including the actual delivered dose as well as the other critical parameters, so you can verify that you are actually getting the dose that you need.

Lower Electrical Consumption

- Fiber opticFiber optic and hydraulic principles applied to UV system design enables:
- Optimized UV power and uniform dose distribution.
- Efficient use of power, with lower electrical consumption than low or medium-pressure-based UV systems.

Minimum Down Time

- True in-line system.
- UV lamps securely positioned outside the water.
- Quick lamp replacement (4 minutes) and better safety.

Integrates with your Process Line

- Field proven installation.
- With no additional software, you can integrate the Atlantium system into your current process using Atlantium's customizable settings.

Regulatory Compliance

- Meets the most stringent regulatory criteria including FDA and EPA.
- Automatically generated reports at the push of ab button for proof of compliance and traceability.
- Provides validated minimum required dose and not average dose.

Efficiency and Easy Maintenance

- For total efficiency and dependable performance, the Atlantium system monitors the lamps for performance, assuring that a lamp is replaced only when absolutely needed.
- By following the easy preventive maintenance programs you keep the system working at peak performance.
- The **Viewport** allows you to safely peek at what's going on inside.

1.1 Before You Begin

Before you begin using this product, or any installation or service operation, please read the following safety information:

- Attention to these warnings helps prevent personal injuries and damage.
- It is your responsibility to use the product in an appropriate manner.
- This product is designed for use solely indoors.
- You are responsible if the product is used for other than its designated purpose or in disregard of Atlantium instructions. Atlantium shall assume no responsibility in any way for such use of the product.
- The product is used for its designated purpose if it is used in accordance with its product documentation and within its performance limits.
- Using the product requires technical skills. It is therefore essential that only skilled and specialized staff or thoroughly trained personnel be allowed to use the product.
- Keep the basic safety instructions and the product documentation in a safe place and pass them on to the users.
- Applicable local or national safety regulations and rules for the prevention of accidents must be observed at all times.

1.2 Tags and Their Meaning

The following indicators are used in the product documentation to warn the reader about risks and dangers.

Indicates a hazardous situation which, if not avoided, will result in death or serious injury.

Indicates the possibility of incorrect operation which can result in damage to the product.

Indicates a hazardous situation involving electricity which, if not avoided, can result in death or serious injury.

Indicates a hazardous situation involving Electrostatic Discharge (ESD), which, if not avoided, can result in damage to the product.

Indicates a hazardous situation involving UV light which, if not avoided, can result in death or serious injury.

Indicates a hazardous situation involving a hot surface which, if not avoided, can result in death or serious injury.

Indicates a hazardous situation involving working in an enclosure with moving parts, which if not avoided, can result in serious injury to the hands.

Indicates a hazardous situation involving poisonous material which, if not avoided, can result in death or serious injury.

Indicates a hazardous situation involving caustic chemicals which, if not avoided, can result in death or serious damage.

Indicates that components or equipment are heavy and care is to be taken to avoid lifting incorrectly. Incorrect lifting can be dangerous to the personnel lifting and may result in dropping and damaging the components or equipment.

Indicates that components or materials to be discarded are classified as hazardous waste and must be disposed of appropriately.

Indicates information related to installation, safety or use of system.

2 About the RZB300-14 and RZB300-15 Systems

This Atlantium **RZB300-14** and **RZB300-15** Hydro Optic Water Disinfection Systems includes a disinfection unit is a compilation of three units, one **RZ300-11** unit and two **RZ300-14** units. Each contain a dual-lamp lamp chamber construct, a Ballast Module/Plug-style configuration, and **Controller**. The quartz disinfection chamber takes advantage of ***Total Internal Reflection*** and reflects UV light back into the water to uniformly distribute the UV dose. Water flows unimpeded, resulting in low head-loss.

The specially designed short (Arc length 250mm/9.84 inch) MPHI lamps deliver a broad spectrum disinfection that irrevocably damages DNA and proteins in microorganisms. Housing Atlantium Quick Connect MPHI lamps within a thick quartz tube significantly reduces risk of breakage and its consequences. A UV Intensity Sensor (UVIS) provides continuous measurement of each lamp's output.

In addition, a UVT Analyzer reports and tracks the water quality and a UV-proof Viewport allows you to view the inner workings. An optional cleaning system cleans the surface of the quartz tubes automatically.

2.1 The RZB300-14 and RZB300-15 Unit

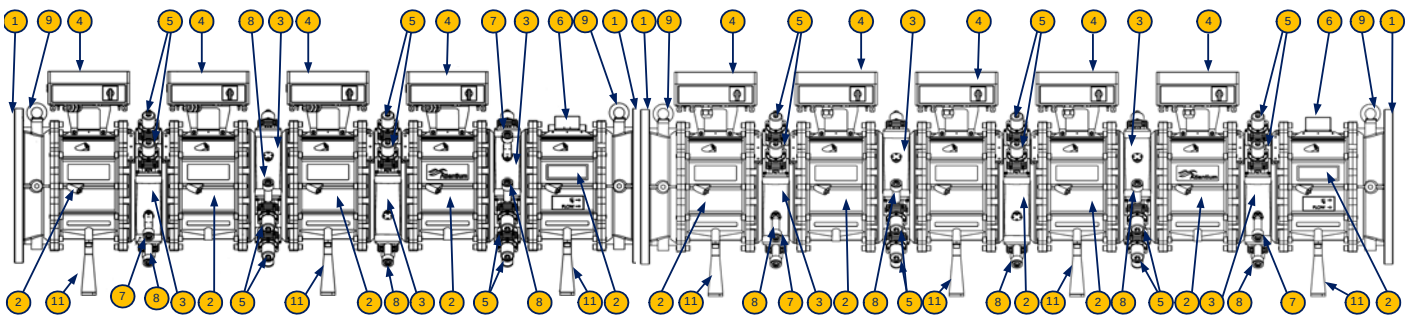

Figure 2-1: The **RZB300-14** and **RZB300-15** Unit

Table 2-1: Atlantium Unit Key

#	Item	Description
1	Flange or Ferrule interface	The unit connects to the facility piping via a flange interface as per customer order
2	Quartz Chamber	The quartz pipe in which the disinfection occurs
3	Lamp Chamber	The chamber that holds the lamp and optional Cleaning system
4	Connection Box	The box that sits on top of each lamp unit and holds the electrical circuitry
5	Lamp Arc length (mm / inch): Lamp total length (mm / inch):	Lamp encased in quartz tube assembly Medium Pressure High Intensity (MPHI) 250 / 9.84 417.8 / 16.5
6	Viewport	The UV-proof window to view the Unit working.
7	UVT Analyzer	The sensor that measures the UV transmittance through the water. Together with the UV Intensity sensor and the **Controller**, it analyzes, tracks and reports the water quality.

Table 2-1: Atlantium Unit Key

#	Item	Description
8	UV Intensity Sensor	The sensor that measures the UV intensity in the Lamp chamber and feeds it to the real time dose calculation.
10	Cleaning system	A sophisticated cleaning system for the quartz tube
11	Triangle Support Brackets	Brackets that are used to support and balance a unit anchored to customer supplied supports or surface that hold up the unit at least 750mm / 29.5inch above the floor (see ***RZB300-14 and RZB300-15 Interface Control Drawings*** on page 2-2).

2.2 RZB300-14 and RZB300-15 Interface Control Drawings

For the ICDs of the systems in the **RZB300-14 and RZB300-15**, consult the accompanying ICD files.

2.3 Atlantium System Footprint

The Atlantium system has a small, compact footprint that facilitates in-line installation in any process train.

Table 2-2: **RZB300-18** Physical Specifications

Item	
lamps **RZB300-14** **RZB300-15**	 4 5
Atlantium Unit Construction Materials: Casing: Quartz Chamber:	 Electro-polished stainless steel 316 High grade fused silica (Quartz)
Standard Pipe Flange Interface Options:	14” 150-lbs ANSI
Unit Length (mm / inch) **RZB300-14** **RZB300-15**	 1968.5 / 77.5 2343.2 / 92.25
Flange Inner ∅ Diameter (mm / inch)	355.6 / 14
Flange Outer ∅ Diameter (mm / inch)	533.4 / 21
Width at Widest Point (mm / inch):	533.4 / 21
Bolt Circle Diameter (mm / inch)	476.3 / 18.75
Bolt Hole Diameter (mm / inch)	28.4 / 1.12
Number of Bolts	12
Unit Volume (Liter / Gallon) **RZB300-14** **RZB300-15**	 127 / 33.5 149/ 39.4

Table 2-2: **RZB300-18** Physical Specifications

Item	
Weight (without water) (Kg / lb) **RZB300-14** **RZB300-15**	 361 / 795.8 424 / 935
Service Clearance on each side (mm / inch)	750 / 29.5
Minimum Height above Floor Level (mm / inch)	750 / 29.5
Maximum Working Pressure	7 Bars / 102 psi
Maximum Flow Rate	Application Dependent
Distance between Bolt Holes on Triangle Support Brackets (mm / inch) **RZB300-14** **RZB300-15**	 746 / 29.37 Inner: 373 / 14.69 Outer: 1865 / 73.43
Bracket Nut / Bolt Size (mm / inch)	13 / 0.5

2.4 The Ballast Module

Ballast Module/Plug-style is a water-proof easy plug-n-play box that contains the ballast power supply and related circuitry. Its convenient plugs make it easy to service. Its modular design makes it serviceable and flexible and easier to fit into an existing plant. A Ballast Module is supplied for each lamp in the Atlantium system. Its heat sink frame complies with industry standards and contains one cooling fan on the top. It can be mounted on the wall or other suitable anchoring point. The location of the Ballast Module/Plug-style must be designated according to the maximum distance needed for positioning the **Cable Harness** of the Atlantium Unit. The **Cable Harness** is **5m / 16.4'** (also available in **10m / 32.8'** length). For systems with more than one lamp, the Ballast Modules can be positioned one above the other or next to one another. The Ballast Module must have at least 300 mm (11.8 inches) of clearance on its right and left sides for proper ventilation and 300mm (11.8 inches) of clearance on the bottom for cable routing. For more details on mounting, see ***Installing the Ballast Module(s)*** on page **5-11**.

Table 2-3: Ballast Module Physical Details

Physical	Details
Dimensions (W x D x H) (mm/inch):	313 / 12.3 x 228 / 9.0 x 548 / 21.6 39 / 15.7 x 228 / 9.0 x 548 / 21.6
Weight (Kg/Lb):	22/ 48.5
Heat Load per Ballast Module: (For calculating space cooling requirements)	210W
Protection Category:	IP 56.

2.5 Electrical Usage

Utilize a Residual Current Device (RCD) that is Type A with 3000A surge resistance.

Atlantium recommends ABB P/N F204 A-xx/0.03 AP-R (xx represents the current rating according to the system load. Select the appropriate RCD accordingly. Calculating the value, takes into account the power consumption of the system (see the table in the section below) and the mains voltage of your locale.

The tables below detail the Atlantium Unit's electrical usage and power consumption.

Table 2-4: **RZB300-14 and RZB300-15** Unit Electrical Usage

Electrical	Details
Phase: Voltage:	3 phase 400/440/480 VAC per Ballast Module
Maximum allowed voltage tolerance:	±10% from the nominal voltage

2.5.1 Power Consumption and Local Voltage Requirements

The table below details the power consumption for the RZ300-18 per segment according to local voltage.

Table 2-5: **RZB300-11/12** Power Consumption

# of lamps :			2		
Nominal lamp power (kW):			8.4		
Cleaner type	**Feeding type**	**Feeding voltage (V)**	**Current consumption each phase (A)**	**Required circuit breaker**	**Required branch circuit breaker**
No cleaner	Direct	440	12.1	3x16A	-
		480	11.1	3x16A	-

Table 2-6: **RZB300-134** Power Consumption

# of lamps :			8		
Nominal lamp power (kW):			33.6		
Cleaner type	**Feeding type**	**Feeding voltage (V)**	**Current consumption each phase (A)**	**Required circuit breaker**	**Required branch circuit breaker**
No cleaner	Direct	440	48.4	3x63A	3x16A
		480	44.4	3x63A	3x16A

2.6 Surge Protection

Every Atlantium system **must** be protected by a device that prevents electrical surges and fluctuations from causing damage. There are three types of surge protection:

- UPS (Uninterruptable Power Supply) has an internal battery that allows the equipment plugged into it to continue to run in the event of a power outage until power is restored. It also has the benefit of performing the same functionality of surge protectors, protecting against spikes and surges. If needed, the UPS allows the system to be shut down cleanly if power is out for a lengthy period.
- Surge protection device protects your equipment from variations in electrical current, such as surges and spikes.
- OVPD module (Over Voltage Protection Device) - available from Atlantium. see below.

2.6.1 Surge Protector Devices

Surge protection devices are designed to protect industrial communication networks. This device recommended by Atlantium uses a combination of 3-electrode gas discharge tubes and fast clamping diodes. Typical applications include industrial processing equipment, transmission systems, I/O cards, probes, actuators, and displays. Surge protection devices are available via Atlantium.

Table 2-7: Surge Protector Details

Atlantium PN	DATA SHEETS	Module PN	Description
EP0002000	DOC002000	4983-DS277-404	SURGE PROTECTOR 440-480 3P 40KA
EP0002600	DOC002600	4983-DS120-402	SURGE PROTECTOR L + N, 115V
EP0002800	DOC002800	1352740000	SURGE PROTECTOR L + N, 230V

2.6.2 The OVPD Module

The Over Voltage Protection Device (OVPD Module) may be required in locations where fluctuations in the voltage may occur. If supplied, see the **OVPD Module ICD** accompanying the documentation. Consult your Atlantium representative.

2.7 48VDC Module

The **48VDC Module** is required for installations **with or without** the optional **Deposit Prevention Mechanism (DPM) Cleaning System** in localities with 440/480VAC **Electrical Power Distribution Systems**, such as, the USA and Mexico. The **48VDC Module** provides a 48VDC power feed to the Connection Box.

, The **48VDC Module** can be mounted on a wall or suitable anchoring point up to **10m / 32.8'**. from the Atlantium Unit. See the **48VDC Module ICD** accompanying the documentation.

Table 2-8: 48VDC Module Details

Physical	Details
Dimensions (W x D x H) (mm/inch):	300 / 11.8 x 150.7 / 5.9 x 400 / 15.75
Length with open door:	420.9 / 16.6
Minimum Clearance for Electrical Cables Routing:	5 0/ 2
Weight (Kg/Lb.):	10 / 22

Table 2-8: 48VDC Module Details

Physical	Details
Electrical	
Maximum Power Consumption:	Maximum 285W
Voltage: Incoming Outgoing	 200-500VAC 48V
Protection Category:	IP 56.

2.8 The Controller

The Atlantium system is monitored and controlled from a **Controller**. It can be mounted on a wall or suitable anchoring point up to 50 meters (164.04 ft.) from the Atlantium Unit. However, it should be located in a close proximity to the Atlantium Unit in a place that it is easy to reach the touch screen and read the monitoring information. See the **Controller ICD** accompanying the documentation.

2.9 Environmental Requirements

The Atlantium system should be situated indoors in an area that is adequately cooled and with sufficient air flow. However, there have been many successful Atlantium installations in less friendly environments. Consult your Atlantium representative to choose the most suitable location.

Table 2-9: **RZB300-14 and RZB300-15** System Environmental Details

Environmental	Details
Maximum ambient air temperature:	45°C (113°F)
Maximum ambient air temperature in the Ballast Modules environment:	45°C (113°F)
Maximum atmospheric relative humidity:	95%
Water Temperature: Maximum – high temperature: For water temperature above 70°C (160°F) consult with Atlantium service engineers Minimum – cold temperature:	 90°C(194°F) No limit

2.10 Regulatory Compliance

Atlantium Systems are designed to comply with the following regulatory standards:

- EMC directive 2004/108/EC
- European Low Voltage Directive (LVD), 2006 / 95 / EC for electrical safety
- Council Directive 98 / 83 / EC of 3 November 1998 for the quality of water intended for human consumption
- ISO 9001:2008 Quality Management Standard – Development, Design, Production and Sales of Water Disinfection Systems
- US Federal Performance Standards 40 CFR 141.720
- Long Term 2 Enhanced Surface Water Treatment Rule of January 5th, 2006
- All components have CE or UL 508 NRTL (MET) certification
- 3rd party validated by HDR/HydroQual, Inc.
- Resloucion exenta N° 2.327 del 31 de diciembre de 2010, en el marco de la Ley General de Pesca y Acuicultura
- GOST Standards Institute, Russian Federation
- National Institute of Public Health, Poland

3 Getting Ready for Installation

Using the guidelines and information in this section, you can prepare the piping and electrical setup for installing the Atlantium Hydro Optic Water Treatment System. If you have any questions, consult with an Atlantium application engineer.

3.1 Planning

Consider where to locate the unit from the perspective of your process. Prepare your installation plan according to the planning points below, as well as the other guidelines in this manual.

3.1.1 Access

- **Premises Access**
  - Take into account that sufficient door space is required to transport the Atlantium Unit into the facility where it is to be placed.
- **Service Access**
  - Take into consideration that sufficient space is required for maintenance personal to access the Atlantium Unit for periodic component replacement.

3.1.2 Hydraulics

- **Piping**
  - Align the upstream and downstream piping with the designated location for the Atlantium Unit.
  - Prepare the flanges/ferrules and piping as specified according to ***The Piping Infrastructure*** on page **3-11**. To avoid a step in the connection, make sure that the internal diameters where the Atlantium Unit and your piping match.
  - **Do not** use sealing material that contains graphite when sealing the flanges/ferrules and gaskets as it accelerates the corrosive process on stainless-steel components, including those of the Atlantium system.
- **Mechanics**
  - Prepare the supports needed for the Atlantium Unit, noting the minimum level above the floor is at least 750mm / 29.5 inch between the floor and the bottom of the provided triangle support brackets.
  - Check that the piping on the inlet and outlet sides has adequate support structures so that there are no mechanical stresses that may endanger the Unit.
  - Check the upstream and downstream piping for vibrations. Make sure that the piping to be attached to the Atlantium Unit is anchored and reinforced to protect the Unit against vibration. A high vibration level can cause damage to any hydraulic system, including the Atlantium unit. High vibration can be caused by an unbalanced pump or by sudden valve close.
- **Hydrodynamics**
  - Water hammer can cause damage to any hydraulic system, including the Atlantium Unit. Make sure that this phenomenon does not occur in your facility's water line. To prevent water hammer, consult your system engineer and check your facility system procedures, including:
    - When starting the water flow when the lines are empty, keep valves open so that the air in the pipes has a simple release pathway.
    - Sudden valve closures can cause water hammer. Make sure that valves close gradually, enough to avoid this problem.
    - Ensure that all pumps that impact the Atlantium system employ soft start-up procedures.
    - The Atlantium Unit must be totally filled with water. Assure that no air can be trapped in the unit and that air can be released. Verify through the Unit’s viewport after installation that there are no bubbles.

3.1.3 Flow Data

- Evaluate your flow trends to determine whether you require a flow meter or flow switch. If the flow varies, a **flow meter** is required to detect and report on the flow coming into the unit. Make sure that there are to be **no** branches on or off the pipes between the flow meter and the Unit inlet. If the flow rate is static, a **flow switch** can be used instead.

3.1.4 Application

- Verify that the dose-related parameters, such as the UVT and the flow, are the same as those defined in the Atlantium application scope of supply.
- Determine what a low flow situation means to your process and whether you need to shut down the Unit (low flow indicates upstream problems) or recirculate (low flow normal) when the flow goes below the normal range.

3.2 Typical Installation Set-Up

Use the diagram below as a basis for your installation drawings. Be sure to include service access as you fit the Atlantium system into your facility (i.e., nearby pipes, electrical fixtures, support beams, etc.)

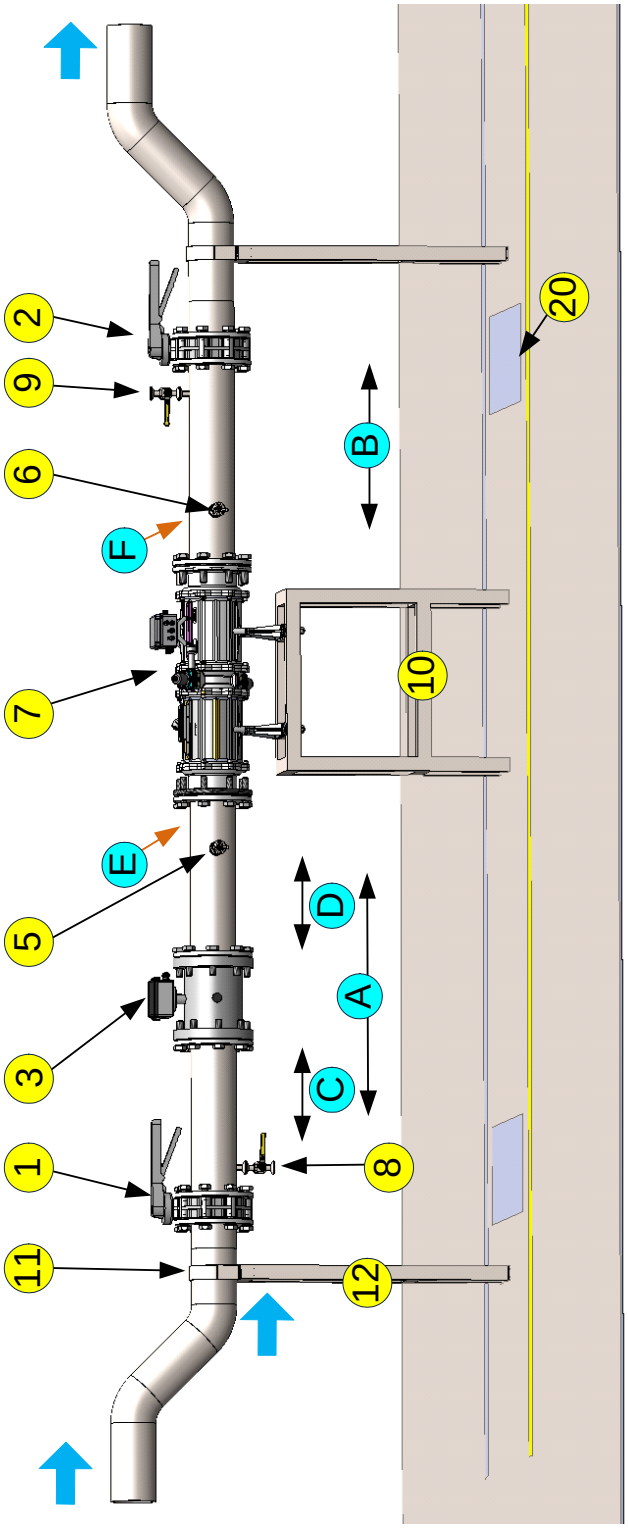

Figure 3-1: Typical Atlantium System Setup

Table 3-1: Typical Atlantium System Component Setup Key

#	Description		Atlantium P/N or recommended and available at Atlantium
	Direction of water flow in the pipes		-
1	Inlet isolation Valve ■ Isolating Valve on the Inlet side		-
2	Outlet isolation Valve ■ Isolating Valve on the Outlet side		-
3	■ Flow Meter flow measurement device with 4-20mA analogue output signal ■ To be installed on the same line as the Atlantium system, with no branching before or after the flow meter ■ Follow the manufacturer's Installation instructions	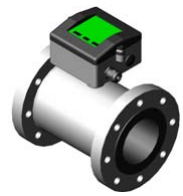	Available Flow Meters: KROHNE OPTIFLUX 6000 KROHNE OPTIFLUX 2300
4	Air Release valve - To prevent air bubbles where necessary ■ Automatic Air Release valve is used to release air bubbles trapped within the line ■ Install at a high position to allow air bubbles to accumulate and release from this point		-
5/6	Inlet/Outlet Sampling Points ■ Position aseptic sampling valves **horizontally** (90^0) on the pipe center, within 50cm of the Unit ■ Aseptic sampling valve must be a dedicated valve for sampling only and resistant to alcohol and flame		■ Aseptic Sampling Valve Kit for Stainless Steel Pipe - KTB005700 ■ Aseptic Sampling Valve Kit for Plastic Pipe - KTB0011500
7	Generic Atlantium Unit		-
8	Draining/CIP Port - For performing CIP on the Atlantium Unit ■ The Draining port should be positioned close to the Inlet valve and between that and the Unit, ***on the bottom*** of the pipe ■ It is also used as one of the CIP ports and connects to a hose		■ CIP Kit - SAB012900 ■ CIP Valve Kit for Stainless Steel - KT0011600 ■ CIP Valve Kit for Plastic - KT0011700 (the valve itself is not part of the kits) See ***CIP Ports and CIP Kits*** on page **3-14.**, for information on CIP equipment.
9	CIP Port - For performing CIP on the Atlantium Unit ■ The CIP port should be positioned between the Unit and the Outlet valve, ***on top*** of the pipe, at the ***highest*** point before the isolation valve, in order to allow the pipes to be completely filled with solution		

Table 3-1: Typical Atlantium System Component Setup Key

#	Description		Atlantium P/N or recommended and available at Atlantium
10	System Supports ■ Supports are required to assure no mechanical stress on the Atlantium Unit		-
11	Support brackets ■ Brackets are used to hold the Atlantium Unit and pipes attached to the support mounts ■ Is to include internal flexible material to absorb vibrations and assure that the pipes and Atlantium Unit are mounted tightly and securely		-
12	Pipe Supports ■ Pipe Supports are required to assure no vibrations in the pipeline	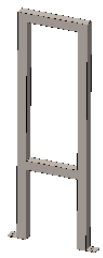	-
13	Water tank		-
14	Recirculation Line >5m3/h (>20gpm (Optional) ■ A Recirculation line is highly recommended to keep water flowing constantly, thereby assure a high disinfection level		-
15	Recirculation Line Isolation valve (Optional)		-
16	By-Pass (Optional) ■ If the facility uses quartz corrosive CIP chemicals, such as caustic soda, use a By-Pass line to prevent damage to the Atlantium Unit		-

Table 3-1: Typical Atlantium System Component Setup Key

#	Description		Atlantium P/N or recommended and available at Atlantium
17	By-Pass Inlet isolation Valve (Optional)		-
18	By-Pass Outlet isolation Valve (Optional)		-
19	By-pass draining port (Optional) ■ The Draining port should be positioned on the bypass line, at the lowest point of the pipe	 	-
20	Drain ■ It is recommended to install a drain close to the draining valve		-
21	Pump ■ To prevent water hammer, the pump must be able to start up gradually.		-

Table 3-2: Typical Atlantium System Distances Setup Key

#	Description
C	Some manufacturers require positioning the Flow Meter at a minimum of 5D (1500mm/59inch) of straight horizontal pipe immediately preceding it on the Inlet side. Refer to the manufacturer's instructions.
D	Some manufacturers require positioning the Flow Meter at a minimum of 2D (mm/inch) of straight horizontal pipe immediately following it before the Atlantium Unit. Refer to the manufacturer's instructions.
E	Position the Inlet Sampling Point Maximum Distance from the Atlantium System Inlet .5 meters/1.5ft.
F	Position the Outlet Sampling Point Maximum Distance from the Atlantium System Outlet .5 meters/1.5ft.

3.3 Electrical Requirements

The electrical infrastructure is to be installed and in place prior to the system's delivery.

For information on the footprint of the components of the Atlantium system, see the section, ***About the RZB300 Series Systems*** on page **2-1**. Use the diagrams below to help you plan the electrical infrastructure. See also ***Power Consumption and Local Voltage Requirements*** on page **2-5** and ***Connecting the Ballast Module Cables*** on page **5-12**.

Take into account:

- Evaluate the quality of your power and the likelihood of blackout/brownouts, electrical surges or interruptions. Determine if you need power surge protection and or uninterrupted power supply if any.
- To verify that you order the correct lengths for cables (i.e., Cable Harness, power cables, data cable, etc.), measure the distance between the proposed location of the relevant Atlantium components and between them and the Power source.
  - Planning the placement of the Ballast Modules, **Controller** and the path of the various cables must take into consideration the length of the **Cable Harness** and the other cables. Cables must be placed in a path that does not interfere with passage ways.
  - The power mains connections must be in the vicinity of the Ballast Modules, Controller.
  - The power cable and connecting plug are to be obtained locally.
- If your region experience periodic power outages, consider including uninterrupted surge protection devices.
- Prepare cables of sufficient length to connect from the auxiliary equipment (i.e., the flow meter/flow switch, etc.) to the Atlantium system.
- See ***Preparing for the Electrical Wiring to the Mains*** on page **3-9.**

For Systems Utilizing Saltwater

- The Atlantium Unit must be grounded. Be sure to prepare a ground point next to the designated location for the Atlantium Unit.
- Minimize the corrosion potential of the treated water by ensuring that there is sufficient grounding.

3.3.1 Typical Atlantium System Cabling Diagram

The following diagrams provide the typical Atlantium System Cabling schematics according to the local electricity options.

****** Each lamp chamber required a Connection Box and a Mains cable and each lamp requires a Ballast Module (with its own cable).***

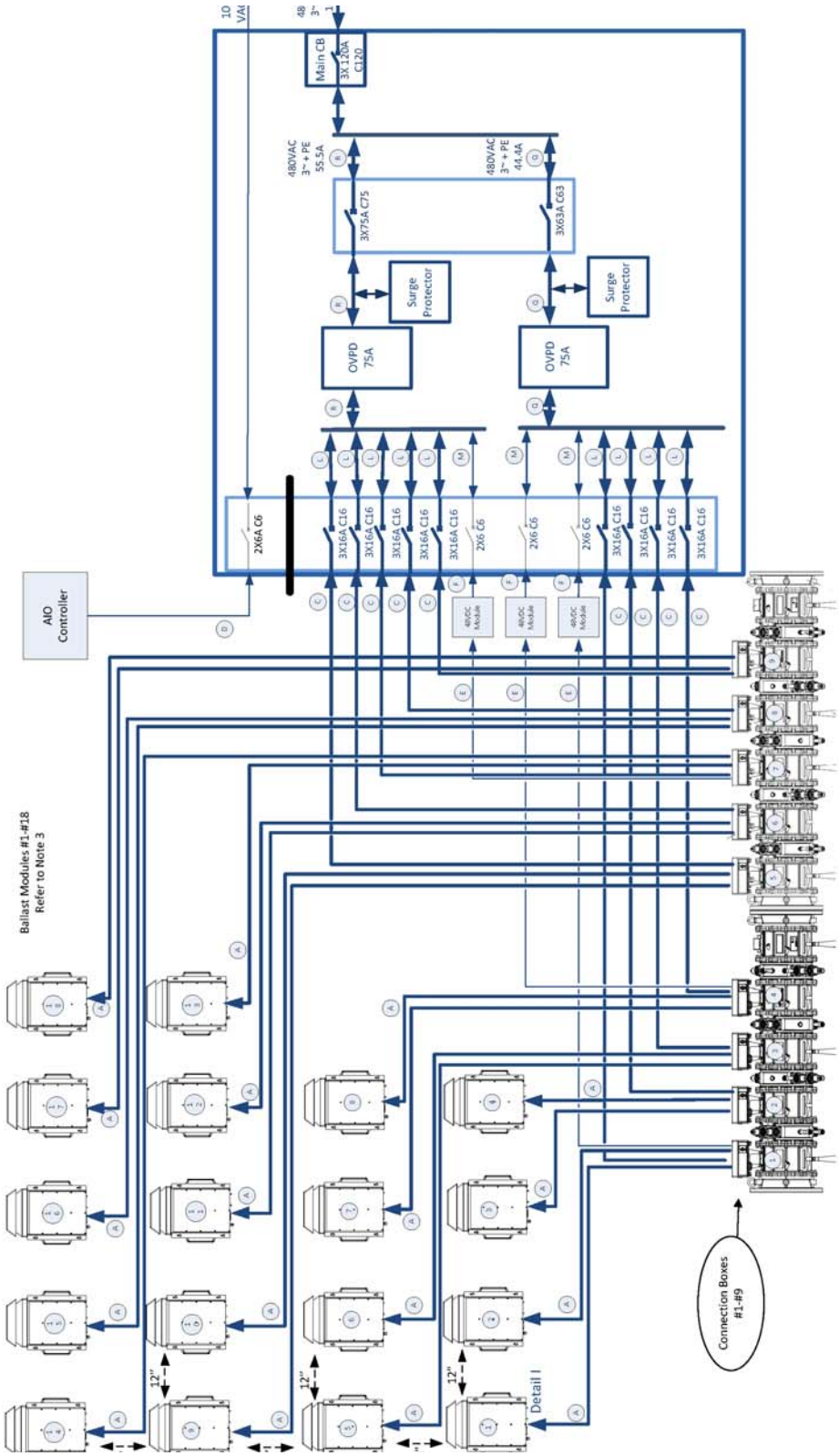

Figure 3-2: Typical Atlantium System Cabling Diagram for the **RZB300-14 and RZB300-15**

- The arrow at the end of each cable represents the end of cable that must be connected at that side to the specific component.
- The cable side without the arrow is supplied pre-connected to the unit.
- Ballast Modules 4.2 kW, each connects to a respective UV lamp via Connection Box on the UV unit.
- Routing the cables is to be performed by the customer and can be in trays, since some of the end connectors are too wide to be inserted into closed routing devices.

If you require longer cables than those Atlantium provides, or need to replace cables, the table below contains the specifications for all Atlantium system cables.

Table 3-3: Key to System Cables

	Item	Sizes	Cat. No.	Description	Diameter	Supplied by
A	Wiring Harness	5m/16.4ft. 10m/32.8ft.	HSL015500 HSL15400	Bundle	1.2 inch	Atlantium
C	Power Cable to the Mains	5m/16.4ft. 10m/32.8ft.	HSL013300 HSL014400	5-wire flexible cable of 4mm^2 each, 600V, HO7 RN-F 5x4 (Lapp, P/N 16001303)	0.9 inch	Atlantium
D	**Controller** Power Cable to the Mains	1.6m/5.3ft.	HSL011600	3-wire 16AWG + Shield flexible cable of 0.75mm^{2}each, 500V. HO5 RR-F 3G.075 (Lapp, P/N 600207)	0.5 inch	Atlantium
E	48VDC Module power cable	10m/32.8ft.	HSL015600	Power cable to the 48 VDC Module 2x1.0mm, 300V, HO5RR	0.4inch	Atlantium
F	48VDC Module power cable to the mains	2m/6.56ft.	HSL013800	3-wire 19AWG flexible cable of 0.75mm^{2}each, 600V. HO5 RR-F 3G.075	0.5 inch	Atlantium
L	Power Cable to the Mains, 4 Wires	Customer Determined		4-wire cable of 4mm^2 each, 600V	0.9 inch	Customer
M	Power Cable to the Mains, 3 Wires	Customer Determined		3-wire cable of 0.75mm^2 each, 600V	0.5 inch	Customer
Q	OVPD inlet and outlet power cables, 4 Wires	Customer Determined		4-wire cable of 10mm^2 each, 600V	1.5 inch	Customer
R	OVPD inlet and outlet power cables, 4 Wires	Customer Determined		4-wire cable of 4016mm^2 each, 600V	1.5 inch	Customer

3.3.2 Preparing for the Electrical Wiring to the Mains

You must prepare the following elements for connecting the Atlantium system to the mains:

- Mains system area circuit breaker according to the total systems' power consumption to be connected to this line. See ***Electrical Usage*** on page **2-5.**
- Plan to include an Over Voltage Protection Device (OVPD) (available from Atlantium) if needed. See ***The OVPD Module*** on page **2-6.**
- Circuit breakers per Atlantium system installed and terminal blocks for N, PE. See the diagrams below.
- If you intend to lengthen or replace the mains power cable connected to the Atlantium Unit with a longer cable, prepare the cables according to your location electrical distribution system requirements.

  For locations with 440/480 VAC: 4-wire system that contains 3 phases and Ground

Use the diagrams below as relevant for preparing for the connections to the Mains.

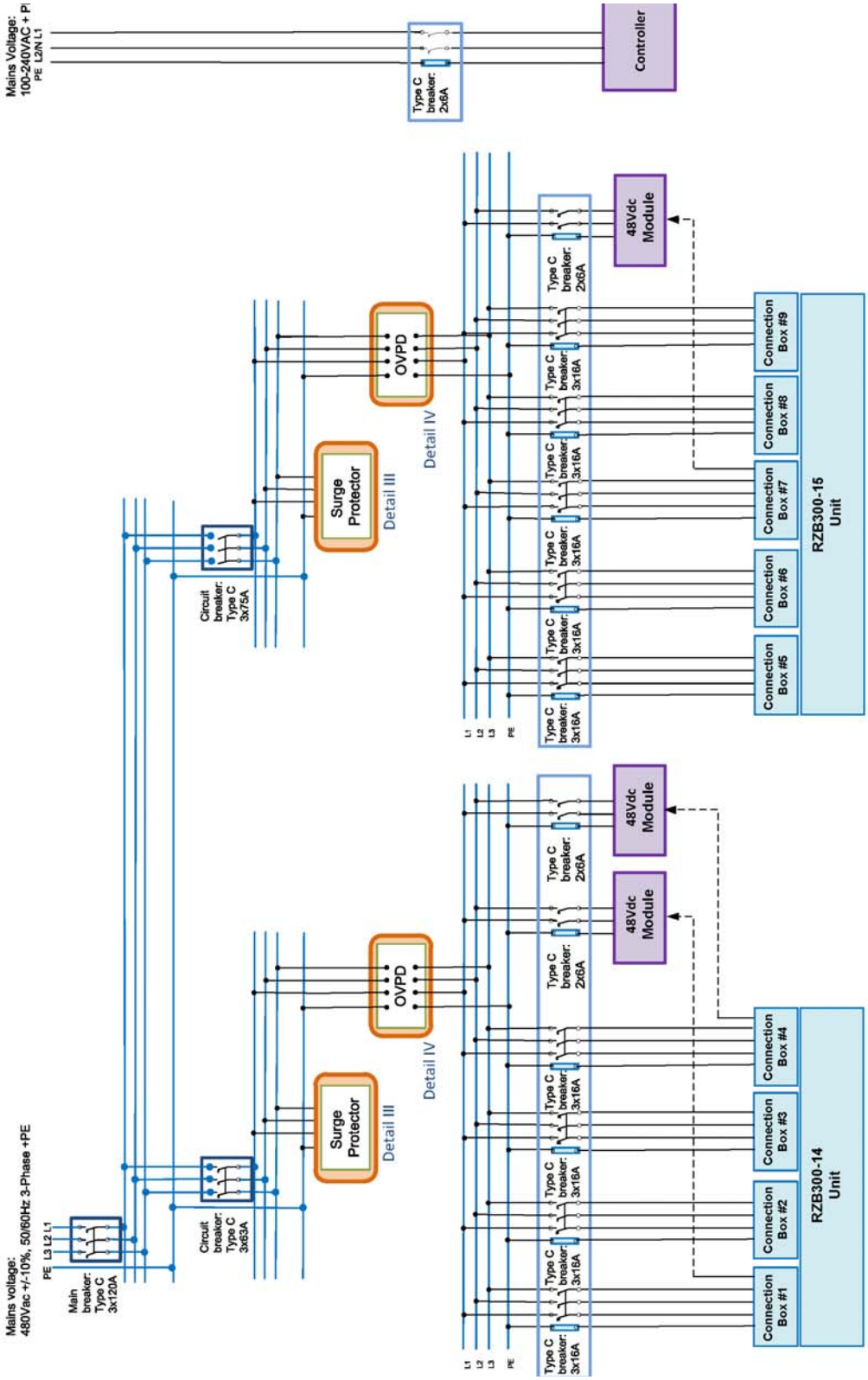

Figure 3-3: Typical Atlantium System **RZB300-14 and RZB300-15** Connections to the Mains

3.3.2.1 The Controller's Mains Cable

For areas with 400VAC, the voltage of the **Controller**'s Mains cable is 1 phase 120-240 VAC and can be connected to either **L1**, **L2**, or **L3**.

For areas with 440/480VAC, the Controller is connected to the mains on a separate line. Voltage option are:

- 1 phase x 120 - 240VAC +N +PE
- 2 phase x 120 - 240VAC +PE

3.4 The Piping Infrastructure

To review how to prepare the infrastructure, read through the typical installation section before you begin and refer to the section, ***About the RZB300 Series Systems*** on page **2-1**.

Install the piping infrastructure before the Atlantium system arrives, but to avoid built-in mechanical stresses perform the final pipe adaptations and welds when the unit is actually situated in its permanent position.

- When sealing the flanges/ferrules and gaskets, **do not** use sealing material that contains graphite as it accelerates the corrosive process on stainless-steel components, including those of the Atlantium system.
- Be sure to align the piping on the inlet and outlet sides of the designated location for the Atlantium Unit with the unit to avoid mechanical stress on the Unit.
- Be sure to secure the piping around the designated location for the Atlantium Unit so that there is no vibration.
- Be sure to position adequate supports on the piping line needed to hold up and stabilize the process piping on the inlet and outlet side of the proposed location of the Atlantium unit.
- Determination of support requirements and design should be made by an on-site mechanical engineer.

3.5 Flow Measurement / Detection

The Atlantium unit requires a flow signal to calculate the dose and operate properly. The flow signal is a measurement of the actual flow or simply a flow/no-flow indicator. The flow signal is collected from either a flow meter or a flow switch.

- A flow meter is required in facilities where the flow rate is variable for any reason.
- A Flow switch can be used in facilities where the flow is at a fixed, steady rate.

The Flow meter or flow switch does not necessarily have to be installed in close proximity to the Atlantium Unit. It may be more remotely positioned, provided that it is located on the inlet side between it and the Unit and there is **no** branching or splits of the water flow.

The Atlantium system cannot be operated when there is no water or no water flow. Any damage caused due to operating the system without water or without water flow invalidates the Atlantium warranty.

Flow Meter

In most cases, a flow meter with a 4-20 mA output is required to measure the flow and automatically adjust the output of the UV system. The flow meter must be able to measure the expected maximum water flow of the specified Atlantium unit. The power source for the flow meter must come from an external source according to the manufacturer's instructions.

Be sure to provide the power source for the flow meter as part of the preparations for installing the Atlantium Unit.

Install the flow meter in strict accordance with the instructions supplied by its manufacturer.

Flow meters are available from Atlantium, such as:

- **KROHNE OPTIFLUX 6000** flow meter for high-purity water applications
- **KROHNE OPTIFLUX 2300** flow meter – OPTIFLUX 2000 flow meter, includes **KROHNE IFC 300** signal converter

Consult your Atlantium representative.

OPTIFLUX 6000 **OPTIFLUX 2300**

Figure 3-4: KROHNE OPTIFLUX Flow Meters

Flow Switch

The flow switch tells the Atlantium Unit when water is or is not flowing. The recommended flow switch is Dry Contact with minimum flow sensing of 0.2m^3/hr (1gpm).

Install it in a vertical (12:00 o'clock) orientation on top of the pipe. Follow the manufacturer's instructions.

Figure 3-5: Examples of Flow Switch

3.6 Sampling Valve Components and Kits

Sampling valve kits are available from Atlantium. The table below details them. For information on installing the Sampling valves, see ***Installing the Inlet/Outlet Sampling Points*** on page **5-3**.

One Accessory kit is required for each Sampling point.

Table 3-4: Sampling Valve Components and Kits

Description	Image	Catalog number	Kit for Stainless Steel Pipe KTB005700	Kit for Plastic Pipe KTB0011500
Long welding ferrule – for welding the tri-clamp port to the pipe		FAC003700	X	-
Threaded Male Adapter 1/2" BSP – for connecting the tri clamp port to the plastic pipe		FAB008100	-	X
Aseptic sampling valve		COB000500	X	X
Gasket 1" – for sealing the valve connected to the pipe		FA0000046	X	X
Clamp 1.5" – for connecting the valve to the welded port		FA0000045	X	X
Gasket 1/2" – for sealing the valve's flushing port		FA0000048	X	X
Clamp 1/2" – for sealing the flushing port of the valve		FA00000047	X	X
End cap 1/2" – for covering the valve's flushing port		FA0000049	X	X
Round brush – for cleaning the valve during the process		FA0008300	X	X

3.7 Draining Valves

It is important to plan for draining the system. Install one draining valve at the lowest point of the pipeline, before or after the Atlantium unit. If you plan to install CIP ports, one of them can double as a draining valve. If there is a Bypass line used occasionally to bypass the Unit in any circumstance, add an additional draining valve to assure that the bypass line does become a potential source of standing water. A bypass line must be empty when not in use.

3.8 CIP Ports and CIP Kits

The CIP (Cleaning-In-Place) recirculation system is used for the periodic cleaning and sterilization process of the Atlantium unit's inner surfaces and quartz tube. The CIP Kit, catalog number: SAB012950, includes the CIP Cart with 100 liter (26.5 gallon) reservoir and a pump, capable of pumping up to 4 cubic meters per hour. It includes a supply hose: ID 0.75" / 19mm (5 meters / 15 feet long) and a return hose: ID 0.75" / 19mm (5 meters / 15 feet long) and pocket to hold these hoses. See the diagram below.

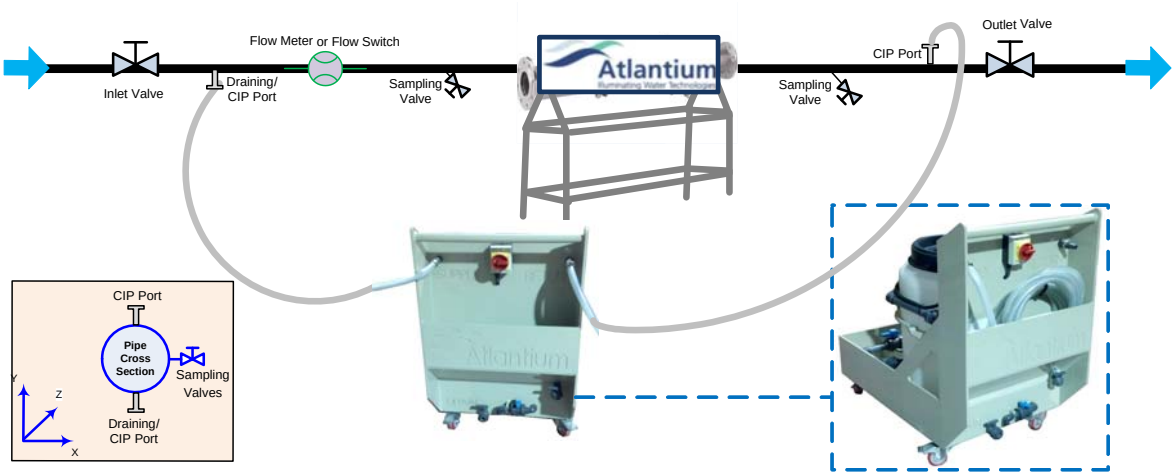

Figure 3-6: CIP Recirculation System Connections

CIP Accessories and Kits Available from Atlantium

One Accessory kit is required for each CIP port.

Table 3-5: CIP Accessory Kits

Description	Image	Catalog number	Kit for Stainless Steel Pipe KT0011600	Kit for Plastic Pipe KT0011700
Long welding ferrule – for welding the tri-clamp port to the pipe		FAC003700	X	-
Threaded Male Adapter 1/2" BSP – for connecting the tri clamp port to the plastic pipe		FAB008100	-	X

Table 3-5: CIP Accessory Kits

Description	Image	Catalog number	Kit for Stainless Steel Pipe KT0011600	Kit for Plastic Pipe KT0011700
Gasket 1" – for sealing the valve connected to the pipe		FA0000046	X	X
Hose Adaptor 1” - to attach the CIP hose		FAB005700	X	X
Clamp 1.5" – for connecting the valve to the welded port		FA0000045	X	X
End cap 1.5” – covering the CIP port while not in use		FAC004100	X	X

CIP Safety Devices

Required but not included in Atlantium's CIP Kits: protective devices such as goggles, clothing and gloves (chemical-safe) according to the specified safety standards at your facility.

3.9 Connection to Facility Control

Options are available to set up control of the Atlantium system via your facility control system. Control setup can be made via any of the following:

- **Modbus** - RTU on RS485 (network) serial connection directly to the Facility control (**Appendix A**, ***Modbus Communication Protocol***)
- **Signal control** - utilizing System Ready, External On/Off, and General Alarm functions, etc. (See ***Cabling Components*** on page **5-13.**)

With any of the above control options, you can still utilize the function of the **Controller** of the Atlantium system. Whichever control facility is utilized, the system communicates to the other control systems such that the last command issued determines the current status.

4 Safety Overview

The Atlantium **RZB300-14 and RZB300-15** Hydro-Optic Water Disinfection system has been designed according to the highest safety standards, assuring the safety of operating personnel, the environment and the treated water.

WARNING!

Improper use of controls or adjustments or performance of procedures other than those specified herein could result in significant hazards.

Therefore, personnel operating or servicing this system must be thoroughly familiar with all safety requirements and operating procedures and are to adhere to them during use of this system.

To guard against injury, observe basic safety precautions, including the following:

All persons operating the Atlantium system must be aware of proper use and the potential hazards of violating safeguards. Be certain that all personnel carefully review the safety information and the procedures specified in this manual. Only authorized individuals with appropriate training and knowledge, including local regulations, should operate, assist in the operation of or provide maintenance to the system.

All service and repair of the Atlantium system must be performed by Atlantium field service technicians or other factory-authorized personnel ONLY.

4.1 UV Lamp Safety

Refer the Chemical Safety information at: http://www.inchem.org/documents/icsc/icsc/eics0056.htm

UV Exposure: The system generates ultraviolet (UV) light within the Unit, which can cause serious eye damage or blindness if you stare at it directly when it is working. Use the Viewport only. Do not look directly into the lamp enclosure during system operation, examining, or servicing the system's internal components during operation, or when lamps's caps are open, or if energized testing is required.

If the viewport is broken, DO NOT look directly into it. Be sure to request a replacement part immediately. Do not open the viewport's metal cover until the replacement is installed.

Persons potentially subject to UV light exposure – technicians who are servicing the Unit – must wear appropriate eye protection whenever the system is operating.

The Viewport is specifically designed with a UV filter to prevent UV light from escaping so it is safe to look inside. Nevertheless, personnel should not stare at it or any other brilliant light source for any but short intervals to check on Unit operations. The Viewport cover should also be preserved intact.

During maintenance procedures that are conducted with the UV lamps turned on:

- **Use Caution floor signs at a distance of 1m/40inch from the Atlantium Unit to warn passersby against possible UV light exposure and not to approach without proper eye and skin protection.**
- Wear white cotton gloves.
- Wear long sleeves rolled down to your wrist.
- Wear appropriate eye protection, such as containing polycarbonate lens that meet EN166, CAN/CSA-Z94.3-02 and/ or Z87.1 standards.
- **DO NOT look directly into openings that emit UV light.**

Protect Hands: **Do not touch the UV lamp with bare hands.**

Wait at least 10 minutes until the lamp is cooled down before touching the lamp or starting the replacement procedure.

Use appropriate protective gloves both to protect your hands and to avoid skin oils that leave fingerprints and/or harm the UV lamp.

Lamps can reach a temperature of 1,000C° under operating conditions.

Wait ten minutes to allow the lamp to cool down fully before replacing it.

Keep materials that are sensitive to heat, or which contain solvents, a safe distance away from the lamp, Unit, and electrical connections.

Electric Shock: **Before replacing a UV lamp or other components, and during any maintenance requiring lamps to be turned off, make sure the switches on the Connection Boxes of the relevant lamps are turned OFF and place a sign on the Atlantium Unit and Controller alerting others NOT to touch the switches or the screen during maintenance so that no one can inadvertently turn it on while maintenance is in progress.**

Prevent Damage: **Handle the UV lamp assembly by holding only the contact housings (white ceramic casing).**

When handling the UV lamp, always place it on a flat surface or table, so that it is not accidentally damaged.

If the body of the UV lamp is touched accidentally, clean the fingerprints off with alcohol (at least 70%) and wipe dry with a soft, clean, lint-free cloth (usually provided with the lamp). Do not use cleaning rags or materials that can leave a residue.

Do not use a UV lamp that shows any scratches, cracks, or other damage.

Mercury Poisoning: **Lamps contain mercury, which is a hazardous substance. Always wear gloves and safety glasses when handling or replacing a UV lamp.**

Inhalation of vaporized mercury compounds can be harmful to the lungs, kidneys, and nervous system. Mercury that penetrates the skin or is ingested can also be harmful.

If mercury is inhaled, penetrates the skin, or is ingested accidentally, seek emergency medical treatment immediately.

If a UV lamp brakes during handling and releases mercury, the following precautions should be observed to minimize the risk of exposure to mercury:

- Always wear gloves and safety glasses when handling or replacing a UV lamp.
- Leave the area immediately to avoid inhalation of the mercury vapor.
- Thoroughly ventilate the area for at least 30 minutes or until the mercury vapor concentration is in compliance with applicable federal and local health and safety regulations.
- After handling a broken UV lamp, carefully remove gloves, and then wash hands thoroughly with soap and water. Follow all applicable federal and local health, safety, and environmental regulations.
- Do not turn on or operate the system until all mercury contamination has been cleaned up and removed.
- Establish a Hazard Response Plan to deal with all related hazards and provide it to all personnel associated with the Atlantium system.

Lamp Compatibility: Use original Atlantium UV lamps ONLY. **Other lamps are incompatible.** They **void the warranty** and may damage the system.

Proper Disposal: **Expired lamps are classified as hazardous waste and must be disposed of appropriately.**

- A non-ruptured UV lamp that is no longer used must be disposed of according to specific local or federal environmental and hazardous waste regulations.
- Broken lamps and parts contaminated by the mercury have to be vacuum-packed and disposed of. Broken lamps, as well as contaminated packing material and other parts have to be considered as special waste, which may only be removed by authorized waste disposal companies.

4.2 Electrical Hazards and Safety Considerations

WARNING!!!

UNDER NO CIRCUMSTANCES
SHALL ELECTRICAL WORK BE CARRIED OUT WITHOUT VERIFYING THAT ALL MAIN CIRCUIT BREAKERS Of THE ELECTRICAL LINE FEEDING THE ATLANTIUM SYSTEM COMPONENTS ARE SET TO THE OFF POSITION AND THAT NO ELECTICAL FEED IS LIVE.

DO NOT SET ANY MAIN CIRCUIT BREAKER OF THE ELECTRICAL LINES FEEDING THE ATLANTIUM SYSTEM COMPONENTS TO THE ON POSITION UNTIL ALL ELECTRICAL WIRING IS PROPERLY CONNECTED. UNCONNECTED WIRES/CABLES IN A LIVE ELECTRICAL FEED IS A HAZARDOUS SITUATION THAT CAN RESULT IN DEATH OR SERIOUS INJURY.

- **DO NOT DRILL INTO THE CONNECTION BOXES OR ALTER THEM IN ANY WAY!!!!**
- **The Connection Box already contains entry glands for ALL of the cabling needs.**
- **Making holes in a Connection Box will destroy its waterproof seal, endangering the components inside.**
- **Do Not draw electricity from the Atlantium Unit's Connection Box as it will damage the Unit's electrical configuration.**

The Atlantium Hydro-Optic Water Disinfection system incorporates high-voltage internal components, which can cause serious injury or fatal electrical shock if not used or serviced properly. High voltage components can retain a charge for some period of time even after the system has been turned off.

- Never attempt to remove any system covers or to dismantle any parts, except when performing the maintenance procedures detailed in ***System Maintenance*** on page 10-1.
- No portion of the Atlantium system is be opened or removed by anyone other than a trained and authorized technician.
- Do not spray or pour any type of fluid directly into the Unit or electrical components. Moisture causes damage to the equipment and electrical shock may result.
- Do not operate the system if the power cables or harnesses are frayed or otherwise damaged.

DO NOT enter **Technician Mode** in the **Controller** unless instructed to do so by Atlantium certified personnel or by an Atlantium System User Manual. for a specific task.
If you are in Technician Mode, **DO NOT WALK AWAY!**
NEVER LEAVE THE ATLANTIIUM SYSTEM WHEN IT IS OPERATING IN TECHNICIAN MODE!!
A SYSTEM LEFT IN TECHNICIAN MODE WITHOUT SUPERVISION CAN RESULT IN PERMANENT DAMAGE!!

Utilize best practices regarding electrostatic discharge (ESD).
Avoid direct contact with the electronic circuit boards of the **Controller,** which is sensitive to electrostatic discharge (ESD).
Wear an electrostatic discharge (ESD) Wrist Strap when performing procedures where contact with a circuit board is possible.

4.3 Keep the Unit Full of Water

The Atlantium system cannot be operated when there is no water. Any damage caused due to operating the system without water invalidates the Atlantium warranty.

4.4 Chemical Use for Cleaning in Place (CIP)

- The chemicals selected and the concentrations used must be approved by Atlantium's Application staff, and the facility's quality assurance and safety officials. The CIP process must comply with the written protocols and procedures set in place by those departments. Refer to the section, ***Selecting the Correct Chemicals for CIP*** on page **10-2**
- Use and handle all chemicals in strict accordance with their manufacturer's instructions, product information sheets, and material safety data sheets (MSDS).
- NaOH (Caustic Soda) as it causes irreversible damage to quartz. It is strictly forbidden to use it without a specific analysis of temperatures, concentration, frequency and duration and written approval from Atlantium's application engineer.

4.5 System Safety Features

The Atlantium Hydro-Optic Water Disinfection system includes the following safety features:

4.5.1 UV Protective Seal

Each lamp is enclosed within a sealed lamp chamber that prevents the UV light from escaping. This means that with proper operation there is no ambient UV escaping from the Unit. If, for any reason, UV light is escaping (if you see visible light leaking from the Unit), the Unit should be serviced immediately.

4.5.2 Lamp On/Off Switch

An On/Off switch is located on the Connection Box on top of the Atlantium Unit.
In the event of an emergency, as well as for maintenance purposes, each lamp can be shut down immediately by turning this switch to the Off position.
To restore operation, rotate the button clockwise and then the system restarts.

4.5.3 Software Safety Controls

When the system is started, the Atlantium software performs a series of internal self-testing routines prior to starting system operation.

If the system **does not** pass these tests satisfactorily, UV lamp operation is disabled until the problem is resolved.

If problems arise during normal operation, appropriate error messages with varying levels of severity are generated on the touch-screen control panel .

Screens that provide setup options and compliance reports are password protected.

WARNING!

Technician mode has these levels of safety controls:

- **The Technician mode screens are password protected.**
- **All changes in the Technician screens are logged and tracked in the Settings Report.**

However, do not leave the Controller unattended while in Technician mode even for a short time. An untrained person could damage the operation of the Atlantium system from Technician mode.

4.6 Atlantium Training

As part of the Commissioning and Hand-Off process, Atlantium provides hands-on training on all aspects of the Atlantium system for your designated personnel. Atlantium offers training upgrades as needed and is ready to provide additional training for new personnel or any other needs related to its systems.

5 Installing the Atlantium System

Installation overview:

Hardware setup to be implemented by your facility personnel:

Phase 1 Unpacking and checking the contents of the Atlantium system packaging (See below)

Phase 2 Installing Sampling valves and CIP ports (See page **5-2**)

Phase 3 Positioning the Atlantium Unit and connecting to the Piping Infrastructure (See page **5-5**)

Phase 4 Mounting the **Controller(s)**, Ballast Module(s), etc. (See page **5-7**)

Phase 5 Cabling the **Controller(s)**, Ballast Module(s), etc. (See page **5-12**)

Commissioning to be implemented by Atlantium personnel:

Phase 6 Starting up the system (See page **6-1**)

Phase 7 Configuring the **Controller** (See page **7-1**)

Phase 8 Tuning the System (See page **10-26**)

Phase 9 Completing the System Setup and Testing (See page **8-1**)

The Installation Process Flow diagram below maps out the installation process.

5.1 Installation Process Flow Diagram

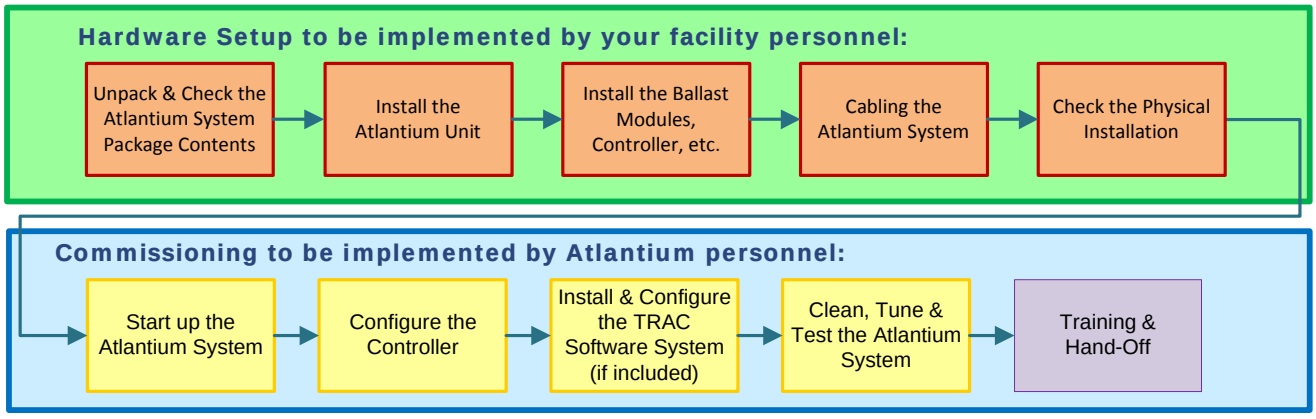

Figure 5-1: Installation Flow Diagram

5.2 Setting the Main Circuit Breakers to OFF Position

Before beginning work to connect the wires/cables of the Atlantium system components, turn the main circuit breakers of the electrical lines feeding

the Atlantium system components to the **OFF** position. **Verify that no electrical feed to the Atlantium system components is live.**

WARNING!!!

UNDER NO CIRCUMSTANCES SHALL ELECTRICAL WORK BE CARRIED OUT WITHOUT VERIFYING THAT ALL MAIN CIRCUIT BREAKERS OF THE ELECTRICAL LINES FEEDING THE ATLANTIUM SYSTEM COMPONENTS ARE SET TO THE OFF POSITION AND THAT NO ELECTICAL FEED IS LIVE.

DO NOT SET ANY MAIN CIRCUIT BREAKER OF THE ELECTRICAL LINES FEEDING THE ATLANTIUM SYSTEM COMPONENTS TO THE ON POSITION UNTIL ALL ELECTRICAL WIRING IS PROPERLY CONNECTED. UNCONNECTED WIRES/CABLES IN A LIVE ELECTRICAL FEED IS A HAZARDOUS SITUATION THAT CAN RESULT IN DEATH OR SERIOUS INJURY.

5.3 Unpacking And Checking Package Contents

The Atlantium system is packaged and shipped in specially packed crates that contain:

- The Atlantium Unit
- Ballast Module(s)
- Controller
- 48VDC Module
- OVPD Module (if included)
- Documentation
- Peripheral accessories as per your order and listed on your delivery documents are crated according to their size and weight. Small accessories may be crated together.

Each of the crates is connected to a forklift-friendly wooden pallet. The Atlantium crates must be lifted off the transport vehicle using a forklift or crane by a qualified operator.

➲ To unload and check the system:

Step 1. Using the forklift or crane, lift each of the crates off the transport vehicle and lower them to a level ground surface.

Step 2. Walk around and inspect each crate for damage. Note if there is any separation in the joints or any other indication of any damage in transit. If there is any indication of damage, take a photograph of it and use extra caution when proceeding to the next step.

Step 3. Unclamp and remove the panels of the crates.

Step 4. As you remove the wrapping and shipping protections, verify that the contents of the crates are correct according to the delivery documents. The Atlantium Unit contains a plate with the model number and other product information. Verify that the correct product version is supplied.

- Immediately report to Atlantium and to the insurance carrier any damage to the crates or to the Atlantium system found before opening the crates or during every step of unpacking, installing or testing of the system.
- If you ordered more than one Atlantium system, check the serial numbers against the delivery documents to verify which components comprise each individual system.

5.4 Installing Sampling Points and CIP/Draining Ports

Both the Sampling Points and CIP/Draining Ports must be installed on the inlet and outlet sides of the Atlantium Unit.

5.4.1 Installing the Inlet/Outlet Sampling Points

Aseptic sampling valves are to be located indoors in clean environment without away from direct contact with fan or A/C air flow. They each must be a dedicated valve for sampling only and resistant to alcohol and flame. For information on the Sampling valve's components, see ***Sampling Valve Components and Kits*** on page **3-14**. See ***Taking Microbial Samples*** on page **9-3.** for information on using the Sampling valves.

On the inlet and outlet sides of the water line, connect the aseptic sampling valves,

➲ To install an inlet/outlet sampling point:

Step 1. On the Inlet side, install the **Long welding ferrule** or **threaded male adapter (1).**

- Position aseptic sampling valves **(1 & 2** in **Figure 5-6** on page **5-4)** **horizontally** (90^0) on the pipe center, within 50cm of the Unit.
- **For Stainless Steel. Pipes:**
  - Weld the 1 inch **ferrule (1)** clamp fitting at a horizontal orientation (3 or 9 o'clock).
  - Perform a polishing process to achieve a smooth area on the external and internal part of the pipes.
  - Passivate the pipes to avoid corrosion.
- **For Plastic Pipes:**
  - Thread the **male adapter (1)** clamp fitting to the port.
- Repeat for the Outlet side sampling point.

Figure 5-2: Generic welded ferrule (Threaded male adapter is placed in the same position vis a vis the pipe)

Step 2. Fit the 1" gasket **(2)** into the **welding ferrule** or **threaded male adapter (1).**

Step 3. Fit the aseptic **sampling valve (4)** on over the gasket **(2).**

Step 4. Fit the clamp **(3)** around the aseptic **sampling valve (4)**/ gasket **(2)**/**welding ferrule** or **threaded male adapter (1)** and close and lock it.

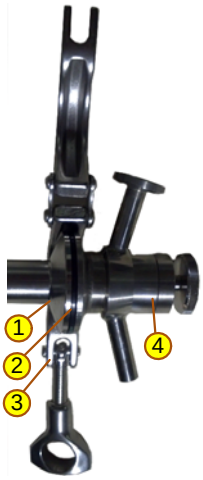

Figure 5-3: The clamp is placed around the aseptic **sampling valve** /gasket /**welding ferrule** or **threaded male adapter**

Closing Off the Aseptic Sampling Valve When Not in Use

Step 5. Into the spout of the sampling valve, fit the 1/2"gasket **(6)** and fit the cap **(7)** over it.

Step 6. Fit the 1/2" clamp **(5)** around the sampling valve spout/ gasket **(6)** /cap **(7)** and close and lock it.

Figure 5-4: The clamp is closed

Figure 5-5: The clamp is closed

5.4.2 Installing the CIP/Draining Ports

The CIP (Cleaning-In-Place) recirculation system is used for the periodic cleaning and sterilization process of the Atlantium unit's inner surfaces and quartz tube. For more information on performing CIP, see ***Cleaning In Place (CIP)*** on page 10-2.

A CIP KIT includes the CIP Cart with water reservoir and a pump, capable of pumping up to 4 cubic meters per hour. It includes a supply hose: ID 0.75" / 19mm (5 meters / 15 feet long) and a return hose: ID 0.75" / 19mm (5 meters / 15 feet long) and pocket to hold these hoses. See the diagram below.

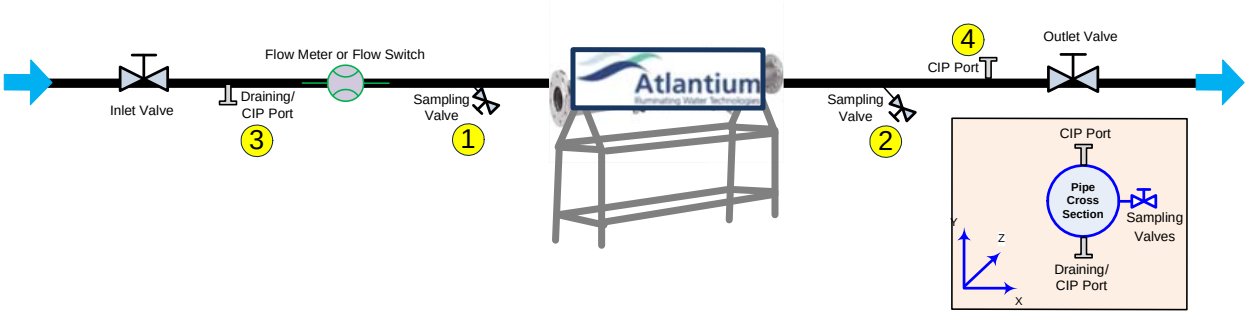

Figure 5-6: CIP Ports and Sampling Valves Orientation

Position the CIP/draining valves **(3 & 4)** on both the inlet and outlet sides of the Atlantium unit. To enable connection of the CIP kit, use high-quality, sanitary equipment, including a 1 inch tri-clamp/ferrule on both sides. A CIP/Draining valve is to be located 1D after the Inlet valve and 1D before the Outlet valve. When not using the CIP [ports. close the valve outlet using the tri-clamp cover.

➲ To install the CIP ports:

Step 1. Weld or thread the 1 inch ferrule at a vertical orientation:

For municipal applications, prepare 1" screw ports for the valves and insert the valves:

- **Draining Valve:** at a 6:00 o'clock orientation on one side of the Atlantium unit.
- **CIP Valve:** at a 12:00 o'clock orientation on other side of the Unit.

Figure 5-7: Generic welded ferrule (Threaded male adapter is placed in the same position vis a vis the pipe)

For all application except municipal:

- **For Stainless Steel. Pipes:**
  Weld the 1 inch clamp fittings:
  - **Draining port:** at a 6:00 o'clock orientation on one side of the Atlantium unit.
  - **CIP port:** at a 12:00 o'clock orientation on other side of the Unit.
  - Perform a polishing process to achieve a smooth area on the external and internal part of the pipes.
  - Passivate the pipes to avoid corrosion.
- **For Plastic Pipes:**
  - Thread the clamp the valve fittings to the port..

Closing Off the CIP/draining Ports When Not in Use

Step 2. Into the ferrule, fit the 1/2"gasket **(6)** and fit the cap **(7)** over it.

Step 3. Fit the 1/2" clamp **(5)** around the CIP port/ gasket **(6)** /cap **(7)** and close and lock it.

Figure 5-8: The clamp is closed

Figure 5-9: The clamp is placed around the CIP port /gasket /cap

Preparing the CIP Hoses

Step 4. On one end of a hose **(A)**, using an appropriate screwdriver, loosen the band **(C)**.

Step 5. Connect the hose to one of the adapters on the cart **(B)**. Push the hose up a far as you can.

Step 6. Using the screwdriver, tighten the band **(C)**.

Step 7. On the other end of a hose **(D)**, using an appropriate screwdriver, loosen the band **(F)**.

Step 8. Connect the hose to one of the hose adapters **(E)**. Push the hose up a far as you can.

Step 9. Using the screwdriver, tighten the band **(F)**.

Step 10. Repeat with the second hose to the adapter on the other side of the cart.

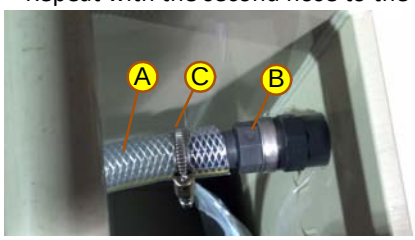

Figure 5-10: Hose Connection to One Side of Cart

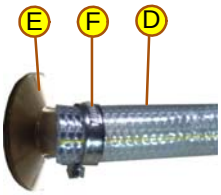

Figure 5-11: Hose Connection to Hose Adapter

5.5 Positioning the Atlantium Unit

Read through this typical installation section ***before*** you begin.

Make sure to use your installation drawing during this procedure. The Unit's triangle support brackets must rest on a strong, stable, level surface and anchor the Unit.Trace the path to be taken to position the Unit to its planned location and clear it of all obstacles.

Atlantium systems can be installed horizontally or vertically in your piping system. For a vertical installation, the Atlantium Unit can be positioned against a wall or on skids.

5.5.1 Required Equipment

Supply the following tools and equipment:

- Lift or crane
- Lifting strap
- Bolts, washers & lock washers
- Supports for inlet/outlet piping and for the Unit as shown on your installation plan

The Atlantium unit is heavy - refer to Table 2-3, ***Ballast Module Physical Details***, in **Section 2**, page 4. Two people are required to get the Atlantium Unit to the designated installation location - a qualified lift or crane operator, at least one other person to guide the Unit as it is transported, and others as needed.

➲ To position the Atlantium unit:

Step 1. Note the direction of the water flow that is to occur in the piping process into which you intend to place the Atlantium Unit and the Flow indicator marked on the unit. Use this information to decide at which angle to lift the Unit for transport. This is to help you to prepare for placing the Unit at the location.

Step 2. To lift the Unit from its packing crate, loop a lifting strap through the lifting support rings **(1)** at the end fittings on each side of the **U**nit.

Step 3. Join the straps together with a third central strap that is being connected to the lift or crane**.**

Figure 5-12: Lifting Strap Locations

Step 4. Ensure that all straps are connected securely to the Unit, to each other and to the lift/crane.

Step 5. Using the lift/crane, lift the Unit by the straps, out of the crate and position it for safe transport (near-ground level is preferred).

Step 6. Using the lift/crane and the designated person to guide, carry the Unit to its intended location.

Step 7. Install the Atlantium Unit:

Horizontal Installation

a At the designated location, check the installation plan, including the distances between the triangle support brackets.

b Position the customer-provided supports /surface so that the Unit's triangle support brackets are at least 750mm / 29.5 inch above the floor. (Refer to ***RZ163 Systems' Interface Control Drawings*** provided by Atlantium.)

c Carefully lower the Unit to its position.

d Using the appropriate bolts, washers and lock washers, bolt the triangle support brackets to the customer-provided corresponding supports.

Vertical Installation

a Position the Atlantium Unit vertically so that the Flow label is point in up To verify if the position is correct, check that the **RZB300** Unit is positioned so that the view port is on the **top** end:

b Position the Unit's triangle support brackets against the wall or skids.

c Carefully lower the Unit and using the appropriate bolts, washers and lock washers, bolt the triangle support brackets to the customer-provided corresponding supports.

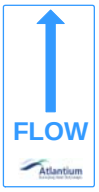

Figure 5-13: Flow Label Points Up

Step 8. To connect the fitting on one side of the Unit to the fittings of the facility's pipes, insert an o-ring between the Unit's and the facility's pipes. In some cases, a reducer or expander may be necessary.

Step 9. Repeat the step above for the other side of the Unit.

Step 10. Tighten the fastening hardware so that the torque pressure around the fittings is even, and the Unit is firmly connected to the facility's water line.

Step 11. To check for any leakage, open the Inlet and Outlet valves to allow water to flow through the newly installed Unit and its surrounding process piping.

Step 12. If you find any leakage, tighten the connections.

Step 13. Close the Inlet and Outlet valves and use the Draining valve, drain the Atlantium system piping from Inlet valve to Outlet valve.

Figure 5-14: Generic Flange fitting to the Water Line

5.6 Installing Surge Protection

Verify that you have a protective device that prevents electrical surges and fluctuations from causing damage. You must have at least on of these three types of surge protection:

- UPS (Uninterruptable Power Supply) has an internal battery that allows the equipment plugged into it to continue to run in the event of a power outage until power is restored. It also has the benefit of performing the same functionality of surge protectors, protecting against spikes and surges. If needed, the UPS allows the system to be shut down cleanly if power is out for a lengthy period.
- Surge protection device protects your equipment from variations in electrical current, such as surges and spikes.
- OVPD module (Over Voltage Protection Device) - if you have purchased this from Atlantium, see below for directions on mounting and connection it.

5.6.1 Installing a Surge Protection Device

The diagram to the right shows the generic wiring for a surge protection device. See the manufacturer's installation instructions with the surge protection device to be installed. For more information about surge protection devices available via Atlantium, see ***Surge Protector Devices*** on page **2-6**.

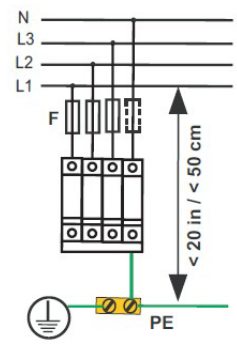

Figure 5-15: Surge protection device wiring - generic

5.6.2 Mounting and Connecting the OVPD Module

If your system includes the OVPD Module, mount it in an appropriate location in your electric box and connect it according to the directions in this section.

➲ To connect the OVPD

Step 1. To connect the mains to the OVPD module, thread the mains cables (customer provided) through the openings at the bottom of the OVPD module **(B)** and connect them to the terminal block for the mains **(C)** according to the diagram below.

Step 2. To connect the cables coming from the circuit breaker before the Atlantium Unit, thread the cables through the opening at the top of the OVPD module **(A)** and connect them to the terminal block for these cables **(D)** according to the diagram below.

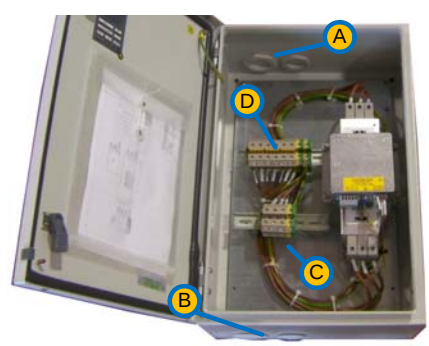

Figure 5-16: OVPD Connections

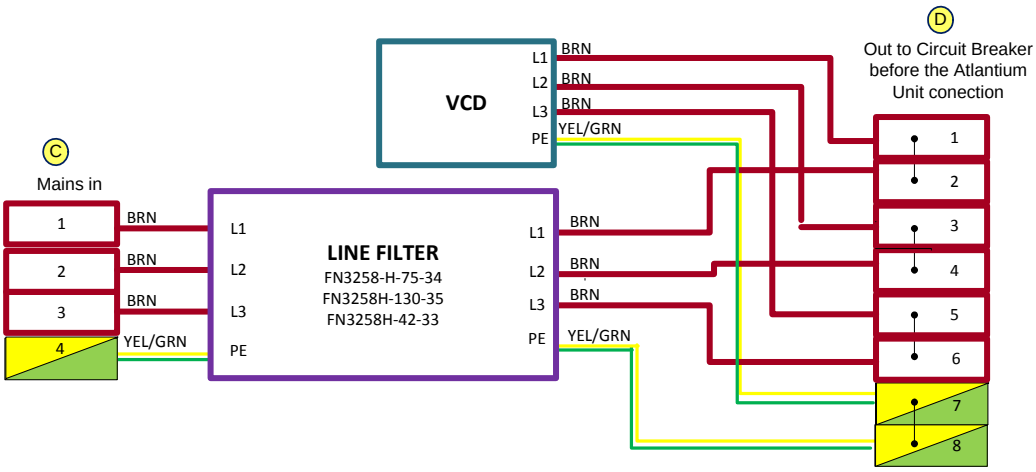

Figure 5-17: Typical Atlantium System Connections for the OVPD

- All wires are 5AWG with UL Standard
- Test: 100% Insolation Resistance: 1000VDC/0.1sec

5.7 The Controller

The **Controller** contains a jumper marked **11** in **Figure 5-18**.

Table 5-1: **Controller** Components

#	Item
1	Mounting Holes
2	Data Cable + Gland
3	Electrical Cable + Gland
4	Electrical Connectors
5	Holes for Peripheral Component Connections
6	Various Component Connectors (See **Table** 5-5 on page 5-19)
7	Ethernet Connector
8	Circuit Breaker
9	Wireless Modem (factory installed)
10	Connector for Wireless Modem (factory connected)
11	Jumper (**Rev B** only)
12	Gnd Wire
13	Connection to Screen Display

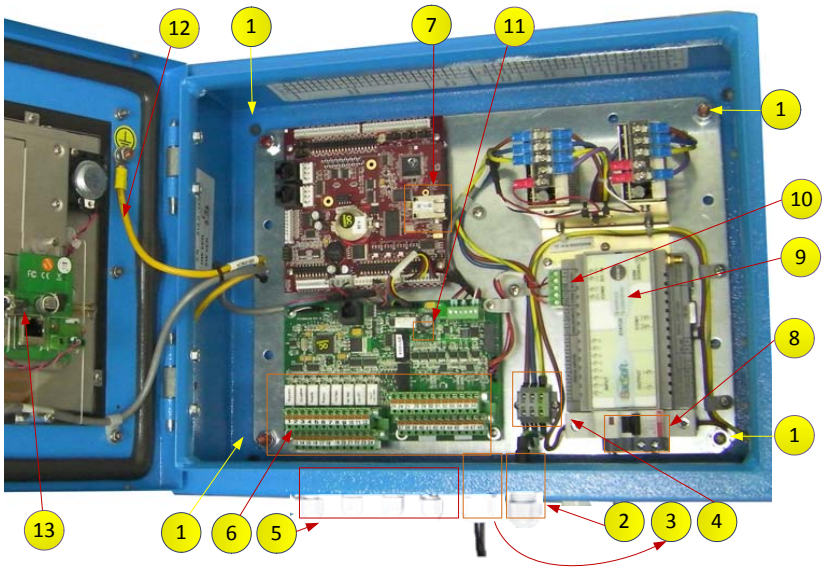

Figure 5-18: Controller Interior

5.7.1 Mounting the Controller

The **Controller** can be mounted on a wall or suitable anchoring point. The **Controller** comes with an electrical and Data cable, each 5m long. However it can be placed up to 50 meters (164.04 ft.) from the Atlantium Unit, in a place that it is easy to reach the touch screen and read the monitoring information. A longer Data Cable can be ordered for this purpose.

- When mounting the **Controller**, take into consideration the length of the cables.
- **Do not Stretch Electrical Cables - Avoid tension on the electrical cables. They are to be installed within conduits and must not be stretched.**

➲ To mount the Controller on the wall:

Step 1. On the wall space designated for the **Controller**, make four marks according to the spacing measurements for mounting orientation on the ICD drawing accompanying the documentation.

Step 2. The mounting holes **(1)** are 8.5mm (0.33") in diameter. Using the appropriate drill bit, drill the four holes.

Step 3. In each hole, insert a plastic anchor.

Step 4. Uncrate the **Controller unit** package and carefully lift it out.

Step 5. Open the door of the **Controller** unit and remove the plastic covers on the four holes.

Step 6. Position the **Controller** unit so that its four holes fit over the drilled holes.

Step 7. Using appropriate screws and with a screwdriver, screw in the four screws in a diagonal pattern (one corner, then the opposite corner).

Step 8. To secure the Unit firmly, return to each screw in the diagonal patter and tighten the screws securely.

➲ To mount the Controller on skids:

Step 1. At the location designated for the **Controller** set up the skids with spacing that matches the spacing measurements for mounting orientation on the ICD drawing accompanying the documentation.

Step 2. The mounting hole **(1)** are 8.5mm (0.33") in diameter. Using the appropriate bolts and nuts, with a screwdriver, screw in the four bolts and add the nuts leaving around 5.6mm (0.20-0.24') sticking out.

Step 3. Uncrate the **Controller unit** package and carefully lift it out.

Step 4. Open the door of the **Controller** unit and remove the plastic covers on the four holes.

Step 5. Position the **Controller** unit so that its four holes fit over the corresponding holes on the skids.

Step 6. Using appropriate bolts and nuts and with a screwdriver, screw in the four bolts adding the nuts in a diagonal pattern (one corner, then the opposite corner).

Step 7. To secure the Unit firmly, return to each bolt in the diagonal patter and tighten them securely.

5.8 Mounting the 48VDC Module

The 48VDC Module can be mounted on a wall or suitable anchoring point up to 10 meters (32.8 ft.) from the Atlantium unit. The 48VDC Module can be positioned near a Ballast Module with a minimum of 300 mm (11.8 inches) of clearance on each side for proper ventilation.

The 48VDC cable, Data cable, and Power cable are supplied attached to the 48VDC Module.

- **When mounting the 48VDC Mod**ule take into consideration the length of the cables.
- **Do not Stretch Electrical Cables - Avoid tension on the electrical cables. They are to be installed within conduits and must not be stretched.**

➲ To mount the 48VDC Module on the wall:

Step 1. On the wall space designated for the 48VDC Module, make four marks according to the spacing measurements for mounting orientation on the ICD drawing (see the ICD provided by Atlantium).

Step 2. The mounting holes **(A)** are 8.5mm (0.33") in diameter. Using the appropriate drill bit, drill the four holes.

Step 3. In each hole, insert a plastic anchor.

Step 4. Uncrate the 48VDC Module package and carefully lift it out.

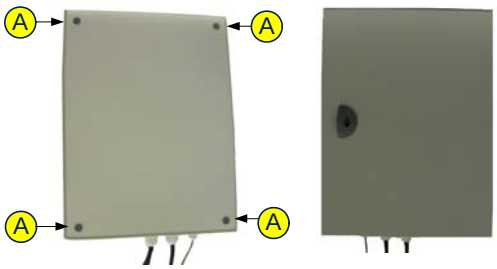

Figure 5-19: 48VDC Module - Back and Front View

Step 5. Open the door of the 48VDC Module and locate the mounting holes **(A)**.

Step 6. Remove the protective covers from each hole.

Step 7. Position the 48VDC Module so that its four holes fit over the drilled holes.

Step 8. Using appropriate screws and with a screwdriver, screw in the four screws in a diagonal pattern (one corner, then the opposite corner).

Step 9. To secure the Unit firmly, return to each screw in the diagonal pattern and tighten the screws securely.

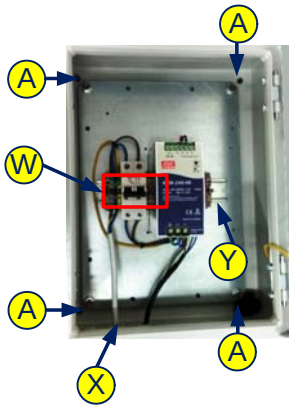

Figure 5-20: 48VDC Module - Generic Inside View

➲ To mount the 48VDC Module on skids:

Step 1. At the location designated for the 48VDC Module, set up the skids with spacing that matches the spacing measurements for mounting orientation on the appropriate ICD drawing (see the ICD provided by Atlantium).

Step 2. The mounting holes **(A)** are 8.5mm (0.33") in diameter. Using the appropriate bolts and nuts, with a screwdriver, screw in the four bolts and add the nuts leaving around 5.6mm (0.20-0.24') sticking out.

Step 3. Uncrate the 48VDC Module package and carefully lift it out.

Step 4. Open the door of the 48VDC Module and locate the mounting holes **(A)**.

Step 5. Remove the protective covers from each hole.

Step 6. Position the 48VDC Module so that its four holes fit over the corresponding holes on the skids.

Step 7. Using appropriate bolts and nuts and with a screwdriver, screw in the four bolts adding the nuts in a diagonal pattern (one corner, then the opposite corner).

Step 8. To secure the Unit firmly, return to each bolt in the diagonal patter and tighten them securely.

5.9 Installing the Ballast Module(s)

Each lamp chamber has a corresponding Ballast Module. The location for mounting the Ballast Module(s) must take into account the length of the cables to be attached from the Atlantium Unit. If you need to calculate space cooling for the location in which you are installing the Ballast Module(s), refer to the heat load per Ballast Module shown below.

Heat Load per Ballast Module: 210W
(For calculating space cooling requirements)

- **Do not Stretch Electrical Cables - Avoid tension on the electrical cables. They are to be installed within conduits and must not be stretched.**

.

Ballast Modules must be installed vertically (as shown to the right) and at least one meter above ground level. Ballast Modules must be at least 300mm (12") from each other or from any other object around them to allow proper ventilation. Ballast Modules must not be installed within closed cabinets.

You can mount them next to each other horizontally or one above another vertically. Arrange the Ballast Modules in consecutive order from left to right according to the number marked on the bottom of the Ballast Module.

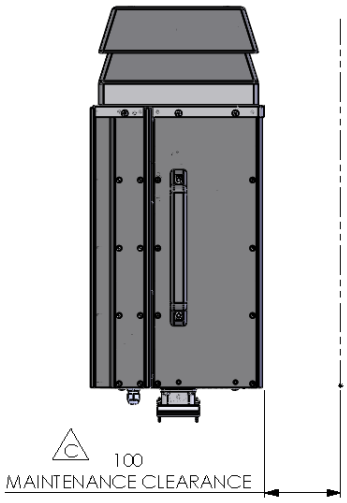

Figure 5-21: Ballast Module Depth

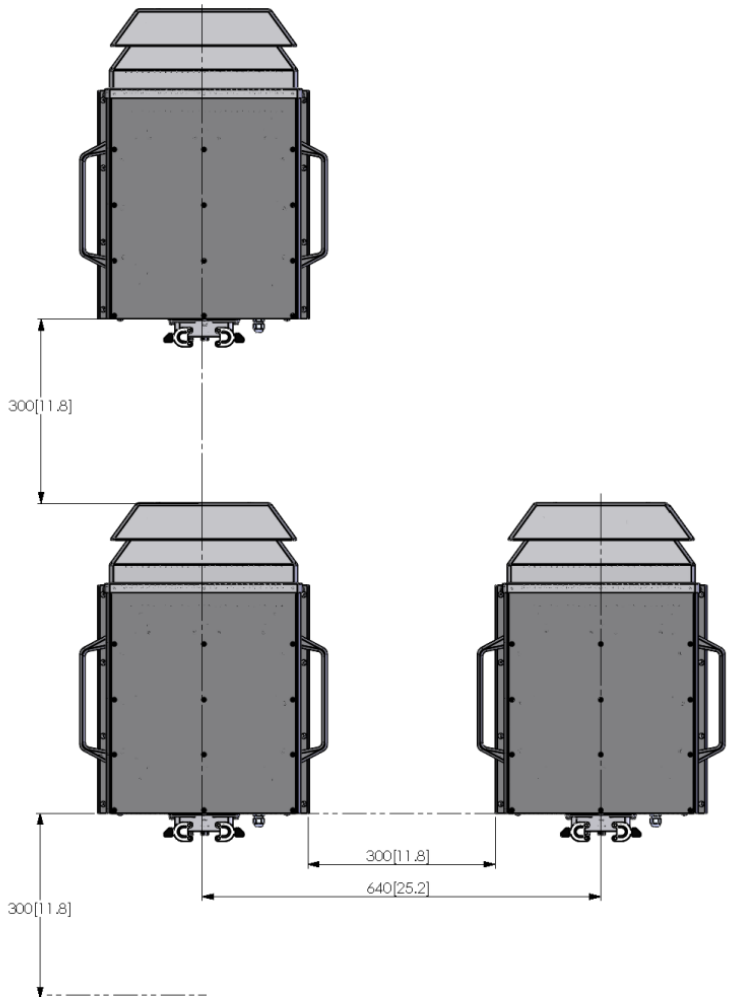

Figure 5-22: Multiple Ballast Module Installation Diagram

➲ To mount a Ballast Module on the wall:

The Ballast Module is heavy! Be sure that the wall on which you intend to mount the Ballast Module is strong enough to carry its weight.

Step 1. On the wall space designated for the Ballast Modules, make four marks according to the spacing measurements for mounting orientation on the ICD drawing accompanying the documentation.

Step 2. The keyhole slots for mounting are 7mm (0.28”) in diameter for screws size M6 OR 1/4” bolts. Using the appropriate drill bit, drill the four holes.

Step 3. In each hole, insert a plastic anchor and with the appropriate screwdriver, screw in the screw leaving around 5.6mm (0.20-0.24’) sticking out of the wall.

Step 4. Uncrate the Ballast Module package and carefully lift out the Unit.

Step 5. Fit the keyhole slots onto the protruding screw heads and slide the Unit downward until the top of the keyhole slots rest on the screws.

Step 6. To secure the Unit firmly, tighten the four screws.

➲ To mount a Ballast Module on skids:

Step 1. At the location designated for the Ballast Modules, set up the skids with spacing that matches the spacing measurements for mounting orientation on the ICD drawing accompanying the documentation.

Step 2. The keyhole slot for mounting is 7mm (0.28”) in diameter for screws size M6 OR 1/4” bolts.

Step 3. Using the appropriate screwdriver, screw in the four bolts and add the nuts leaving around 5.6mm (0.20-0.24’) sticking out.

Step 4. Uncrate the Ballast Module package and carefully lift out the Unit.

Step 5. Fit the keyhole slots onto the protruding bolt heads and slide the Unit downward until the top of the keyhole slots rest on the bolts.

Step 6. To secure the Unit firmly, tighten the four bolts and their nuts.

5.10 Connecting the Ballast Module Cables

One side of the **Cable Harness** is attached to the connection box of each lamp of the Atlantium Unit The other end of the **Cable Harness** connects to the corresponding Ballast Module via a single connector.

Table 5-2: Ballast Module

#	Item
A	Single Connector with lock latch
B	Connector width 13.11cm / 5.159inch.

Figure 5-24: Connector Detail

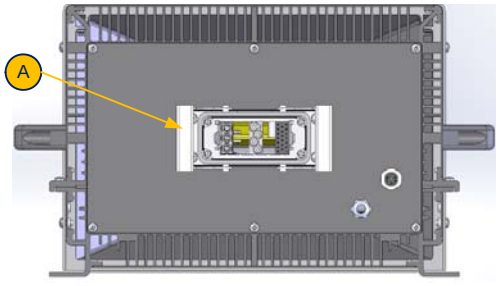

Figure 5-23: Waterproof Box - Single-Connector

➲ To connect the cable:

Step 1. According to the electrical drawing of the Installation plan, bring the **Cable Harness** attached to the Connection Box of Atlantium Unit up to the Ballast Module.

Step 2. On the Ballast Module, pull the lock latch of the connector to the open position and remove the protective cover.

Be sure to save the protective cover of the Ballast Module connector in an accessible location for the future in case you need to dismantle the Ballast Module for any reason.

Step 3. Connect the lamp cable lead to the Lamp connection port **(A** in **Figure 5-23** above**)** (the connector is keyed so it only matches in one position) and pull the lock latch closed to secure the connection.

5.11 Cabling Components

According to your system configuration, connect the cables of the mandatory flow signal, and optional Inlet, Outlet/Ready and Bypass Valves, etc. to the Connection Box of lamp 1 on the Atlantium Unit. On a side of the Connection box, there are 5 holes marked **9** in the diagram below to be used to thread these cables.

The Connection Box Card contains terminals for connecting signal wiring for the Flow Meter or Flow Switch, Bypass valve output, Inlet valve output, and Outlet valve output/System Ready, however, Atlantium recommends connecting the signal wiring for these on the **Controller**. Consult your Atlantium technician to see if the **Controller** software installed supports this.

DO NOT DRILL INTO THE CONNECTION BOXES OR ALTER THEM IN ANY WAY!!!!
The Connection Box already contains entry glands for ALL of the cabling needs.
Making holes in a Connection Box will destroy its waterproof seal, endangering the components inside. Do Not draw electricity from the Atlantium Unit's Connection Box as it will damage the Unit's electrical configuration.

Any person involved in handling the Connection Box card or its components is required to wear an electrostatic discharge (ESD) Wrist Strap.
Connect the ESD Wrist Strap to any bolt on the body of the Atlantium Unit or to the metal bracket under the Connection Box using a banana plug or an alligator clip.

The directions below are for all **RZB300-14 and RZB300-15** systems, in which the first Connection Box is labeled number **1**.
Where there is reference to the first Connection Box, for systems that contain only one Connection Box the single Connection Box is the first Connection Box.

5.11.1 Cabling Signal Components

According to your system configuration, connect the cables of the mandatory flow signal, and optional Inlet, Outlet/Ready and Bypass Valves, etc. to the Connection Box of lamp 1 on the Atlantium Unit. On a side of the Connection box, there are 5 holes marked **9** in the diagram below to be used to thread these cables.

The Connection Box Card contains terminals for connecting signal wiring for the Flow Meter or Flow Switch, Bypass valve output, Inlet valve output, and Outlet valve output/System Ready, however, Atlantium recommends connecting the signal wiring for these on the **Controller**. See ***Controller Connections*** on page **5-16.** Consult your Atlantium technician to see if the **Controller** software installed supports this.

5.11.2 Connection Box Card 1300

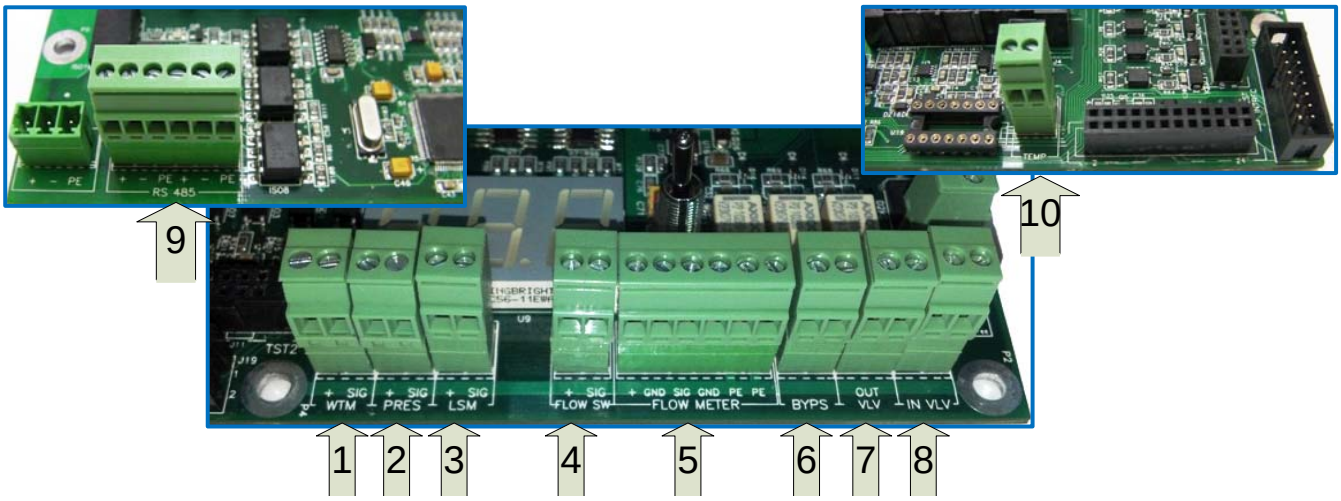

Figure 5-25: Signal Connections on Connection Box Card 1300

Table 5-3: Signal Connections Key - Connection Box Card 1300

#	Text on the Circuit Board	Description	Signal type	Value	Notes
1	WTM	UVT Analyzer input	Analog	4-20mA	already assembled
2	PRES	Pressure Transmitter input (Optional)	Analog	4-20mA	Optional
3	LSM	UVIS Sensor input	Analog	4-20mA	already assembled
4	FLOW SW	Flow switch input	Digital	Dry contact / Open collector	Either Flow Switch or Flow Meter Optional *
5	FLOW METER	Flow meter input	Analog	4-20mA	
6	BYPS STR	Bypass valve output	Dry contact		Optional *
7	OUT VLV	Output valve output	Dry contact		Optional *
8	IN VLV	Inlet valve output	Dry contact		Optional *
9	RS485	RS485 Port			
10	TEMP	Temperature sensor input	Analog		already assembled

* Atlantium recommends connecting the signal wiring for these on the **Controller**. Consult your Atlantium technician to see if the **Controller** software installed supports this.

➲ To cable signal components:

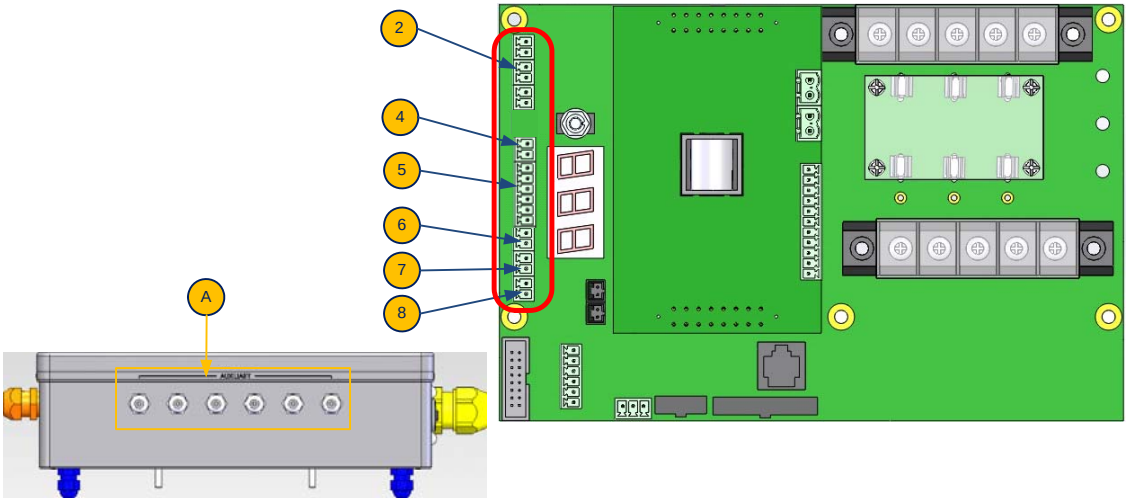

Figure 5-26: Connection Box Side and Inside View-Auxiliary Components Connections

Step 1. On the first **Connection Box**, remove the covers of holes (marked **A** in the diagram below) as needed for the auxiliary components in your system configuration.

Step 2. Add plastic glands to each hole to be used.

Step 3. For the (optional) **Inlet Valve** connection, the maximum voltage is **250 VAC**. The maximum current is **1.2 Amp**. The maximum switching capacity is **50 W**. On the first Connection Box, insert the **Inlet Valve** cable into one of the holes marked **A** and thread it up to the Dry Contact connectors labeled **IN VLV** (marked **8** in the diagram above.)

Step 4. For the (optional) **Outlet Valve** connection, the maximum voltage is **250 VAC**. The maximum current is **1.2 Amp**. The maximum switching capacity is **50 W**. On the first Connection Box, insert the **Outlet Valve** cable into one of the holes marked **A** and thread it up to the Dry Contact connectors labeled **OUT VLV** (marked **7** in the diagram above.)

Step 5. For the (optional) **Bypass Valve** connection, the maximum voltage is **250 VAC**. The maximum current is **1.2 Amp**. The maximum switching capacity is **50 W**. On the first Connection Box, insert the **Bypass Valve** cable into one of the holes marked **A** and thread it up to the Dry Contact connectors labeled **BYPS STR** (marked **6** in the diagram above.)

Step 6. To connect the **Flow Signal:**

- For a **Flow Meter**, on the first Connection Box, insert the cable into one of the holes marked **9** and thread it up to the connectors labeled **FLOW METER** (marked **5** in the diagram above.) the standard current is 4-20mA. Connect the wires according to the manufacturer's instructions. The connectors are marked **PE**, **PE**, **SIG**, **GND**, and **+**. Typically, the cable is comprised of three wires and the shield. A wire connects to the **+** port and a second wire connects to the **SIG** port. The GND wire connects to the **GND** port. The Shield connects to one of the **PE** ports.

Use the **+** pin for the signal source (current loop) **ONLY**.
Do not use the **+** pin as the power source for the flow meter. For more information see ***Flow Measurement/ Detection*** on page **3-13**.

- For a **Flow Switch**, on the first Connection Box, insert the cable into one of the holes marked **9** and thread it up to the connector labeled **FLOW SW** (marked **4** in the diagram above.) Connect the wires according to the manufacturer's instructions. The ports are marked **+** and **SIG**.

Step 7. Fasten the plastic nut of each of the cable glands.

5.12 Controller Connections

You can connect signal wires for the following peripheral equipment to the Controller's terminal block:

- Atlantium Unit's Data Cable
- System Ready/Outlet Valve
- General Alarm
- Shutdown Warning
- High Temperature
- UVT Out
- Low UVT
- TRAC Communication Loss
- Inlet Valve Output
- Bypass Valve Output
- Flow Meter Input
- Flow Switch Input
- Conductivity Meter (RZM Only)
- External On/Off
- Dose Output
- Modbus

➲ To connect peripheral equipment:

Step 1. Using the attached key, open the screen panel of the **Controller**.

Step 2. Use the holes, adding plastic glands as needed, on the bottom **(B)** to insert cables.

Step 3. Use the hole **(C)**, adding plastic glands as needed, on the bottom to insert the data cable from the Atlantium Unit.

Step 4. Thread the cables to the appropriate connector **(A)** according to the table below.

Step 5. For connecting to an external facility control via Modbus, see **Appendix A**, ***Modbus Communication Protocol*** . Add jumpers to any unused pins as shown in the diagram below.

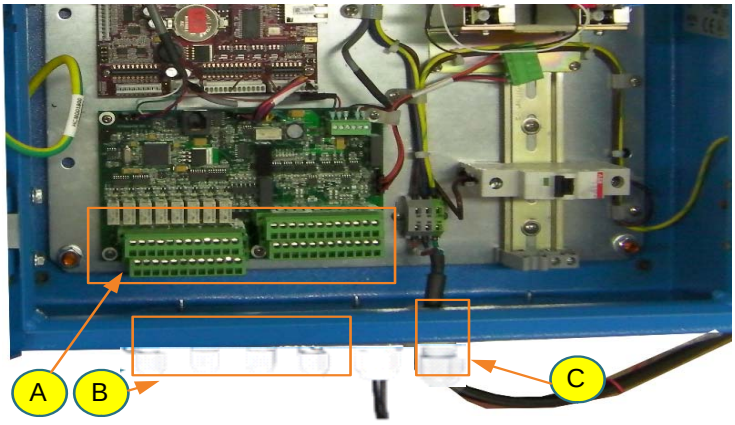

Figure 5-27: Controller Interior Generic

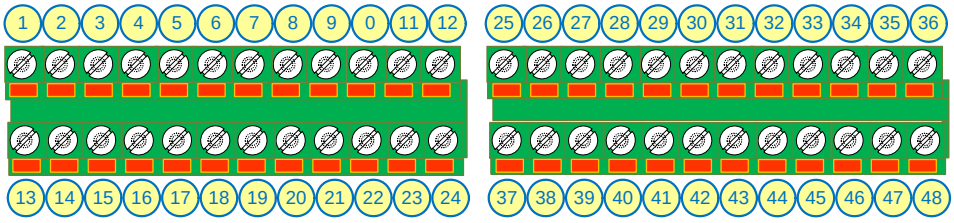

Figure 5-28: Controller Terminal Connectors

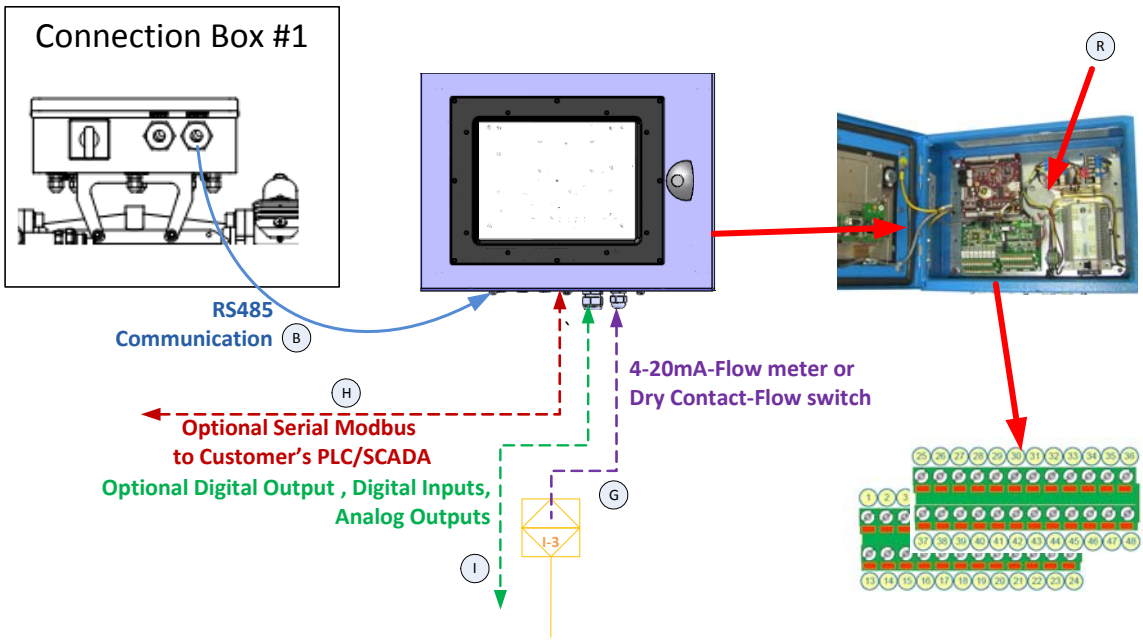

Figure 5-29: Digital and Analog Input and Output Connections-Schematic Diagram

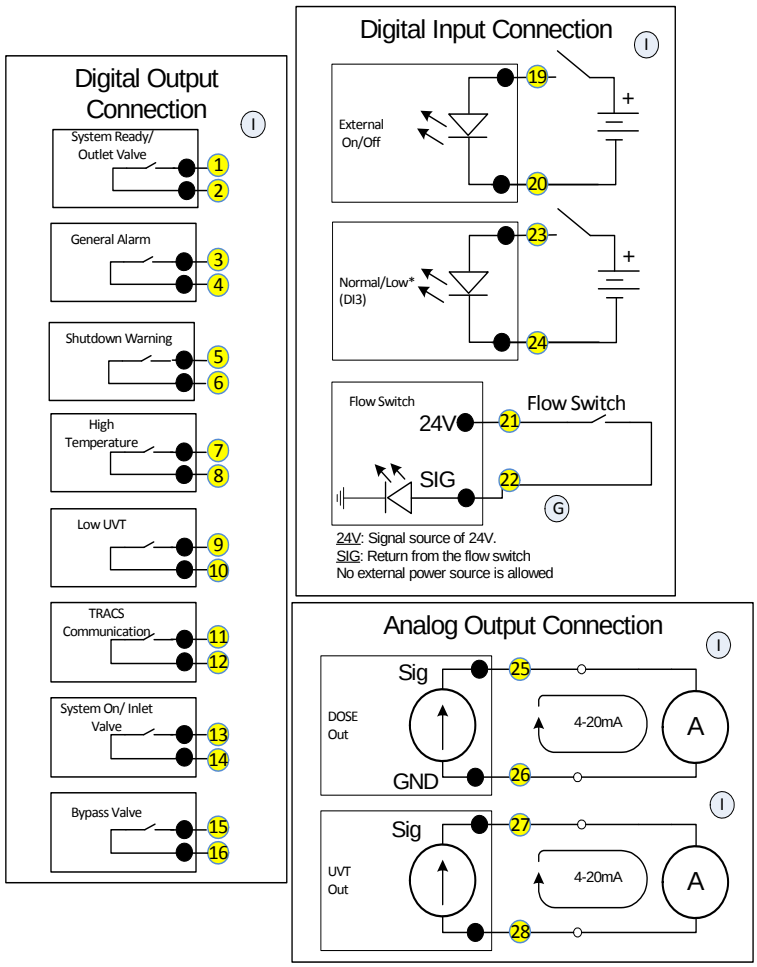

Figure 5-30: Digital and Analog Input and Output Connections

*** Low:** The system works at minimum power no matter if it is set to power mode or dose mode.

Normal: In power mode the power is as user defined and in dose mode the system regulates the power as necessary during regular operations.

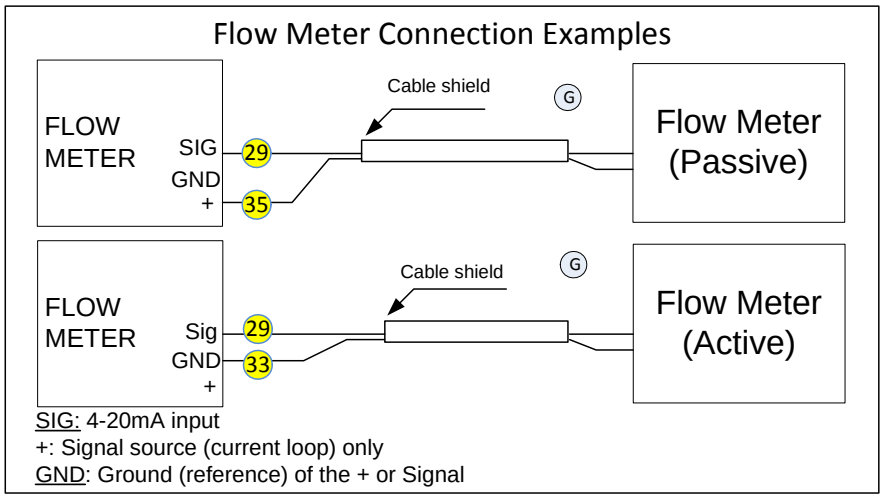

Figure 5-31: Flow Meter Connection Examples

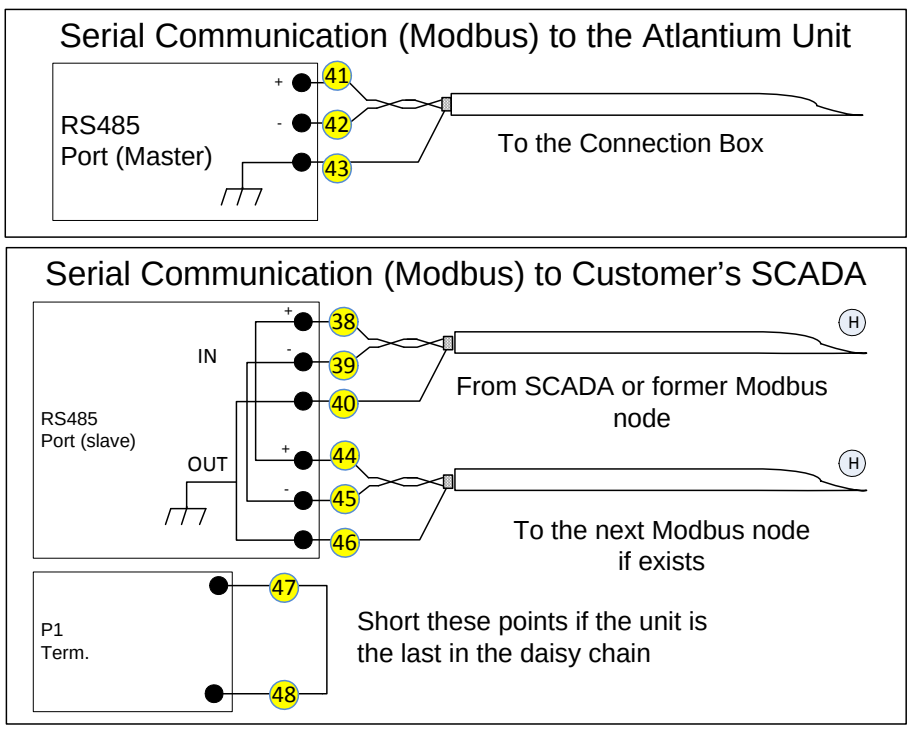

Figure 5-32: Serial Communication (Modbus) Connections

For incoming power to the Controller and the Connection Box, see the power distribution diagram.

Table 5-4: Peripheral Equipment Cable Details

#	Item	Sizes	Cat. No.	Description	Diameter	Supplied by
B.	Controller Module RS485 data communication cable	5m/16.4ft. 10m/32.8ft.	HSL013200 HLS014500	Shielded twisted pair, 22AWG, 300V(General cables C0720A)	0.25 inch	Atlantium
G.	Flow Meter 4-20mA or Flow Switch cable Dry contact	Customer defined	-	Connect to Connection Box no.1 through gland size 7. Wires size according to Flow Meter / Flow Switch manufacturer's instructions	0.25 inch	Customer
H.	RS485 Data communication cable	Customer defined	-	Shielded twisted pair, 22AWG, 300V	0.25 inch	Customer
I.	Digital output , Digital inputs, Analog outputs	Customer defined	-	Shielded cable, pairs of 22AWG, 300V	According to the number of pairs	Customer
R.	Laptop Controller interconnect	Customer defined	-	Standard ETHERNET cable	-	Customer

Table 5-5: Controller Terminal Block Connector Pins J35 (J3+J5)

	Function	Pin's Number	Values
Digital Outputs	System Ready/Outlet Valve COM	1	Dry Contacts Max. Voltage: 220VDC/250VAC Max. current: 2A Max. switching capacity: 60W
	System Ready/Outlet Valve N.O.	2	
	Alarm COM	3	
	Alarm N.O.	4	
	Shutdown Warning COM	5	
	Shutdown Warning N.O.	6	
	High Temperature COM	7	
	High Temperature N.O.	8	

Table 5-5: Controller Terminal Block Connector Pins J35 (J3+J5)

	Function	Pin's Number	Values
Digital Outputs	Low UVT COM	9	
	Low UVT N.O.	10	
	TRACS Communication COM	11	
	TRACS Communication N.O.	12	
	System On/Inlet Valve COM	13	
	System On/Inlet Valve N.O.	14	
	Bypass Valve COM	15	
	Bypass Valve N.O.	16	
	Spare	17	
	Spare	18	
Digital Inputs	External On/Off (DI1) +	19	On: 10-48VDC Off: <1VDC See ***External On/Off - Additional Notes*** on page **5-22**
	External On/Off (DI1) -	20	
	Flow Switch (DI2) 1	21	
	Flow Switch (DI2) 2	22	
	Normal/Low (DI3)+	23	
	Normal/Low (DI3)-	24	
Analog Output	Dose Out+	25	4-20mADC, Max. Rsens= 200R
	Dose Out- (GND)	26	
	UVT Out+	27	
	UVT Out - (GND)	28	

Table 5-5: Controller Terminal Block Connector Pins J35 (J3+J5)

	Function	Pin's Number	Values
Analog Input	Flow Meter Return 4-20mA	29	4-20mA
	Conductivity Meter Return 4-20mA	30	
	Spare	31	
	Spare	32	
	GND for 4-20mA (for Flow Meter-option 1)	33	
	GND for 4-20mA (for Conductivity Meter-option 1)	34	
	24V for 4-20mA (for Flow Meter-option 2)	35	
	24V for 4-20mA (for Conductivity Meter-option 2)	36	
	Spare	37	
Modbus Slave in	RS485 Rx / Tx+	38	Main Modbus connector. For RS485 physical connections, to make a Modbus daisy chain incoming connection from another Controller. The jumper is required. (See item **11** in **Figure 5-28** on page **5-16**) **For wireless modem connections, the jumper must be removed** (LED is off).
	RS485 Rx / Tx-	39	
	RS485 PE	40	Earthing
Modbus Master	RS485 Rx / Tx+	41	Connector for the Atlantium Unit's Data Cable
	RS485 Rx / Tx-	42	
	RS485 PE	43	Earthing
Modbus Slave out	485 Rx / Tx+	44	To make a Modbus daisy chain outgoing connection to another Controller
	485 Rx / Tx-	45	
	485 PE	46	Earthing
Slave RS485	Term 1	47	Termination connector For the Controller that is last in a daisy-chain, insert a jumper here
	Term 2	48	

5.12.1 External On/Off - Additional Notes

For regular wiring:

- Positive voltage must be connected to pin 19 – IN+
- Negative (GND) must be connected to pin 20 – IN-

Table 5-6: External On/Off

Controller Screen External On/Off	Physical Connection IN+	Physical Connection IN-	Lamp Control
Normally Open	0 VDC	0 VDC	Off
Normally Open	+24 VDC	0 VDC	On
Normally Closed	0 VDC	0 VDC	On
Normally Closed	+24 VDC	0 VDC	Off

5.13 Modbus Communication Connections

Modbus is an application layer messaging protocol for client/server communication between devices connected on different types of buses or networks. Modbus is often used to connect a supervisory computer with a remote terminal unit (RTU) in supervisory control and data acquisition systems.

The Atlantium system can be controlled directly from your facility control system via Modbus - RTU on RS485 (network) serial connection.

To accomplish this:

- The Modbus Settings must be configured in the **Controller**. See ***Configuring More Settings*** on page **7-12.**
- The Facility control system communication properties must be configured to match that of the Atlantium system. See ***Setting Up the Facility System Communication Properties*** on page **5-23.**
- For the terminal block connectors for the Modbus in the **Controller,** see Table **5-5** ***Controller Terminal Block Connector Pins J35 (J3+J5)*** above.
- Signalling communication incoming to the facility control system is according to the Modbus Registers. **Appendix B**, ***System Messages*** .

To ensure communications are operational, be sure to connect the cables **TX to RX** and **RZ to TX**.

5.13.1 Setting Up the Facility System Communication Properties

To properly configure communications between your Atlantium system and control network, set up the communication properties and **COM1** port settings at the facility control system as follows:

Node Address:	1 to 256 ***
Available Commands	Function codes
Function Codes: *	0x01, 0x02, 0x03, 0x04, 0x05, 0x06, 0xF, 0x10
Support IEEE Floating Point: **	NO (register/100)
Baud Rate:	4800, 9600, 19200, 38400, 57600, 115200 ***
2 Wire	
Parity:	None
# of Stop Bits:	1
# of Data Bits	8

(*) You can read all the registers in the system at once with **0x03** (includes coils, discreet coils, holding registers and input registers).

(**) Divide the desired parameter by 100 to calculate the real flow point.

(***) Must be the same in the controller setting

To view the Modbus Registers, which govern the signalling communication from the Atlantium system to the facility control system, see **Appendix B**, ***System Messages*** .

5.14 Connecting the Atlantium System to the Mains

WARNING!!!

UNDER NO CIRCUMSTANCES SHALL ELECTRICAL WORK BE CARRIED OUT WITHOUT VERIFYING THAT ALL MAIN CIRCUIT BREAKERS OF THE ELECTRICAL LINES FEEDING THE ATLANTIUM SYSTEM COMPONENTS ARE SET TO THE OFF POSITION AND THAT NO ELECTICAL FEED IS LIVE.

DO NOT SET ANY MAIN CIRCUIT BREAKER OF THE ELECTRICAL LINES FEEDING THE ATLANTIUM SYSTEM COMPONENTS TO THE ON POSITION UNTIL ALL ELECTRICAL WIRING IS PROPERLY CONNECTED. UNCONNECTED WIRES/CABLES IN A LIVE ELECTRICAL FEED IS A HAZARDOUS SITUATION THAT CAN RESULT IN DEATH OR SERIOUS INJURY.

ONLY AFTER ALL OF THE CONNECTION TO THE MAINS ARE CARRIED OUT DO YOU SET THE MAIN CIRCUIT BREAKERS TO THE ON POSITION.

The infrastructure of the electrical connections is to have been prepared according to ***Preparing for the Electrical Wiring to the Mains*** on page 3-11.

For installations that require the Power Module or the OVPD unit, the customer must provide the Power cable to the mains.

For information on the Electrical Requirements, see:

- **Section 2.** ***About the RZB300 Series Systems***, ***Electrical Usage*** on page 2-5
- **Section 3.** ***Getting Ready for Installation***, ***Electrical Requirements*** on page 3-8

Mains Connection Phases

Make sure the circuit breakers before the mains are set to the **Off** position. **BEFORE** connecting the Atlantium system to the mains.
AFTER all of components of the Atlantium system is connected to the mains, set the circuit breakers to the **On** positions.

Phase 1 Connect the **Controller** to the mains.
Phase 2 Connect the Atlantium Unit's 48VDC Module to the mains (if exists)
Phase 3 Connect the Atlantium Unit's Power cable to the mains.

- **Do not Stretch Electrical Cables - Avoid tension on the electrical cables. They are to be installed within conduits and must not be stretched.**

5.14.1 Connecting the Controller's Power Cable

The **Controller** comes with a power cable of 2m/6.5ft. length. For the electrical specifications, See ***The Controller*** on page **2-7.** Prepare the appropriate plug for the electrical standards of your region. Considering the distance between the **Controller** and your electrical box, you may want to replace the electrical cable with a longer one.

➲ To connect the Controller's power cable:

- Connect the appropriate plug for the electrical standards of your region.
- **Do not** plug in the **Controller** to an outlet until after the hardware installation is complete and the system is ready to be initialized. (See ***Initializing the Atlantium System*** on page **6-1.**)

5.14.1.1 Replacing the Controller's Power Cable

You can order a longer cable from Atlantium or acquire one that conforms to the specifications in **Table 3-2** on page **3-7** from a local source.

Avoid direct contact with the electronic circuit board which is sensitive to electrostatic discharge (ESD). Utilize best practices regarding ESD when replacing the power cable.

➲ To connect a longer power cable to the Controller:

Step 1. Using the attached key, open the screen panel of the **Controller**.

Step 2. Refer to the figure on the right. Locate the electrical connector **(4)**.

Step 3. Disconnect the existing cable and loosen the plastic nut of gland **(3)**.

Step 4. Pull the electrical cable out through the gland **(3)** at the bottom of the Unit.

Step 5. Insert the end of the longer power cable into the gland **(3)**, pulling the cable through.

Step 6. Connect the cable's two power leads to phases or single phase plus neutral **(NU + 1, 2, or 3)**, according to your voltage configuration and connect the ground lead to **GND**.

Step 7. Tighten the gland's plastic nut.

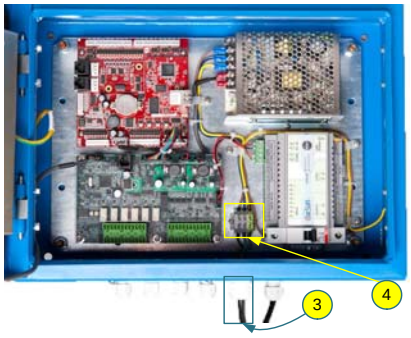

Figure 5-33: Controller's Circuit Board Power Connections-Generic

5.14.2 Connecting the 48VDC Module to the Mains

If your system includes the 48VDC Module, the voltage is 220V to 480V. The customer-supplied cables are to be connected either L-L or L-N. Refer to the appropriate diagram in ***Preparing for the Electrical Wiring to the Mains*** on page **3-11**.

5.14.3 Connecting the Atlantium Unit's Power Cable

The Atlantium Unit comes with a power cable of (5m/15ft.) or 10m/30ft (according to you order.) Prepare the appropriate plug for the electrical standards of your region. Considering the distance between the Atlantium Unit and your electrical box, you may want to replace the electrical cable with a longer one.

A certified electrician is required to perform these procedures. Follow your local regulations.

➲ To connect the Atlantium Unit's power cable:

- Connect the appropriate plug for the electrical standards of your region and connect it to a mains outlet.
- **Do not** connect the Unit's Power cable to an outlet until after the hardware installation is complete and the system is ready to be initialized. (See ***Initializing the Atlantium System*** on page **6-1**.)

5.15 Installation Check List

When you are ready to schedule the Atlantium technician to commission the Atlantium system, complete the check list below. Send this check list together with digital photos of every angle of the installed system to your Atlantium representative. It generally requires at least 2 weeks after the check list has been completed to schedule the Atlantium commissioning.

Table 5-7: Atlantium System Installation Check List

Item	Done
■ The System is installed: ❑ Vertically - Water is flowing upward ❑ Horizontally	
■ The Atlantium Unit, Ballast Module and other components are located in their final position ■ The Atlantium Unit and all of its components are not located where they may be in contact with direct water or chemical dripping ■ Ballasts are installed in a vertical position. ■ All Ballast Module connections are complete. ■ The electrical cables between components are not stretched.	❑ ❑ ❑ ❑ ❑
■ All of the System components are securely installed and have sufficient service clearance on all sides (according to the ICDs).	❑
■ All power preparations are complete and Power connects are wired as instructed in this guide. ■ Correct voltage was measured where the Power connects to the Ballast Module ■ Voltage rate _____ Number of phases _____	❑ ❑
■ The Atlantium Unit is connected to the water pipes according to the Installation plan developed by facility engineers and Atlantium personnel. Proper pipe lengths are installed.	❑
■ Water flows through the Atlantium Unit - The Unit has been checked while full of water and no bubbles or leaks exist in the system. The system is balanced, supported and pressure stable (no vibration, etc.). No known water hammers or pressure above 10 bars are on the line.	❑
■ All piping accessories are installed and wired as instructed in this guide (e.g., Inlet/Outlet valves, sampling valves, draining valves, CIP valves, air release valve, etc.) ❑ Sampling Valves ❑ CIP Ports ❑ Draining Valves ❑ Air Release Valves	❑
■ A flow meter or flow switch is installed and the electrical and data connection are complete. ❑ If flow meter: 4 - 20 mA signal and Com wires are connected as instructed in this guide. ❑ If flow switch: 2 wires from the flow switch are connected as instructed in this guide. ❑ A 4 - 20 mA signal from the PLC is installed.	❑
■ The **Controller** connects is complete. All supporting features (e.g., General Alarm, External On/Off, etc.) and wiring were installed according to the Installation plan based on the instructions in this guide.	❑
■ All Connection Box connections are complete. All supporting features (e.g., flow meter or flow switch, auto valves open/close) and wiring were installed as instructed in this guide.	❑
■ For systems with **TRACS**, network connection was installed between **TRACS** the **Controller**.	❑

Table 5-7: Atlantium System Installation Check List

Item	Done
■ **You are scheduling an electrician to be on site and available during the System commissioning (a must or the installation cannot be completed).**	❑
■ To be sent to Atlantium with this checklist, attach photos of the following: ❑ Atlantium Unit ❑ Ballast Module(s), **Controller** and other components ❑ Accessories (Flow meter or flow switch, CIP ports, Sampling valves, etc.)	
Customer Approval Name of Customer's authorized representative: _____ Position: _____ Signature of Customer's authorized representative: _____ Date: _____	

6 Initializing the Atlantium System

The Atlantium system starts up with the initialization of the **Controller.**

➲ To start up the Atlantium system:

Step 1. Check that the Ballast Module power cable is connected to the main power source.

Step 2. Connect the power cable of the Controller to the main power source.

Step 3. Using the attached key, open the screen panel of the **Controller**.

Step 4. Locate the circuit breaker and turn it to the **On** position.

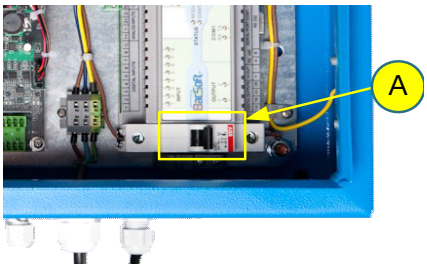

Figure 6-1: Controller

The system powers up and the **Controller's** touch-screen monitor is activated, displaying the Atlantium software's opening screen. The Atlantium **Controller** software's opening screen appears for a short time while the system performs its internal self-testing routines. A progress bar **(A below)** appears on the bottom of the screen. When the self-testing routines are complete, the **Main Operation** screen appears. The **Lamp Power** button on the top right is on the **Off** position. The **Ready** button turns red when the system is ready for operation.

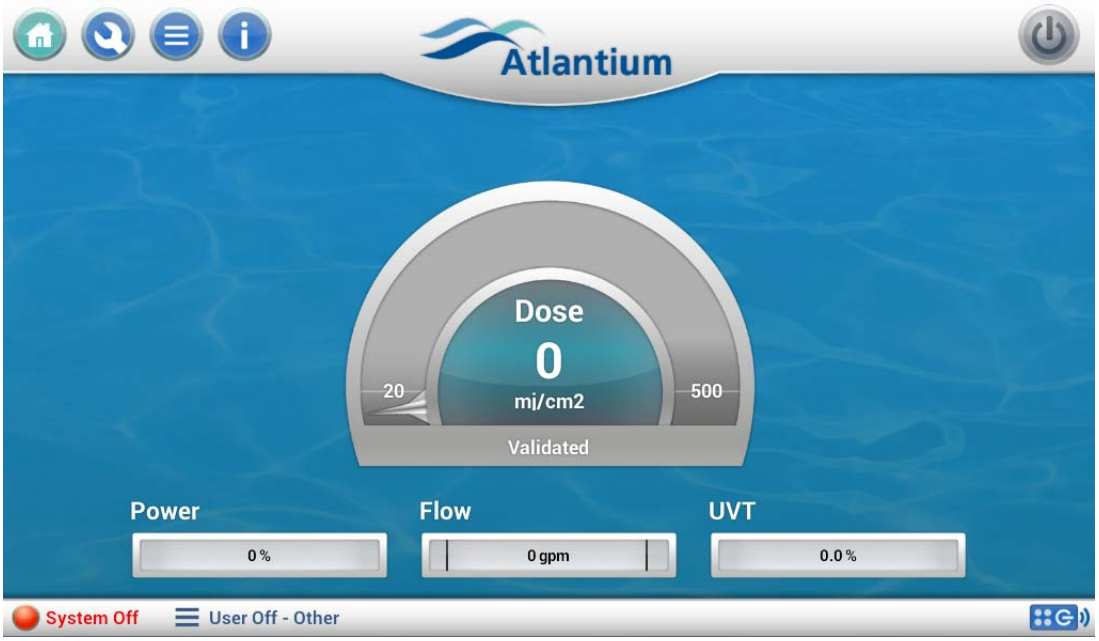

Figure 6-2: Initial Main Operation Screen*

The screen is generic. The number of lamps on your Controller screen are according to the number of lamps in your Atlantium Unit.

7 Configuring the Controller

The **Controller** controls the operations and dose measurements of the Atlantium system.

The regulatory application type determines sizing as well as software defaults and operational control options. This is set up at the original manufacturing facility and completed on site by the Atlantium technician.

The **Controller** provides a real-time display of operational data. A Ready indicator turns green when the system is ready for operation.

Figure 7-1: Initial Main Operation Screen*

**** The screen is generic. The number of lamps on the screen are according to your the number of lamps in the Atlantium Unit.***

Table 7-1: Main Screen Components

#	Item	Description
1	**Home Button**	To return to the main screen.
2	**Settings ~~Screen Access~~**	To access the Settings screens - password protected.
3	**Events ~~Screen Access~~**	To the Events screen.
4	**~~General~~ Info**	Includes the Generic Info ~~tab~~ that displays general system information and lamp status and the ~~Info Monitor tab~~ that displays a summary of system status information.
5	**Main Unit Operation Button**	ON/Off toggle button turns on/off the Atlantium unit. lamp(s), cooling system, computer control (UV power, etc.) startup is in an orderly manner.
6	**Dose Gauge**	Represents the total system dose. The gauge's red area represents off-spec dose. The dark green area represents the user's set maximum allowable dose. The indicator in the middle of the gauge points to the current dose. The gauge has two different linear functions - from the dose setting down and from the dose setting up. The minimum and maximum allowable dosage levels are user-defined.
7	**Flow indicator**	Scale shows the current rate of water flowing through the Unit.
8	**Power Indicator**	Scale shows the current power Level.

Table 7-1: Main Screen Components

#	Item	Description
9	**System Ready and L[illegible] Indicator**	Displays system-ready status messages and Ready signal Green = Ready; Red = Not Ready.
10	**~~Set~~ Application**	Displays the application according to which the system is configured.
11	**UVT (Transmittance) Indicator**	Scale shows the amount of UV light transmitted through the water. If the UVT percentage ~~factor~~ is high, the transparency of the water in UV light is high, and vice versa. For those operating in EPA mode, the Atlantium Unit becomes off spec if the UVT goes lower than the validated UVT, in which case the system can be set to either divert (to drain or recirculation tank), shutdown, or operate off spec.
12	**Network Communications Indicator**	Indicates the status of communications with the lamps

Configuring the Atlantium system is based on the Application type set for your industry and according to the parameters required for your facility's process.

Configuring the **Controller** begins with accessing the Settings screen and follows the general order of the screen components.

7.1 Accessing the Settings Screens

The settings screens are accessed during the installation and setup of the Atlantium system, and when there are hardware changes made in peripheral equipment. The Settings screens are accessed via tabs at the top of the screen.

During normal operations, an authorized facility technician may need to access certain functions, or view certain information, that appears on the some of these screens.

Take care to assure that the configuration made via the Settings screen is not tampered with. Unauthorized changes may have a serious impact on the function of the Atlantium system. Only trained and authorized facility technicians are to access the Settings screens when instructed to do so by an Atlantium support engineer.

Screens display values according to metric or US units according to customer localization.

➲ To access the Settings screens:

Step 1. At the top of the screen, press . The **Monitor Tab** is displayed.

Lamp ID	Power %	Status %	UVT %	UVIS mA	UVTS mA	Lamp kW	Lamp V	Lamp A	Temp F	On Off	Lamp Enabled
1	100	54	98.6	16.5	12.5	4.20	400.00	10.50	N/C		
2	100	89	0.0	16.5	N/A	4.20	400.00	10.50	87.0		
3	100	89	0.0	16.5	N/A	4.20	400.00	10.50	N/C		
4	100	89	91.7	16.5	12.5	4.20	400.00	10.50	N/C		
5	100	89	0.0	16.5	N/A	4.20	400.00	10.50	N/C		
6	100	89	0.0	16.5	N/A	4.20	400.00	10.50	N/C		
7	100	89	0.0	16.5	N/A	4.20	400.00	10.50	N/C		
8	100	89	0.0	16.5	N/A	4.20	400.00	10.50	N/C		

Figure 7-2: Monitor Tab

Step 2. Use the tabs to access the other settings screens.

7.2 Setting the Atlantium System Configuration

You can set the basic system configuration settings on the System Config tab of the Technician Settings screen.

➲ To set the System configuration options:

Step 1. At the top of the screen, press . The **Monitor Tab** is displayed.

Step 2. Press the **Sys Config tab**. The **System Configuration** screen appears.

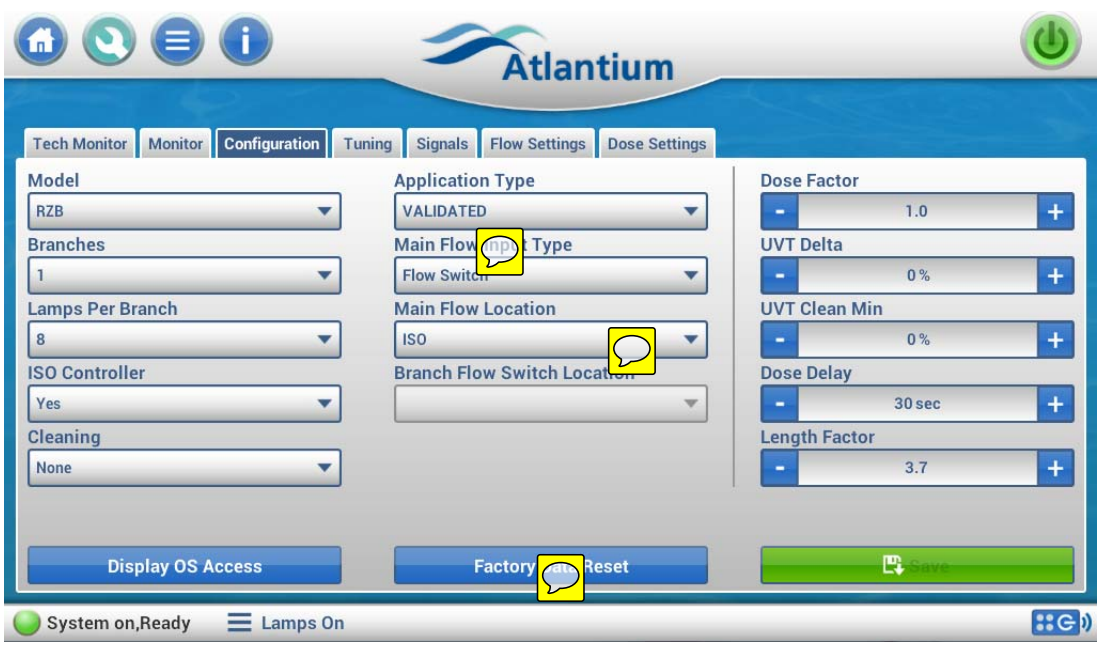

Figure 7-3: Sys Config Tab

Step 3. Under **Model**, press the arrow and from the dropdown list, select the correct Atlantium system installed at the facility.

Step 4. If your Atlantium installation contains systems on more than one branch, under **Branches**, press the arrow and from the dropdown list, select the number of branches.

Step 5. Under **Lamps Per Branch**, press the arrow and from the dropdown list, select the number of lamps installed per branch in the Atlantium system.

Step 6. For **ISO Controller**, press the arrow and from the dropdown list, if the ISO card is present in the **Controller**, select **Yes**; if not, select **No**.

Step 7. Under **Cleaner**, press the arrow and from the dropdown list, select the type of cleaner installed in the Atlantium system. The options are:

- **DPM** (Deposit Prevention Mechanism)
- **US** (Ultrasonic Cleaner)
- **None** (If there is no cleaner installed)

Step 8. In the middle column, under **Application Type**, press the arrow and from the dropdown list, select the correct type of application. The options are:

- **Validated**
- **PMO Pasteurization**
- **PMO Disinfection**
- **EPA On Sync**
- **EPA Off Sync**

Step 9. Under **Main Flow Input Type**, press the arrow and from the dropdown list, select either **Flow Switch** or **Flow Meter**.

Step 10. Under **Main Flow Location**, press the arrow and from the dropdown list, select the component to which the flow meter is connected:

- **ISO** - the **Controller**'s ISO card has the connection
- **Lamp 1 - 8** - select which lamp whose Connection Box card has the connection

Step 11. The system has more than one branch and a flow switch is installed, under **Main Flow Switch Branch Location**, press the arrow and from the dropdown list, select the appropriate branch.

Step 12. In the right column, using the **-/+** buttons, set the desired value for each of the following:

- **Dose Factor** - Relevant for systems with high efficiency.
- **UVT Delta** - For system with DPM only-Sets the minimum allowed UVT.
- **UVT Clean Min** - For system with DPM only-When the minimum allowed UVT is reached, after this time delay, the system issues an alert that a full CIP procedure is to be performed.
- **Dose Delay** - When the minimum dose is reached, after this delay, the system either alerts the customer, moves to a divert valve, or shuts down the water out-flow according to configuration.
- **Length Factor** - The length of the light ray between the lamp and the sensor through the water. This factor is provided by Atlantium per system.

Step 13. To save the changes, press **Save**.

7.3 Configuring the Signals Settings

On the **Signals Settings** screen, you can set the Dry Contact connections for the system's Inputs and Outputs, whether the electronic polarity is **Normally Closed** or **Normally Open**.

Outputs are:

- **Auto Valves** - The facility's electronically-controlled **Inlet** and **Outlet/Ready auto valves**, as well as the **Bypass valve** that control the water supply to the Atlantium unit are to be configured, to receive a control signal from the Atlantium system via the **Controller** (i.e. upon error or other situation), or may re-route the water supply to a different destination (i.e. water bypass system). These valves pertain to various facility processes relevant to the Atlantium system, such as:
  - Assuring that no off-spec water is put into the distribution system (for EPA and PMO versions)
  - Managing high flow conditions
  - Divert requirements
  - Bypassing when the water quality has degraded and the water is going to a different node
  - Bypassing for cleaning chemicals that are not compatible with the quartz chambers

  When the system is activated (either manually via pressing the **Operation** button on the **Controller**'s main screen, or via an external signal utilizing the **External On/Off)**, within **10 seconds**, the **Controller** sends a signal that opens the **Inlet valve**. This signal can also be used to provide feedback that the system is activated.

  When the all the lamps are ignited and ready to use, the **Controller** sends a signal to the **Outlet valve** to open. This signal can also be used to notify that the system is **ready**. The **Controller** also send a signal to the **Bypass valve** to close.

  Similarly, when the system is deactivated, (either manually via pressing the **Operation** button on the **Controller**'s, or via an external signal utilizing the **External On/Off)**, the **Controller** sends a signal that closes the **Inlet** and **Outlet valves**, as well as opens the **Bypass valve**.
- **Alarms and Signals -** To connect the SCADA or a General Alarm mechanism, such as a flashing light, alarm, bell, or a call or message to a telephone. For details about the Alarm signal wiring, see ***Cabling Signal Components*** **on page 5-14**
  - **General Alarm** - To connect a General Alarm mechanism to receive a signal. When configured, in the event that the system experiences an error situation, the configured alarm is triggered.
  - **High Temperature** - To connect a mechanism to receive a signal when system temperature has exceeded the configured maximum.
  - **Low UVT** - To connect a mechanism to receive a signal when the system's UVT has fallen below the configured minimum.
  - **Lost Comm** - not implemented in this version.
  - **Shutdown -** To connect a mechanism to receive a signal when an event causes the system to shutdown.

Inputs are:

- **Flow Switch** - If your system utilizes a Flow Switch, you must configure its electrical polarity in the **Controller**. For the Flow Meter, see ***Configuring the Flow Meter Settings*** on page **7-7**.
- **External On/Off** - A switching mechanism to synchronize the Unit with the facility processes. This remote PLC is turns on/off the Atlantium Unit. For details about the External On/Off signal wiring, see on page **5-9**.

  For example, the facility's SCADA (supervisory control and data acquisition) control system can send a signal to the Unit to start or stop its operation as needed. Using this setting, the Atlantium system recognizes this signal and turn the Unit on or off, as appropriate, without the need for manual intervention.

When the **External On/Off** sends a signal to activate the system, the Atlantium **Controller** sends a response within **10 seconds** that the command was received. If no response was received, it is likely that the **External Operation Button** on the **Controller** main screen was manually press to the **Off** position. Check this button and if needed manually press it to reinstate the **On** position, where as the **External On/Off** can again control the system activation.

For regular wiring set according to the table in ***External On/Off - Additional Notes*** on page **5-22**:

- For **IN+** select **Normally Closed**
- For **IN-** select **Normally Open**

- **Low/Normal Mode** - for systems with an external signal for switching to Low Flow mode.

Other Settings

- **Maximum Temperature Warning** - Since the System shuts down automatically if the water temperature reaches the maximum allowed. You can set the maximum temperature threshold for sending a warning notification so that you can take action to prevent the water from reaching the maximum temperature that triggers shutdown. It is recommended to set this threshold to 5% under the maximum temperature allowed for your system.
- **System Auto Power On** - You can also set the Atlantium system to restart automatically when power is restored after a facility-wide power failure, when it reactivates according to the configured settings via the **Auto Power On** setting.

➲ To configure the Signals settings:

Step 1. At the top of the screen, press . The **Monitor Tab** is displayed.

Step 2. Press the **Signals tab**. The **Signals** screen appears.

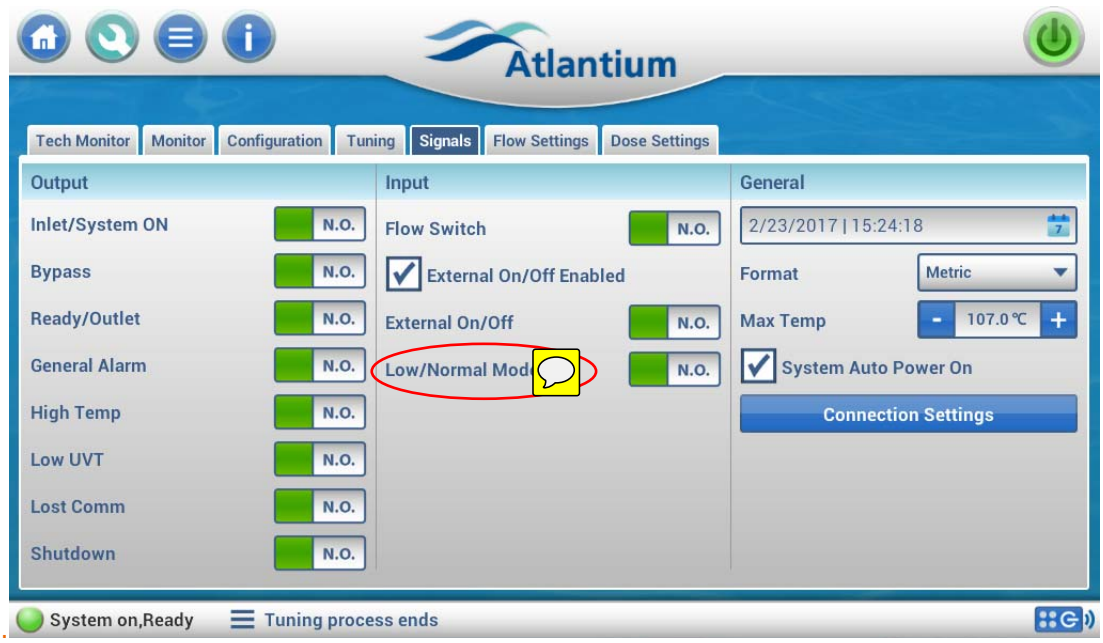

Figure 7-4: Signals Tab

The list of **Outputs** and **Inputs** by default are set to **NC (Normally Closed)**. To change any of them to **NO (Normally Open)**, press the gray box of the Output/Input. It changes to **NO**. If any hardware is changed in your system and you want to change this setting to **NC**, press the gray box of the Output/Input. It changes to **NC**.

Step 3. Under **Output**, set the electrical polarity for:

- **Inlet**
- **ByPass Valve**
- **Ready/Outlet**
- **General Alarm**
- **High Temperature**
- **Low UVT**
- **Lost Comm** (not implemented in this version)
- **Shutdown**

Step 4. Under **Input**, set the electrical polarity for:

- **Flow Switch** (if installed)

- **External On/Off**
- **Low/Normal Mode**

Step 5. To enable the External On/Off, mark the **External On/Of Enabled** checkbox.

Step 6. Under **General,** to set the date and time, press . The **Set Date And Time** dialog box appears.

Step 7. Swipe the date and time elements to toggle to the correct settings.

Step 8. Press **Set**. The correct time appears on the **Output / Input** Tab and is set for the system.

Figure 7-5: Set date And Time Dialog Box

Step 9. To select the format of the date and time, for **Format**, press the arrow and from the dropdown list and select the desired format, **US** for imperial units or **Metric** for metric units

Step 10. For **Max Temp**, using the **-/+** buttons, set the maximum temperature threshold that when reached a warning notification is sent.

Step 11. To enable the system to restart automatically when power is restored, mark **System Auto Power On** checkbox.

7.4 Configuring the Flow Meter Settings

If a flow meter is utilized, the **Controller** data must be configured to match the flow meter at the time the system is originally commissioned, but may need to be changed if a flow meter is changed, etc. The Max Flow setting provides a threshold to compare to the actual flow rate. If the actual flow rate exceeds this set Max Flow value, the system sends notification and triggers an alarm.

- **About the Low Flow Mode**

The Atlantium system's response if a low water flow situation occurs is set via the Low Flow mode. Atlantium's unique feature minimizes the on/off cycles by allowing the system to operate at an extremely low flow value. The Atlantium Application Engineer defines this value according to the specific application. In some cases, this value can be zero flow for a pre-defined period of time. The options are:

- **Flow** – Displays the current flow and can be checked during system operations.
- **Restart** – (Default) The system assumes that low flow is not necessarily a sign of an error and assures that the system is ready to come up to full dose or power immediately when the flow rises.

  Atlantium allows the system to operate at a low flow rate that can be zero for a period of time as defined by Atlantium application engineer. With this setting, we reduce the amount of on/off and keep the integrity of the UV operation, preventing the flow of non-disinfected water into the line.

  As long as the flow rate stays below the **Min Flow** for less than the amount of time set in **Flow Delay**, the Unit continues to operate in standby mode, generally at the lowest possible power.

  However, if:

  - The water flow rate drops below the **Min Flow** rate set here
  - For a time that is longer than the **Flow Delay**, (which is the maximum flow delay set here)
    - The **Low Water Flow** warning is to be triggered
    - The lamps are to automatically shut down
    - An event notification is to be written to the event screen and log file
  - When the water flow rate returns to a level above the **Min Flow**, the Unit automatically and instantly returns to full operation without any operator intervention or delay or cool down/warm up period.

  Selecting **Restart,** the system automatically restarts, requiring no operator action to restart.

  The restart allows the system to start itself automatically upon receiving the flow meter/flow switch signal without having to connect the system to high level controller.

The default values for the minimum flow rate and maximum flow delay appropriate for **Restart** mode are preset by Atlantium. These values may be changed based on local site requirements and conditions, but be sure to coordinate with the Atlantium representative.

- **Shutdown** – If the low flow is a sign of an upstream malfunction, in the event of low flow, the system immediate shuts itself down in an orderly fashion. An alarm is issued and logged. Troubleshoot the cause of the low flow contention before returning the system to normal operation. Operator intervention is required to restart.

  However, if:

  - The water flow rate drops below the **Min Flow** rate set here
  - For a time that is longer than the **Flow Delay**, (which is the maximum flow delay set here)
    - The **Low Water Flow** warning is to be triggered
    - The lamps are to automatically shut down
    - An event notification is to be written to the event screen and log file

After the water is back to the proper Flow rate, the operator must turn on the Atlantium system.

➲ To configure the Flow Meter settings:

Step 1. At the top of the screen, press . The **Monitor Tab** is displayed.

Step 2. Press the **Flow Meter tab**. The **Flow Meter** screen appears. The **Current Flow** indicator displays the current rate of water flowing through the Atlantium system in **GPM** or **M3H (M^{3}H)** units. The **Main Flow Input** indicator displays the **Flowmeter (FM)** or **Flow Switch (FS)** in **GPM** or **M3H (M^{3}H)** units.

Figure 7-6: Flow Meter Tab

Step 3. For **Low Flow Mode**, press the arrow and from the dropdown list, select either **Restart** or **Shutdown**.

Step 4. The default value for maximum flow delay appropriate for **Restart** mode are preset by Atlantium. These values may be changed based on local site requirements and conditions, but be sure to coordinate with the Atlantium representative. If you require changing this value, for **Flow Delay**, using the **-/+** buttons, set the desired value.

Step 5. To ensure that the system does not operate on the basis of a discrepancy in the Current Flow readings, turn off the flow and then check the value for Current Flow. If it is not zero, adjust the **Flow Offset** to this value using the **-/+** buttons.

Step 6. To set the **Flow Factor**, on the flow meter's datasheet, find the meter's maximum-allowed flow rate.

Step 7. For **Flow Factor**, using the **-/+** buttons, enter the meter's maximum-allowed flow rate divided by 100. (If the max flow rate is 100 m^3/h, enter the value **1**. Convert GPM values into m^3/h values to make this calculation.)

Step 8. For **Main Flow Input**, using the **-/+** buttons, enter a value for the maximum water flow rate threshold. If the actual flow rate exceeds this threshold, the system delivers a notification message and an triggers an alarm.

Step 9. To set the action to be performed if the water flow rate exceeds the value set in the **Flow Factor** field. The options are:

- **None** - The event is not considered an error, so no corrective action is taken. No warning message is issued.
- **Warning** - One or more warning messages are issued.
- **Shut-Down** - In case of a serious error or dangerous condition, the system shuts down and triggers a pop-up window message and a General Alarm.

Step 10. For **Max Validated Flow**, using the **-/+** buttons, enter the value for the maximum water flow rate threshold for Validated systems. If the actual flow rate exceeds this threshold, the system delivers a notification message and an triggers an alarm.

Step 11. To set the action to be performed if the validated water flow rate exceeds the value set in the **Flow Factor** field. The options are:

- **None** - The event is not considered an error, so no corrective action is taken. No warning message is issued.
- **Warning** - One or more warning messages are issued.
- **Shut-Down** - In case of a serious error or dangerous condition, the system shuts down and triggers a pop-up window message and a General Alarm.

7.5 Configuring the Dose Settings

The system is set at a particular dose. The Atlantium system maintains the designated dose as conditions allow.

➲ To configure the Dose settings:

Step 1. At the top of the screen, press . The **Monitor Tab** is displayed.

Step 2. Press the **Dose Settings tab**. The **Dose Settings** screen appears.

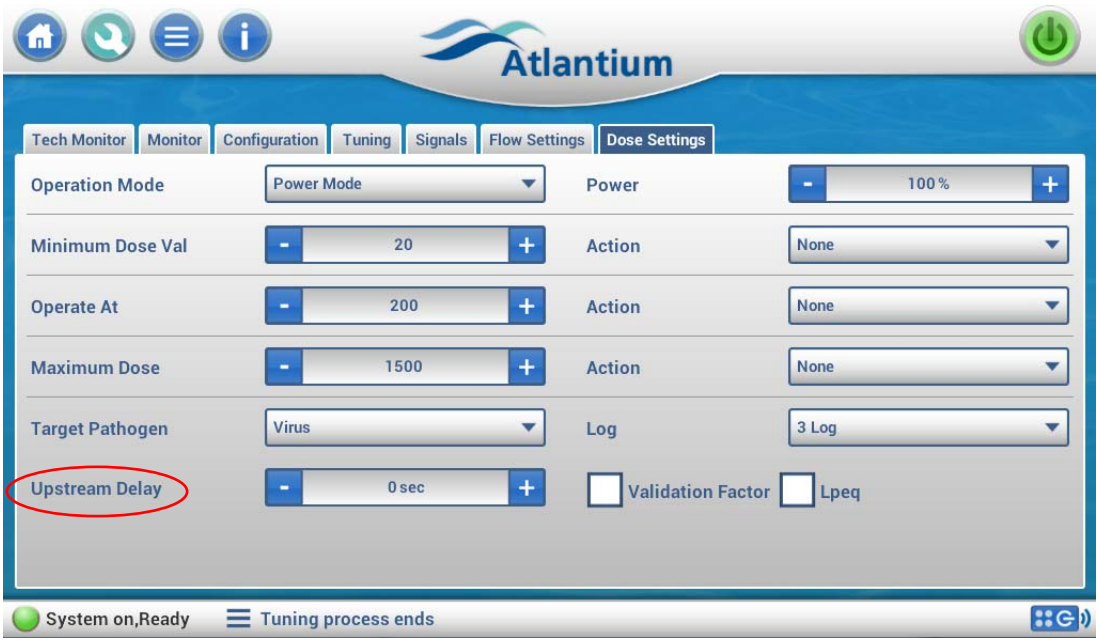

Figure 7-7: Dose Settings Tab

Step 3. For **Operation Mode**, press the arrow and from the dropdown list, select the desired mode:

- **Power Mode**
- **Dose Mode**

Step 4. For the **Operation Mode** to be **Power**, on the right, set to **Power**, using the **-/+** buttons, set the desired power level. The system is set to operate at this power level as a constant. Most operational settings used in Power mode provide information or shut-down the system. The system operates at the prescribed power level and does not change power level to achieve dose settings.

For the **Operation Mode** set to **Dose**, continue with the rest of the settings.

Step 5. For **Minimum Dose Val**, using the **-/+** buttons, set the lowest dose in **mJ/cm^2** units under which you want the needle to move to the red zone to send a warning or shut down.

Step 6. For **Operate at**, using the **-/+** buttons, set the general operating dose in **mJ/cm^2** units under which you want the system to send a warning. When the system is operating with that dose range the needle is in the center of the green zone.

Step 7. For **Maximum Dose**, using the **-/+** buttons, set the maximum UV dose limit in **mJ/cm^2** units, above which you want the system to send a warning or take other action. When the system operates above the maximum dose, the needle is in the dark-green zone.

Step 8. For **Action** corresponding to each of the above settings, press the arrow and from the dropdown list, select the desired corresponding system response in the event that the set power level pushes the dose above or below the set values. The options are:

- **None** - The event is not considered an error, so no corrective action is taken. No warning message is issued.
- **Caution**- One or more caution messages are issued.
- **Shut-Down** - In case of a serious error or dangerous condition, the system shuts down and triggers a pop-up window message and a General Alarm.

The system responds as designated here when, under the current operating conditions and required power level, the dose exceeds or falls below the set values.

Step 1. For **Target Pathogen**, press the arrow and from the dropdown list, select the desired Pathogen either **Virus**, **Giardia**, or **Crypto (Cryptosporidium)**.

Step 2. For **Log**, press the arrow and from the dropdown list, select the appropriate Log Inactivation:

- **3 Log**
- **3.5 Log**
- **4 Log**

Step 3. For systems with divert valve, for **Upstream Delay**, using the **-/+** buttons, set the maximum time it takes for water to empty between the Atlantium system and the divert valve + 20%. For systems with no divert valve, set. this value to 0.

Step 4. For **Validation Factor**, mark the **Validation Factor** checkbox. For no validation factor, leave the checkbox unchecked.

Step 5. For **Lpeq**, mark the **Lpeq** checkbox. For no Lpeq, leave the checkbox unchecked.

7.6 Resetting to Factory Defaults

If needed, you can change any parameters in the configuration due to a new system application, reset the Atlantium system settings to the factory default and configure the system from the beginning. This assures the accuracy of the new configuration. See ***Setting the Atlantium System Configuration*** on page **7-3.**

➲ To reset to factory default settings:

Step 1. At the top of the screen, press . The **Monitor Tab** is displayed.

Step 2. Press the **Sys Config tab**. The **System Configuration** screen appears.

Step 3. At the middle-bottom, press **Reset Factory Def**. All of the settings revert to the factory defaults. All ofthe settings and values in the **Controller** are reset to factory defaults.

7.7 Accessing the Android OS

If you need to access the Android OS, you can display the OS toolbar. When you are finished with the task, you can hide the toolbar again.

➲ To display / hide the Android OS:

Step 1. At the top of the screen, press . The **Monitor Tab** is displayed.

Step 2. Press the **Sys Config tab**. The **System Configuration** screen appears.

Figure 7-8: Sys Config Tab

Step 3. Press **Display OS Access**. The keypad appears.

Step 4. Enter the system password. The OS toolbar appears in place of the System Ready bar at the bottom.

Step 5. To hide the OS toolbar, press **Hide OS Access**. The keypad appears.

Step 6. Enter the system password. The System Ready bar appears in place of the OS toolbar at the bottom.

a

8 First Time System Activation

Following **Controller** configuration, completing the system setup includes the following major steps:

- Cleaning the Atlantium Unit (See below)
- Introducing Water into the Unit (See below)
- Igniting the Lamps (See below)
- Initiating the Water Flow (See page **8-3**)
- Adjusting the Auxiliary Equipment (See page **8-3**)
- System Tuning (See page **8-3**)
- Installation QA (See page **8-3**)

8.1 Cleaning the Atlantium Unit

The inner surfaces of the Atlantium Unit are to be cleaned via the CIP process at installation, before starting up and proceeding with the commissioning phase. Follow the directions in ***Cleaning In Place (CIP)*** on page **10-2**.

8.2 Introducing Water

The water is introduced into the unit before full activation.

Water hammer can cause damage to any hydraulic system, including the Atlantium Unit. **Make sure that water hammer is NOT present in your facility's water line.**

To prevent water hammer, consult your system engineer and check your facility system procedures, including:

- When starting the water flow when the lines are empty, keep valves open so that the air in the pipes has a simple release pathway.
- Sudden valve closures can cause water hammer. Make sure that valves close gradually enough to avoid this problem.
- Ensure that all pumps that impact the Atlantium system employ soft start-up procedures.

➲ To introduce water:

- Open the **Inlet valve** and using the **Viewport** on the Unit, check that the quartz chamber fills with water completely.

8.3 Igniting the Lamps

The lamps of the Atlantium Unit are ignited to commence live system operation.

- **Temporarily, the caps on the lamps must be open, During this time, use Caution floor signs at a distance of 1m/40inch from the Atlantium Unit that warn passersby against possible UV light exposure and not to approach without proper eye and skin protection.**
- Wear white cotton gloves.
- Wear long sleeves rolled down to your wrist.
- Where appropriate eye protection, such as containing polycarbonate lens that meet EN166, CAN/CSA-Z94.3-02 and/or Z87.1 standards.
- **DO NOT look directly into openings that emit UV light.**

➲ To ignite the lamps:

Step 1. **Temporarily place Caution floor signs at a distance of 1m/40inch from the Atlantium Unit that warn passersby against possible UV light exposure and not to approach without proper eye and skin protection.**

Step 2. Open each of the lamp's caps (2 on each side of a lamp). For the location of the lamps' caps, see Figure **10-12** , on page **10-15**.

Step 3. At the top of the screen, press . The button turns green. Wait 10 minutes for lamps to turn on and the system to stabilize.

Step 4. At the top of the screen, press . The **Monitor Tab** is displayed.

Step 5. Press the **Monitor Tab**. The **Monitor** screen appears.

Lamp ID	Power %	Status %	UVT %	UVIS mA	UVTS mA	Lamp kW	Lamp V	Lamp A	Temp F	On Off	Lamp Enabled
1	100	54	98.6	16.5	12.5	4.20	400.00	10.50	N/C		✓
2	100	89	0.0	16.5	N/A	4.20	400.00	10.50	87.0		✓
3	100	89	0.0	16.5	N/A	4.20	400.00	10.50	N/C		✓
4	100	89	91.7	16.5	12.5	4.20	400.00	10.50	N/C		✓
5	100	89	0.0	16.5	N/A	4.20	400.00	10.50	N/C		✓
6	100	89	0.0	16.5	N/A	4.20	400.00	10.50	N/C		✓
7	100	89	0.0	16.5	N/A	4.20	400.00	10.50	N/C		✓
8	100	89	0.0	16.5	N/A	4.20	400.00	10.50	N/C		✓

Figure 8-1: Technician Settings Screen> Tech Monitor Tab

Step 6. For each lamp in the system defined in the **Lamp ID** column, In the a corresponding **Lamp Enabled** column on the right, make a checkmark. The Lamp's **On/Off** icon turns grey. Check that the lamps are indeed on. Check that the values for the other columns are in normal range.

Step 7. At the top-left of the screen, press the **Event Log** screen is displayed. The Event log screen is displayed. Verify that an Event log item showing that the lamps have been ignited is displayed. The event may take a few seconds to appear on the screen.

Step 8. Let the system operate for at least one hour.

Step 9. Continue with Section **8.4** and Section **8.5** below. There is no need to wait for the system to complete the first hour's operation.

Step 10. Close all of the lamps' caps and remove the Caution floor signs.

8.4 Initiating the Water Flow

When initiating the water flow, the water may be set to drain out or collect in a tank until the system is fully operational. Once the entire installation and QA testing is complete, the water is set to flow normally as part of the facility operation.

➲ To initiate the water flow:

Step 1. Open the relevant valve that allows water to flow through the Atlantium unit. This may be the draining valve or bypass valve.

Step 2. Open the viewport and verify that the Unit is completely filled with water and that no air gaps and no air bubbles exist.

Step 3. On the main screen of the **Controller**, verify that the **Flow** reading at the bottom is within normal range. If it is not, check the connections between the Atlantium system and the Flowmeter/Flow Switch. See ***Cabling Components*** on page **5-13.**

Step 4. On the Controller, verify that the Flow reading on the right is within normal range. If it is not, check the connections between the Atlantium system and the Flow meter. See ***Cabling Components*** on page **5-13.**

8.5 Adjusting the Auxiliary Equipment

All relevant auxiliary equipment must be adjusted at this time, i.e., flow meter, automatic valves, PLC, etc. Refer to the manufacturers' user documentation of the relevant equipment.

If your configuration includes a flow meter, check that the value of the flow displayed on the **Controller** matches the reading on the flow meter. See page **7-7** if they do not match.

8.6 System Tuning

The Atlantium system must be tuned via the **Controller**. Follow the instructions in ***System Tuning*** on page **10-44**.

8.7 Installation QA

Atlantium personnel performs a quality assurance procedure following which the Atlantium system is ready for regular facility operation.

9 Operating the Atlantium System

This section details how to operate the system and handle basic and periodic routines to be carried out by Atlantium trained the local staff.

For system without **TRAC software** and/or optional **Cleaning**, disregard the irrelevant sections.

- Unauthorized servicing or modification of this system in a manner not specified in this manual could expose personnel to potential electrical or other hazards.
- Improper use or adjustment of this system may invalidate the service warranty agreement.

9.1 Operational Guidelines

Follow these guidelines for smooth Atlantium System operations:

- **Incoming Water Supply** - Be alert about incoming water supply. If you do not have pre-treatment, be alert to reports of contamination by upstream slugs of mud, particles, oil, etc.

  If the water source was not previously in operation or the line is new, - flush the line prior to introducing water into the Atlantium system
- **Avoid chemicals that are harmful to UV systems** - Avoid caustic soda and other corrosive chemicals that can degrade gaskets and o-rings
- **Prevent Water Hammer** - Water hammer can cause damage to any hydraulic system, including the Atlantium unit. Take steps to ensure that this phenomenon does not occur in your facility's water line. To prevent water hammer, consult your system engineer and check you facility system procedures for following:
  - Avoid filling empty lines with water without keeping valves open for releasing the air from the pipes and the system.
  - Avoid rapid closure of water lines by sudden closure of valves.
  - Before introducing the water, ensure that all pumps that impact the Atlantium system employ soft start-up procedures.
- **Avoid vibrations on upstream and downstream piping** - Make sure that the piping to be attached to the Atlantium Unit is reinforced to protect the Unit against vibration.
  - A high vibration level can cause damage to any hydraulic system, including the Atlantium unit.
  - High vibration can be caused by an unbalanced pump or by sudden valve close.

9.2 Basic Operational Tasks

- Shutting down the Atlantium system - See below
- Starting up the Atlantium system - See page 9-2
- Taking microbial samples - See page 9-6

9.2.1 Shutting Down the Atlantium System

You can shut down the Atlantium system via the **Controller**.

➲ To shut down the Atlantium system:

Step 1. In the **Controller**, on the top of the screen, press . The button turns grey. Wait approximately three minutes for the **Ready Lamps On** signal to transmit.

Step 2. Using the viewport on the Atlantium Unit, check that the lamps are indeed turned off.

Step 3. Check the main screen of the **Main Operations** and verify that the system parameter for **Power** is **0%**.

9.2.2 Starting up the Atlantium System

You can start up the Atlantium system via the **Controller** and then check the water and system parameters.

➲ To start up the Atlantium system:

Step 4. Check that the power cable of the Ballast Modules is connected to the main power source.

Step 5. Connect the power cable of the Controller to the main power source.

Step 6. Using the attached key, open the screen panel of the **Controller**.

Step 7. Locate the circuit breaker and turn it to the **On** position.

Step 8. In the **Controller**, on the top of the screen, press . The button turns green. Wait 10 minutes for lamps to turn on and the system to stabilize.

Step 9. Open the viewport and check that there are no air bubbles in the water flow. If necessary, release all air bubbles from within the system.

Step 10. Check the main screen of the **Main Operations** and verify that the Atlantium system parameters for **Power**, **Flow**, and **UVT** are within wanted acceptable range (see the table below to enter your expected values).

Notify the executive maintenance engineer in case the values are out of range.

Table 9-1: Abbreviation of Table in **Appendix 11**. ***Checking the System Parameters***

	Parameter	Expected Value	
		Minimum	Maximum
1	Power		
2	Flow Rate		
3	UVT		
4	UV Dose		
5	Lamp Status		

For periodic checks on Atlantium system parameters, a convenient check list is supplied in **Appendix 11**, ***Checking the System Parameters*** .

9.3 Viewing the Event Log

Every defined event is written to the event log of the **Controller**

➲ To view the Event log:

Step 1. At the top of the screen, press the **Event Log** screen is displayed.

Step 2. To navigate through the log, swipe down the Event list.

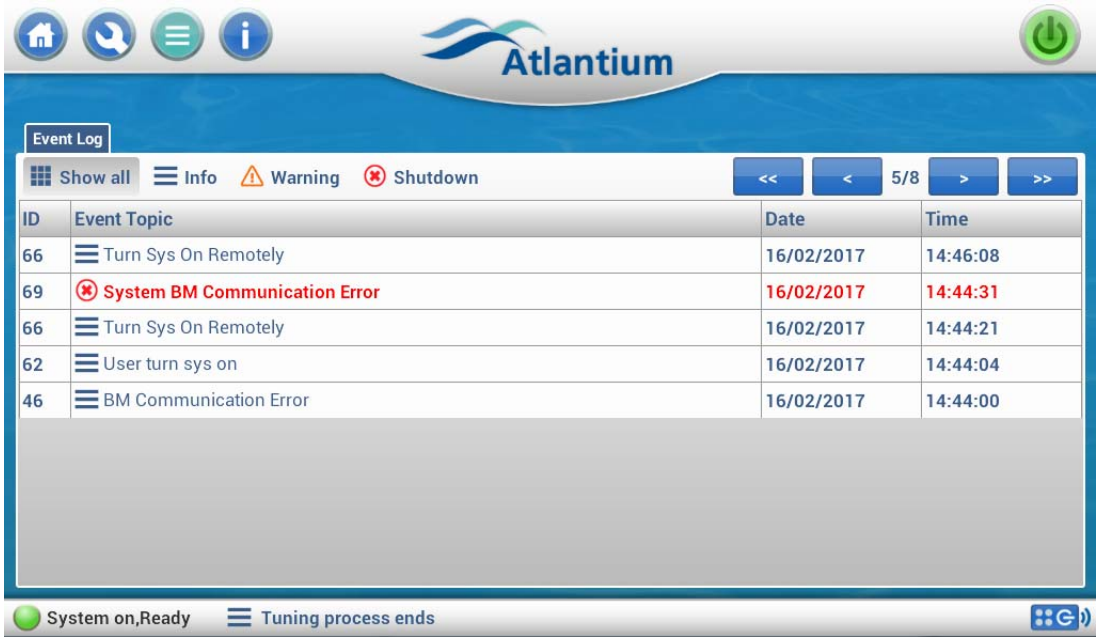

Figure 9-1: Event Log Screen

Step 3. To view more information about a single event, press the event. The event item expands to display the full information, including reading for System Power, Dose, Flow, Status, UVT, and Temperature at the time the event occurred.

9.4 Viewing System Information

You can view general information about the system in the **System Info** tab.

➲ To view generic information:

- At the top of the screen, press . The **System Info** screen is displayed, containing the following information:
  - Power in %
  - Status in % (Average system status)
  - UVT in %
  - Temp (Temperature)
  - Dose in gpm or h^3/m
  - Software version (of the **Controller**)
  - ISO version (of the **Controller** card)
  - Per lamp
    - Status in %
    - Age in hours
    - Number of ignitions
    - State: On, Ignition, or Off
    - Reset button

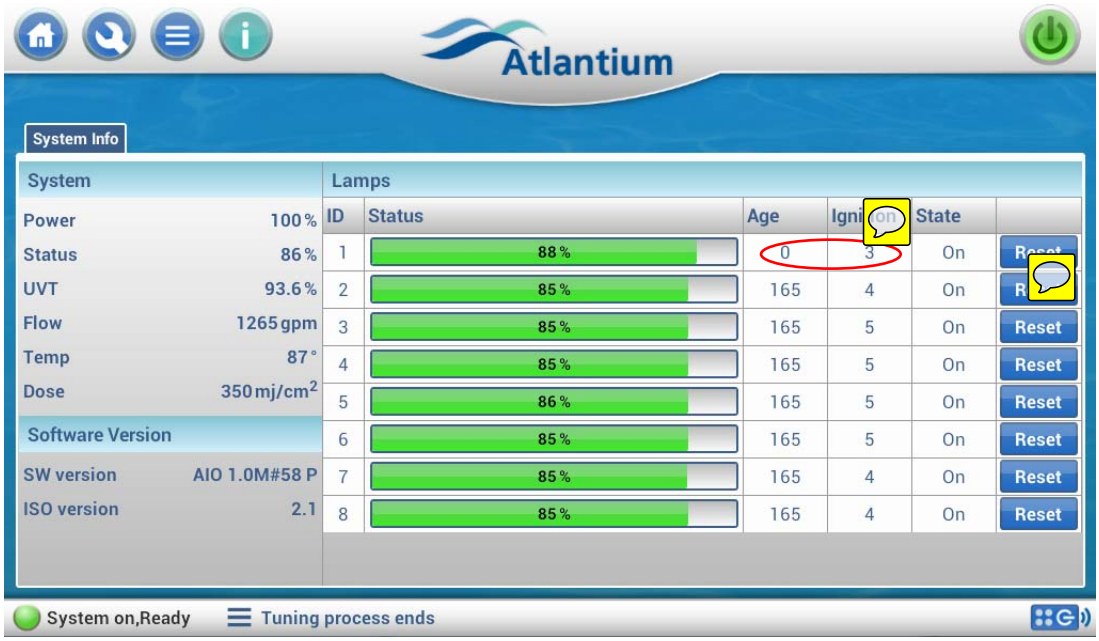

Figure 9-2: System Info Screen

9.5 Taking Microbial Samples

The designated aseptic sampling valves (i.e., EGMO ESV valves) are the **Inlet** and **Outlet Sampling Points** located on the sides of the Atlantium Unit. Before taking a microbial sample, a valve is sterilized internally with Ethanol 70%, as well as with flame.

Required Equipment

- Sampling containers that are clean, laboratory-grade, sampling bottles with a volume no less than 100ml (3.38oz).
- Ethanol 100-70%
- Bunsen Burner and lighter
- Permanent marker
- Sterile gloves
- Proper Sampler attire according to local laboratory protocol

- Use gloves during sampling and treat them with Ethanol 70%.
- Use **sterile disposable** sampling containers.
- Prevent contact between the sampling containers and the valves' surfaces.
- Be sure that no foreign matter or liquids fall into the sampling containers.
- Perform the sample collection as fast as possible to minimize environmental contamination of the sample.
- **Use open flame to treat the surrounding air while sampling.**

➲ To take a microbial sampling:

Step 1. Open the Sampling valve and allow water to flow for 2-3 minutes. Then close the valve.

Step 2. If the sampling valve contains a cover at the top, open its cover and place it in a clean place.

Step 3. Spray all over the Sampling valve and inside it thoroughly with Ethanol 70%.

Step 4. Using a Bunsen burner, apply the flame comprehensively over the entire Sampling valve surface from its connection to the main pipe to its spout.

Step 5. Spray the cap thoroughly with Ethanol 70% and place it on the Sampling valve.

Step 6. Open the valve and allow the water to flow for 2 minutes. If you have applied the flame properly, vapor emerges from the spout. (If there is no vapor, application of the flame was insufficient. Repeat the previous step.)

Figure 9-3: Cleaning the Sampling Valve with Ethanol

Make sure never to touch the opening at the Sampling container's neck.
While the Sampling container is open, do not turn the cap upside down.

Step 7. On the Sampling container, with one hand, remove its cap carefully, avoiding touching the inside of the cap with fingers or any other object. **Do not turn the cap upside down.**

Step 8. With your other hand position the Sampling valve under the water stream and take a water sample. Make sure never to touch the valve's opening or the opening at the container's neck. Fill the sampling container, leaving ample air space in bottle (at least 2.5 cm).

Step 9. Carefully replace the container's cap and tighten it to avoid cross contamination.

Figure 9-4: Taking a Sample

Step 10. Labeled the Sampling container with the following data:

- Sampling site
- Sampling point
- Sampler name
- Date the sample is taken

Step 11. Close the Sampling valve.

Step 12. Spray the sampling container thoroughly with Ethanol 70%.

Step 13. Store the water samples in a dark, refrigeration unit at a temperature of 2-8oC (35.6-46.4oF) until they are examined.

9.5.1 Microbial Analysis Guidelines

The microbial analysis is to be conducted according to the company guidelines which are used in the local microbiology laboratory.

- Atlantium's recommendation is to use the microbial filtration method for the testing.
- If a number of consecutive anomalous microbiological results are obtained in one of the sampling points, take the samples only after performing CIP with a disinfection chemical (peracetic acid is recommended). It is important to let the chemicals clean and sanitize the aseptic valves, as well by letting the cleaning solution flow through them. See ***Cleaning In Place (CIP)*** on page **10-2.**
- In the event that system outlet counts are higher than the inlet counts, the results are to be considered as a sampling error.
- In the event that the microbial counts are not proportional in different dilutions, the results are to be considered as a laboratory error.
- For further guidance regarding microbial sampling and analysis, contact the Atlantium Application department.

10 System Maintenance

To keep the Atlantium system in peak form, preventive and periodic routine maintenance is essential. During commissioning, Atlantium trains your local staff how to do the tasks on a prescribed schedule or as needed.

WARNING!

- Unauthorized servicing or modification of this system in a manner not specified in this manual could expose personnel to potential electrical or other hazards.
- Improper use or adjustment of this system may invalidate the service warranty agreement.

Before you begin a procedure, carefully read through it so that you can anticipate the steps efficiently.

The periodic routine maintenance schedule is:

- Weekly Maintenance Tasks:
  - Walk-Around Inspection Tour - see below
- Monthly Maintenance Tasks:
  - Checking the Ballast Module Cooling Fans (See page **10-9**)
  - Checking the Temperature Sensor Reading (See page **10-9**)
- Yearly Maintenance Tasks:
  - Cleaning the Quartz Tube (See page **10-20**)
  - Replacing the Quartz Tube O-rings (See page **10-20**)
- Maintenance Tasks Performed as Needed:
  - Cleaning In Place (CIP) (See page **10-2**)
  - Replacing a Lamp (See page **10-10**)
  - Checking/Replacing a Sensor (See page **10-24**)
  - Testing System Lamps (See page **10-25**)
  - Tuning the Atlantium System (See page **10-26**)
  - Checking/Replacing the Quartz Tube (See page **10-20**)
  - Cleaning/Replacing a UVIS Wave Guide (See page **10-17**)
  - Cleaning/Replacing a UVIS Mirror (See page **10-19**)
  - Replacing the Temperature Sensor (See page **10-29**)
  - Replacing the Temperature Converter Card (See page **10-30**)
  - Replacing the Connection Box Card (See page **10-30**)

10.1 Walk-Around Inspection Tour

Perform Weekly

Walk-Around and inspect the Atlantium system once a month to check for water leaks, visible damage to the cables and harnesses, or any other part of the system. Report any problem you find to an authorized technician.

➲ To perform a Walk-Around inspections:

Step 1. Walk around the Atlantium unit and inspect it. Look for leakage at the incoming and outgoing pipes.

Step 2. Inspect the **Cable Harness** and cables running between the Unit and the Ballast Module(s) and Controller for signs of fraying and any other visible damage.

Step 3. Inspect the Ballast Module(s) and Controller for any signs of damage.

Step 4. Report any leakage or damage to an authorized technician immediately.

10.2 Cleaning In Place (CIP)

Performed as needed

The CIP procedure consists of two parts:

- Cleaning to remove the accumulated deposit (particles) that collect on the quartz tube over time
- Disinfectant cleaning to sterilize the quartz tube (not applicable to some Municipal installations)

Clean the Atlantium Unit's inner surfaces and quartz tube generally on a periodic basis that is determined by observing that the performance is on target and the UVT Sensor readings are stable. You can clean using this process less frequently, depending on the specific chemistry of your water.

A CIP recirculation system is available from Atlantium as an optional CIP Kit. Connect the recirculation system to the CIP ports to create a closed-loop flow line that pumps a diluted solution through the Unit.

The estimated time for a CIP process is 1.5 hours.

Prepare the following:

- Protective chemical-safe goggles, clothing and gloves
- An external pump-driven recirculation system with a built-in 100 liter reservoir (26.5 US gallons) or Atlantium's CIP Kit including its accessories (See ***Sampling Valve Components and Kits*** on page **3-14.**)
- Cleaning solution (See below)
- Disinfectant cleaning solution (not applicable to some Municipal installations) (See page **10-4**)

10.2.1 Selecting the Correct Chemicals for CIP

It is **critically important** to select the correct cleaning and disinfecting chemical for the CIP process. It must be powerful enough to clean the inner surfaces of the Atlantium unit, while at the same time:

- Does not harm the components of the Unit that it comes into contact with (stainless steel 316, quartz and Viton® o-rings).
- Does not contaminate the product for which the water being treated by the system is used.

- The chemicals selected and the concentrations used must be approved for use by the facility's quality assurance and safety officials, and must comply with the written protocols and procedures set in place by those departments.
- Use and handle in strict accordance with their manufacturer's instructions, product information sheets, and material safety data sheets (MSDS).
- It is strictly forbidden to use of NaOH (Caustic Soda) as it causes irreversible damage to the quartz. Any use of this material requires an analysis of temperatures, concentration, frequency and duration and written approval from Atlantium's application engineer.

- All chemicals must be obtained locally.
- Atlantium does not supply chemicals - get them locally from commercial chemical suppliers.

Recommended Cleaning Solutions

The following chemicals have been tested and found to be very effective for cleaning and are recommended for use when cleaning the Atlantium system:

- Phosphoric acid (H_3PO_4) 2% diluted solution
- Nitric acid (HNO_3) 2% diluted solution
- HCl 2% diluted solution - recommended for metal based (rust-colored) deposits
- Sulfamic acid (H_3NSO_3) 1.5% diluted solution - recommended for calcium based deposits

Recommended Disinfectant Solutions (not applicable to some Municipal installations)

(The Disinfectant CIP process is not applicable to some Municipal installations)

The following have been tested and found to be very effective for disinfection and are recommended for use when disinfecting the Atlantium system:

- Peracetic acid-based chemicals - 30 min. contact time, for example:
  - P-3 Oxonia Active 150 - 0.5% diluted solution according to manufacturer's recommendation
  - Divosan Forte - 0.5% diluted solution according to manufacturer's recommendation
- Hot water at 85°C (185°F) for 30 min.

The use of any other cleaning and disinfection chemicals requires Atlantium’s approval.

DO NOT use caustic soda in the Atlantium system. If your facility uses caustic soda in a CIP process, use a by-pass line to prevent caustic soda contact with the Atlantium unit.

10.2.2 Preparing the Chemical Solution

For both cleaning and disinfecting, the liquid in the reservoir must contain the desired percentage of the chemical additive (see above). Therefore, the purchased chemical solution must be diluted and added to the reservoir. Calculate the correct amount of chemical solution to be used for the CIP process.

Protect yourself from the ill-effects of chemicals with protective chemical-safe goggles, clothing and gloves.

- The concentrations refer to room temperature.
- The diluted solution values denote the required dilution of the chemical circulating through the Atlantium Unit.
- While calculating the diluted volumes, consider all volumes including the Unit, pipes and the recirculation reservoir.*

➲ To calculate the correct amount of chemical solution:

Step 1. Calculate the total volume you need for the CIP* by adding the water volumes in:

- The Atlantium unit volume (measurements in liters/gallons) - Refer to the ***Physical Specifications*** Table in ***Atlantium System Footprint*** on page **2-3**
- The pipes between the Atlantium Unit and the **Inlet** and **Outlet Valves**
- The CIP recirculation system
- The hoses between the Unit and the recirculation system

Step 2. Calculate the amount of chemical additive to be added to the reservoir to achieve the desired dilution. Use this formula:

$$C = \frac{A * V_t}{B}$$

A - The target concentration for the liquid (chemical substance + water) in %
B - The concentration of the chemical substance to be added in %
C - Volume of the chemical substance to be added in liters/gallons
V_t - Volume of the water in the Unit + piping + CIP Reservoir (as described above*) in liters/gallons

* If you intend to collect the solution into the CIP reservoir or other container, the total volume of the cleaning solution must not exceed the volume of the CIP reservoir or container.

Be sure to obtain from an engineer the correct calculation for the amount of chemicals to be used for the process you intend to use.

10.2.3 Performing CIP

The CIP process is performed utilizing fresh water. For systems with sea water, drain the system and rinse before preforming CIP.

This section details the CIP process with recommended steps for carrying it out. The procedure is to be adapted according to the specific circumstances of your installation.

The CIP process is to follow these major steps:

Step 1. Shutdown the Atlantium system

Step 2. Close the inlet and outlet valves

Step 3. For systems with sea water, drain the system
Step 4. Remove the caps covering the CIP ports
Step 5. Connect the supply hose to the bottom CIP port and connect the return hose to the top CIP port
Step 6. Fill the CIP reservoir with fresh water
Step 7. Starting the circulation
Step 8. Adding the chemical solution
Step 9. Running the CIP circulation
Step 10. Draining the system and CIP cart
Step 11. Rinsing the system and the CIP cart
Step 12. Performing CIP Disinfection
Step 13. Ending CIP and draining the system
Step 14. Refilling the system
Step 15. Returning power to the lamps

The CIP diagram below is followed by the full recommend CIP procedure.

CIP Setup

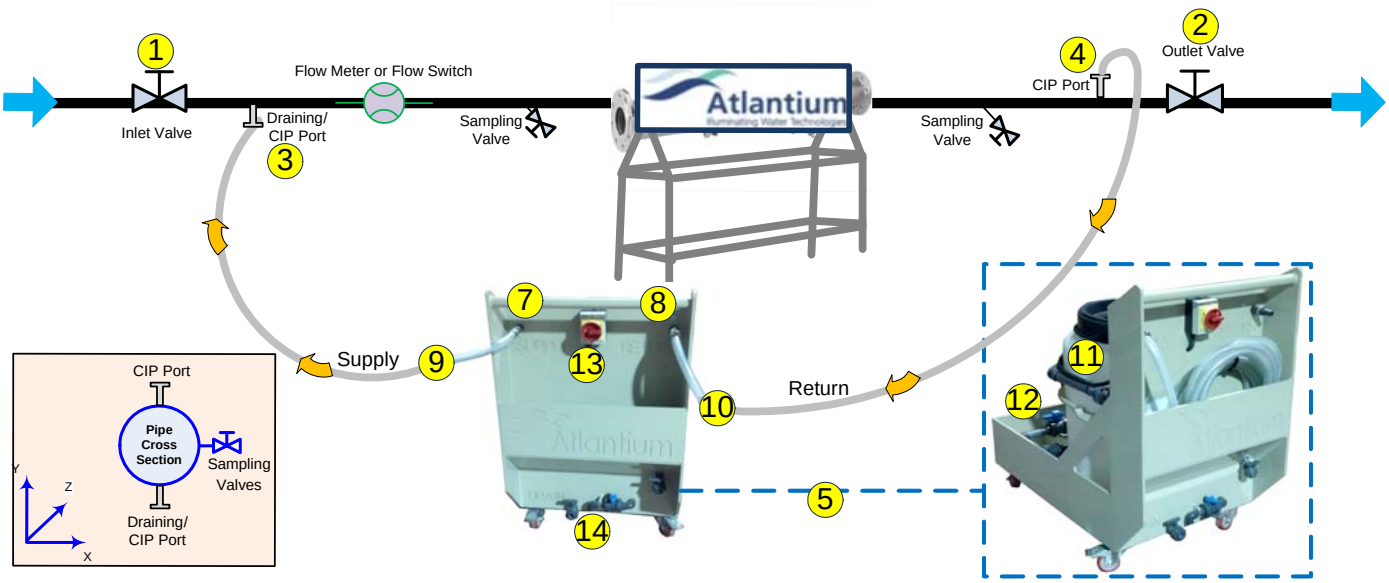

Figure 10-1: Recommended CIP Setup

If the installation is vertical, the water flow is from bottom to top. The Draining/CIP port **(3)** is on the bottom, under the Atlantium Unit and the CIP port **(4)** is above the Atlantium Unit.

➲ To Perform CIP:

Shutting Down the System

Step 1. Shut down the Atlantium system, on the **Controller**, by pressing the **Main ON/OFF Operation** button in the upper-right corner.

Step 2. On the Connection Box next to each lamp, turn the switch to the **Off** position.

Step 3. Close the Unit's inlet isolating valve **(1)** and outlet isolating valve **(2)**.

Step 4. Remove the caps **(D)** covering the bottom and top CIP ports **(3 & 4)**. Place the caps in a safe place for reuse later. Verify that the gasket **(B)** is still inserted into the ferrule.

Step 5. For systems with sea water, drain the system. You can use the bottom CIP/Draining port for this purpose.

Make sure that the hose fittings are secure and tight.
Water must fill the entire path through the piping on both sides of the Atlantium Unit and the Unit itself, as well as the Supply and Return hoses and the CIP Kit's reservoir.

Connecting the CIP Hoses

Step 6. Remove the hoses from their pocket on the Cart.

Step 7. Using the CIP cap's clamp **(A)**, connect the CIP Kit's Supply hose **(9)** to the bottom CIP port **(3)**. Verify that the gasket **(B)** is present.

Step 8. Connect the CIP Kit's Return hose **(10)** to the top CIP port **(4)**. Verify that the gasket **(B)** is present.

Figure 10-2: The clamp is closed

Figure 10-3: The clamp is opened around the CIP port /gasket /cap

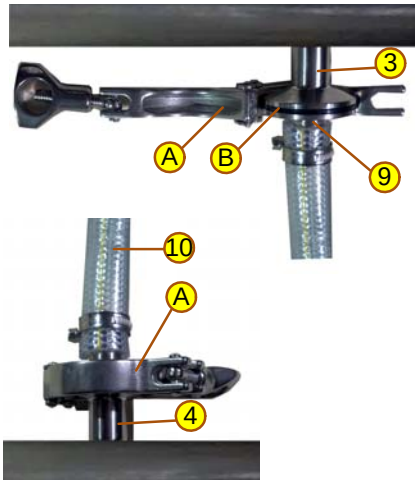

Hose connection to Bottom and Top CIP Ports

Filling the CIP Reservoir

Step 9. To fill the CIP reservoir **(A)** with water:

- **Filling option 1:**
  - Slightly open the Unit's inlet isolating valve **(1)** and open the top CIP port on the outlet side **(4)** and allow the facility's water to fill the CIP Kit's reservoir **(11)**.
  - There is a full line indicator on the reservoir **(11)**. Make sure the water in the reservoir is up to the 100 liter (26.5 US gallons) level.
    - Close the Unit's inlet isolating valve **(1)**.
    - If the CIP port **(4)** is a valve, close it.
- **Filling option 2:**
  - Open the top cover of the CIP Kit's reservoir **(11).**
  - Using a hose of an external water source, fill the reservoir with 100 liter reservoir (26.5 US gallons of room-temperature tap water (±25°C/75°F).
  - There is a full line indicator of the reservoir. Make sure the water in the CIP Kit's reservoir **(11)** is at the 100 liter reservoir (26.5 US gallons level.
  - Close cover.

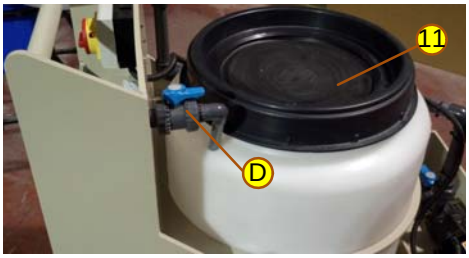

Figure 10-4: CIP Kit's Reservoir

Figure 10-5: CIP Cart's Inlet and Drain Port

Starting the CIP Circulation Process

Step 10. If the bottom and top CIP ports **(3 & 4)** are valves, open them.

Step 11. To start the CIP recirculation pump, on the CIP cart, turn the switch **(13)** to the **On** position and allow the solution to circulate through the Unit for **the period of time specified in the chemical's Use instructions, but not less than 30 minutes**.

Step 12. Verify that the Atlantium Unit is full of water and that the water is circulating correctly.

Adding the Chemical Solution

Protect yourself from the ill-effects of chemicals with protective chemical-safe goggles, clothing and gloves.

Step 13. Turn the switch **(13)** to the **Off** position and open the top cover of the CIP Kit's reservoir **(11)** and add the prepared chemical solution to the water in the reservoir. (See ***Selecting the Correct Chemicals for CIP*** on page **10-2.**)

Step 14. To start the circulation again, turn the switch **(13)** to the **On** position.

Step 15. **When performing the CIP process for disinfecting,** as the solution is circulating through the Unit, open the sampling valves and let the water through it to make sure they also get full of CIP chemical solution.

Step 16. After the chemical solution has circulated through the Unit for a sufficient duration, it must be drained from the system.

- **If local regulations permit, and a physical drain setup exists**, drain the chemical solution to the facility's sewage system:
  - **a** Close the inlet bottom CIP port **(3).**
  - **b** To stop the CIP recirculation, on the CIP cart, turn the switch **(13)** to the **Off** position.
  - **c** Open the CIP cart's drain valve **(C)**. The water with the chemical solution begins to drain out.
  - **d** Connect the CIP cart's drain valve **(C)** to the facility's sewage system.

Or,

- **According to local regulations, use the Draining/CIP port to drain the solution in the system into a external container.**

Or,

- **Use the CIP reservoir (11) to collect the chemical solution**.
  - **a** Close the inlet bottom CIP port **(3).**
  - **b** To stop the CIP recirculation pump, on the CIP cart, turn the switch **(13)** to the **Off** position.
  - **c** Allow the chemical solution to drain entirely into the CIP reservoir **(11)**.
  - **d** Dispose of the contents according to regulations. Connect a drain pipe to the CIP cart's drain pipe and open the CIP cart's drain valve **(C)**. The water with the chemical solution begins to drain out.
  - **e** Disconnect and close the CIP cart's drain valve **(C)**.

Rinsing the System and CIP Kit

Step 17. To rinse the Atlantium system thoroughly, slightly open the inlet valve **(1)**.

Step 18. Open the CIP cart's drain valve **(C)** and completely drain the CIP reservoir **(11)**.

Step 19. Using an external water source, rinse the CIP cart's reservoir, letting the rinse water drain out of the CIP cart's drain valve **(C)**.

Step 20. Open the Inlet valve **(1)** and refill the Atlantium Unit with water. When full, close the Inlet valve **(1)**.

Step 21. Refill the reservoir (see **Step 9.** above.)

Step 22. To start the circulation again, turn the switch **(13)** to the **On** position.

Step 23. Let the rinse water circulate a few times.

Step 24. Drain the system again according to **Step 16.** above.

Step 25. To assure that all of the chemicals are flushed out of the system, draw some water from the Sampling valve and test it using an appropriate indicator for the chemical used, such as measuring the pH, consult you chemical supplier).

Step 26. Close the CIP cart's drain valve **(C)**.

Performing CIP Disinfection

Step 27. If you are planning to perform an additional CIP process using the disinfectant solution, refer to ***Preparing the Chemical Solution*** on page **10-4** and follow the CIP process again from ***Filling the CIP Reservoir*** and **Step 9.** above.

Or,

- To return to normal operating status, proceed to the next step.

Ending CIP and Draining the System

Step 28. Detach the Supply and Return hoses from the CIP ports **(3** and **4)** and clamp **(A)** them closed with their caps **(D)**.

Step 29. Open the isolating outlet valve **(2)**.

Step 30. To avoid hammer effect if there is air trapped in the system, carefully open the inlet valve **(1)** completely and resume normal operation.

Step 31. To drain out any water inadvertently collected in the CIP cart's storage pocket or base, use the CIP cart's drain valves **(A** and **B)**.

Step 32. Roll up the CIP Kit's hoses and return them to their storage pocket **(F)**.

Refilling the System

Make sure that the Atlantium Unit is filled with water before powering it up and turning on the lamps.

Step 33. Turn on the Atlantium system at 100% power and wait until the system has stabilized and indicates that it is ready.

Returning Power to the Lamps

Step 34. On the Connection Box next to each lamp, turn the switch to the **On** position.

Step 35. Turn on the Atlantium system, on the **Controller**, by pressing the **Main ON/OFF Operation** button in the upper-right corner.

10.3 Checking the Cooling Fans

Perform Monthly

Once a month the cooling fans of the Ballast Modules must be checked to verify that the air is flowing out.

➲ To check the cooling fans:

- Check that air is being blown out of the fan on top of the Ballast Module.

10.4 Checking the Temperature Sensors' Readings

Perform Monthly

Once a month both temperature sensors must be checked to verify that they are working properly.

➲ To check the temperature sensors' readings:

Step 1. At the top of the screen, press the **System Info** screen is displayed.

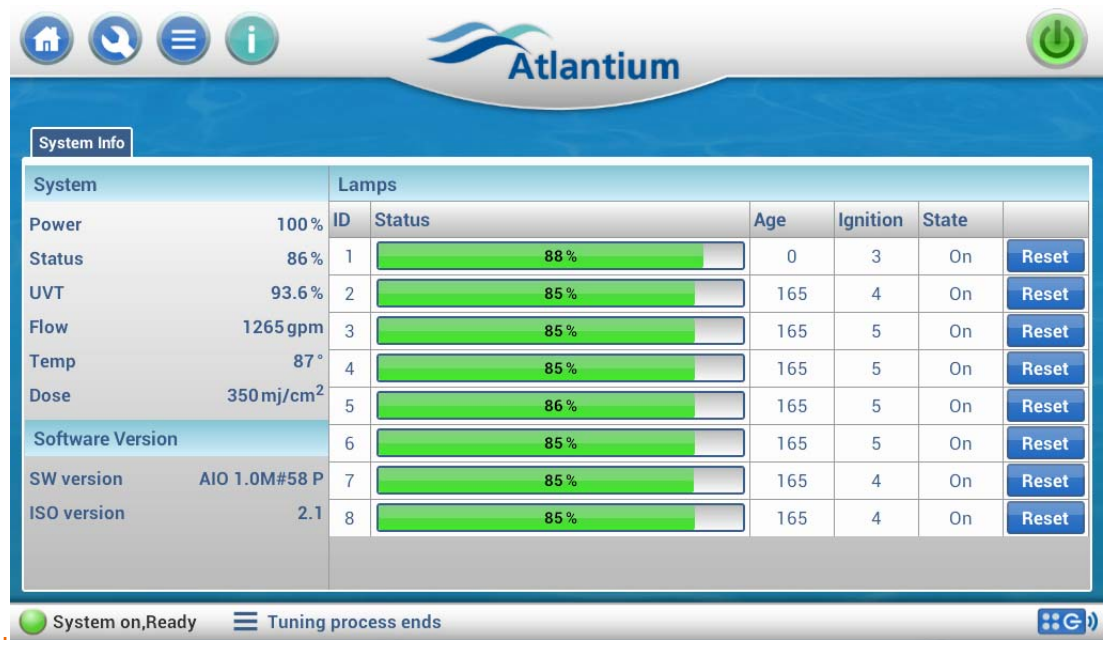

Figure 10-6: System Information Screen

Step 2. In the middle-left, check the value for **Temp**.

Step 3. Verify that the temperature readings are within acceptable temperature range.

10.5 Replacing a Lamp

The UV lamp can be used as long as it provides the required dose and efficient service. (Generally, a lamp service status of 80% or more is considered efficient service.) A lamp should be replaced ONLY when necessary.

Each lamp's performance is measured directly by a dedicated UV Intensity Sensor. Each lamp's performance is measured directly by a dedicated UV Intensity Sensor. Replace a lamp when:

- Its status or performance declines and the lamp no longer provides the required performance at the appropriate electrical cost
- Once its rated hours expire, be alert to any changes in efficiency that could indicate the need to change the lamp

In the **Controller**, you can set a margin to assure notification as status declines and a warning is sent to the operator at both the user setting level and the internally coded minimum.

For systems with multiple lamps, the system may continue to operate while any one of the lamps is being replaced. **However, in a dual lamp chamber, both lamps in the lamp chamber must be shut down before replacing one of them.**

- Allow the old lamp at least 10 minutes to cool down before starting.
- Read carefully the instructions provided in the new Lamp package.
- Wear white cotton gloves.

- Before installing a new lamp, verify that it is clean and free of grease.
  If not, rub it gently with the provided lens tissue. Never touch the lamp with your bare hands - hold it only by the end-connectors. Oily residues from fingerprints can damage the lamp.

- The UV lamps are designed with high internal positive pressure. Wear protective eye-wear while replacing a lamp. Pay strict attention to the safety warnings and precautions in the ***Safety Overview*** on page **4-1** in the front of this manual.
- In case of lamp breakage, refer to the Safety instructions in ***Safety Overview*** on page **4-1**.

Generally, a lamp is replaced after shutting down the entire Atlantium system. However, in a facility where there is no redundance UV purification, and you require minimizing system downtime, you can replace a lamp while other lamps continue operation provided you follow these safety requirements:

- Shutdown the electricity supplied to the lamp to be replaced.
- **During the time when the lamp's caps are removed, use Caution floor signs at a distance of 1m/40inch from the Atlantium Unit that warn passersby against possible UV light exposure and not to approach without proper eye and skin protection.**
- Wear white cotton gloves.
- Wear long sleeves rolled down to your wrist.
- Wear appropriate eye protection.
- **Do not look directly into the lamp enclosure or into any openings that emit UV light during the entire lamp replacement procedure.**

Prepare the following:

- Replacement lamp
- Lamp cleaning cloth (comes with the lamp)
- White cotton gloves
- Eye protection
- #2.5 Allen wrench
- #3 Allen wrench
- #4 Allen wrench
- Caution signs

➲ To shut down the entire system:

Step 1. On the top-right of the screen, press . The button turns grey. Wait approximately three minutes for the **Ready Lamps Off** signal to transmit.

Step 2. On the corresponding Connection Box associated with the lamp to be replaced, turn the switch to the **OFF** position.

Step 3. For the lamp that is to be replaced, on the connection box, turn the lamp switch to the **Off** position.

A severe danger of electrocution exists if the lamp is not turned off during replacement. Be absolutely sure you have turned off the correct lamp's switchswitch before you proceed to replace the lamp.

Step 4. Open the **Controller** using the attached key and locate the circuit breaker. Turn the circuit breaker to the **OFF** position.

Step 5. For the lamp that is to be replaced, on the connection box, turn the lamp switch to the **Off** position.

Step 6. Continue with the procedure, ***To replace a lamp*** below.

To shut down electricity to a pair of lamps:

Step 1. At the top of the screen, press . The **Monitor Tab** is displayed.

Lamp ID	Power %	Status %	UVT %	UVIS mA	UVTS mA	Lamp kW	Lamp V	Lamp A	Temp F	On Off	Lamp Enabled
1	100	54	98.6	16.5	12.5	4.20	400.00	10.50	N/C		✓
2	100	89	0.0	16.5	N/A	4.20	400.00	10.50	87.0		✓
3	100	89	0.0	16.5	N/A	4.20	400.00	10.50	N/C		✓
4	100	89	91.7	16.5	12.5	4.20	400.00	10.50	N/C		✓
5	100	89	0.0	16.5	N/A	4.20	400.00	10.50	N/C		✓
6	100	89	0.0	16.5	N/A	4.20	400.00	10.50	N/C		✓
7	100	89	0.0	16.5	N/A	4.20	400.00	10.50	N/C		✓
8	100	89	0.0	16.5	N/A	4.20	400.00	10.50	N/C		✓

Under **Lamp Enabled**, for each lamp you want to disable, press the checkbox to remove the check box. The corresponding lamp is disabled.

- A severe danger of electrocution exists if the lamp is not turned off during replacement. Be absolutely sure you have turned off the correct lamp's switch before you proceed to replace the lamp.

Step 2. For the lamp that is to be replaced, on the connection box, turn the lamp switch to the **Off** position. Both lamps in the corresponding lamp chamber are shut down.

Step 3. Continue with the procedure, ***To replace a lamp***, below.

To replace a lamp:

If you are replacing a lamp while other lamps are still in operations, follow these safety requirements:

- **During the time when the lamp's caps are removed, use Caution floor signs at a distance of 1m/40inch from the Atlantium Unit that warn passersby against possible UV light exposure and not to approach without proper eye and skin protection.**
- Wear white cotton gloves.
- Wear long sleeves rolled down to your wrist.
- Where appropriate eye protection, such as containing polycarbonate lens that meet EN166, CAN/CSA-Z94.3-02 and/or Z87.1 standards.
- **DO NOT look directly into the lamp enclosure during the entire lamp replacement procedure.**

While carrying the steps of this procedure, check that the O-rings on the components, such as the lamp housings and holders, are not damaged. If damaged, replace them before refastening the component in place.

Accessing the Lamp

For systems that contain wave guides, **be sure to access the lamp from the side that contains the sensors**. The wave guide is fragile and may be damaged easily if the lamp is inserted from the opposite site.

Step 4. Using a #3 Allen wrench, remove the four Allen screws **(1)** that secure the lamp's connector assembly **(2)** and remove the connector assembly. Each screw has a washer.

Step 5. **To prevent any damage to the lamp**, make sure you pull the lamp's connector assembly straight out and not at an angle.

Step 6. Using a #4 Allen wrench, remove the 4 screws **(3)** of the lamp's housing **(4)**. Each screw has a washer.

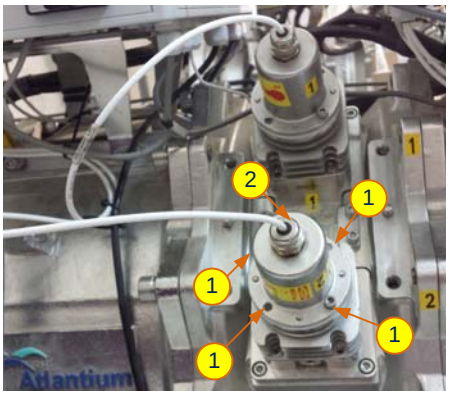

Figure 10-7: Lamp Replacement (Generic View 1)

Step 7. Grasp the lamp's housing and rotate it clockwise and counterclockwise until it loosens. **Make sure the housing is not tilted against the quartz tube while rotating it**.

(The O-Ring on the sleeve stopper between the holder and the stopper may cause the two parts to stick due to the heat. The slight rotation releases it).

Step 8. **To prevent any damage to the lamp and quartz tube,** make sure you pull the lamp's housing straight out and not at an angle.

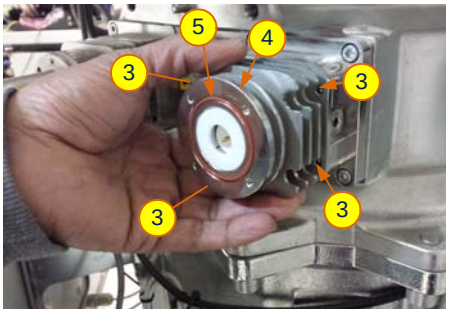

Figure 10-8: Lamp Replacement (Generic View 2)

Removing the Faulty Lamp

The lamp is hot! DO NOT touch the lamp with bare hands, particularly the quartz portion.
Wait at least ten minutes until the lamp has cooled down or use an appropriate pair of long-nose pliers to carefully pull out the lamp.

Step 9. Wearing appropriate cotton gloves and skin covering, and using a suitable long-nose pliers, pull the lamp straight out of the quartz tube in the Unit and set it aside on a stable surface.

Step 10. Check the inner surface of the quartz tube for residual moisture or high humidity. If any visible moisture exists, using a lens cleaning cloth, dry it.

Step 11. Check the o-ring **(6)** for damage. If needed, replace it.

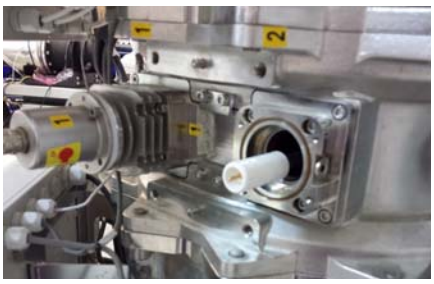

Figure 10-9: Lamp Replacement (Generic View 3)

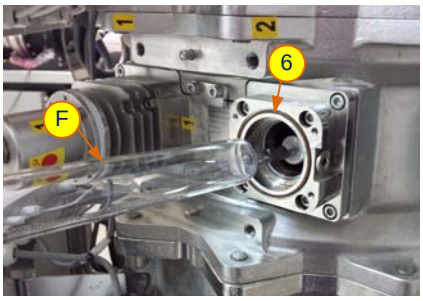

Figure 10-10: Lamp Replacement (Generic View 4)

Installing the Replacement Lamp

Step 12. Unpack the new UV lamp from its vacuumed sealed package.

Step 13. Make a note of the serial number of the new lamp.

Step 14. Clean the new lamp using the cleaning pad provided with the lamp. Verify that no visible fingerprint or dust is on the lamp.

Step 15. Insert the new lamp **(F)** into the quartz tube, all the way until it stops. Ensure that the male contact point **(G)** on the end of the lamp has meshed with the female contact point **(G)** in the lamp's housing on the other side of the Unit.

Step 16. Check that the lamp housing's O-ring is in place, clean, dry and undamaged. Replace if necessary.

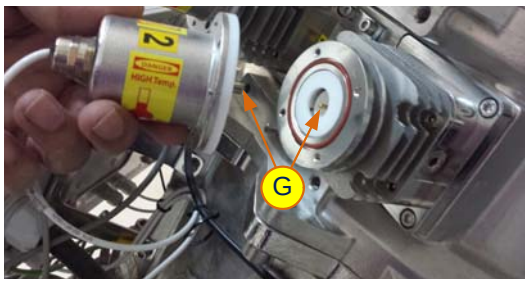

Figure 10-11: Lamp, Connector Assembly and connectors

Step 17. Reinstall the lamp's housing and, using the # 4 Allen wrench, fasten the four Allen screws with their washers to secure it to the Unit.

Step 18. Reinstall the lamp's connector assembly pushing it straight in. Ensure that the male contact point **(G)** on the end of the lamp has meshed with the female contact point **(G)** in the lamp's housing on the other side of the Unit.

Step 19. Using the # 3 Allen wrench, fasten the four Allen screws with their washers to secure it to the Unit.

Allowing the Atlantium Unit to Run with Caps Open

Step 20. **Temporarily place Caution floor signs at a distance of 1m/ 40inch from the Atlantium Unit that warn passersby against possible UV light exposure and not to approach without proper eye and skin protection.**

Step 21. Unscrew and remove the two caps **(H)** on each side of the lamp. (See the figure to the right.)

Step 22. For the lamp that is to be replaced, on the connection box, turn the lamp switch to the **On** position.

Step 23. Check that the lamp ignites properly.

Step 24. Operate the system without the lamp's caps for one hour.

Step 25. Return the lamp's caps **(G)**.

System Tuning

Step 26. Perform system tuning according the instructions on page **10-26**.

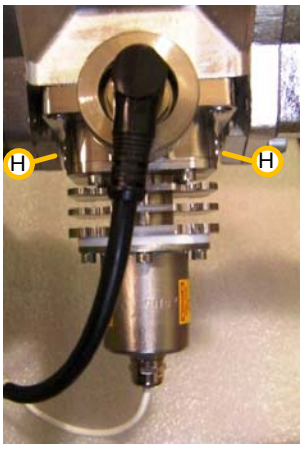

Figure 10-12: Lamp's Caps (Generic View)

Recording Lamp's Serial Number

Step 27. Gather the following information about the old lamp you replaced:

- lamp's serial number
- system model
- the number of hours on the lamp usage clock when you changed the lamp
- the number of ignitions of the lamp
- the status of the lamp when you changed it

Step 28. Email this information to:support@atlantium.com.

Reactivation the Lamp

Step 29. **Temporarily place Caution floor signs at a distance of 1m/40inch from the Atlantium Unit that warn passersby against possible UV light exposure and not to approach without proper eye and skin protection.**

Step 30. Open each of the lamp's caps (2 on each side of a lamp). For the location of the lamps' caps, see Figure **10-12** , on page **10-15**.

Step 31. At the top of the screen, press . The **Monitor Tab** is displayed.

Lamp ID	Power %	Status %	UVT %	UVIS mA	UVTS mA	Lamp kW	Lamp V	Lamp A	Temp F	On Off	Lamp Enabled
1	100	54	98.6	16.5	12.5	4.20	400.00	10.50	N/C		✓
2	100	89	0.0	16.5	N/A	4.20	400.00	10.50	87.0		✓
3	100	89	0.0	16.5	N/A	4.20	400.00	10.50	N/C		✓
4	100	89	91.7	16.5	12.5	4.20	400.00	10.50	N/C		✓
5	100	89	0.0	16.5	N/A	4.20	400.00	10.50	N/C		✓
6	100	89	0.0	16.5	N/A	4.20	400.00	10.50	N/C		✓
7	100	89	0.0	16.5	N/A	4.20	400.00	10.50	N/C		✓
8	100	89	0.0	16.5	N/A	4.20	400.00	10.50	N/C		✓

Figure 10-13: Monitor Tab

Step 32. For each lamp in the system defined in the **Lamp ID** column, In the a corresponding **Lamp Enabled** column on the right, make a checkmark. The Lamp's **On/Off** icon turns grey. Check that the lamps are indeed on. Check that the values for the other columns are in normal range.

Step 33. At the top of the screen, press the **Event Log** screen is displayed. The Event log screen is displayed. Verify that an Event log item showing that the lamps have been ignited is displayed. The event may take a few seconds to appear on the screen.

Step 34. Let the system operate for at least one hour.

Step 35. Close all of the lamps' caps and remove the Caution floor signs.

Reset the Ignition Counter of the Replaced Lamp

Step 36. On the **Controller**, from the top of the screen, press . The **system Info** screen is displayed.

Step 37. On the left, for the lamp that has been replaced, press Reset. The Lamp age and number of ignitions is reset to zero.

Figure 10-14: System Info Screen

10.6 Cleaning / Replacing the UV Intensity Wave Guide

Performed as needed

If your system includes wave guides:

For each UVIS sensor in the Atlantium Unit, there is an internal wave guide for directing UV light into the sensor. The UV Intensity Sensor's wave guide must be cleaned every time the lamps are replaced.

Prepare the following:

- Replacement UV Intensity Sensor's Wave Guide
- Wave Guide tool
- White cotton gloves
- Alcohol/isopropanol and lint-free lens cleaning paper
- Appropriate Phillips screwdrivers

- Allow the old lamp at least 10 minutes to cool down before starting.

- Be very careful when handling the wave guide. The wave guide is made of quartz and is fragile and easily broken.

➲ To clean / replace the wave guide:

Accessing the Wave Guide to be Replaced

Step 1. On the side of the Unit where the UVIS sensors are located, identify the lamp whose wave guide is to be cleaned/ replaced.

Follow the directions for removing a lamp. See ***Replacing a Lamp*** **on page 10-10.**

Removing the Wave Guide

Step 2. Screw the Wave Guide tool **(L)** onto the wave guide socket **(J)**.

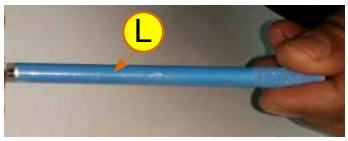

Figure 10-15: Wave Guide Tool

Step 3. While holding the Wave Guide tool **(L)** now attached to the wave guide **(G)**, using an appropriate Phillips screwdriver, **(M)** unfasten each of the screws **(K)**.

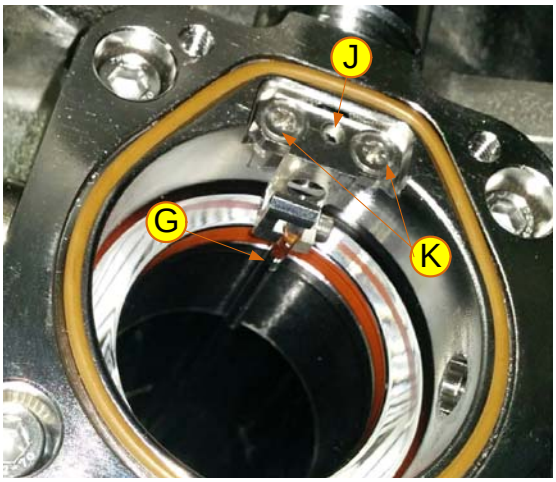

Figure 10-16: Wave Guide Elements-Generic

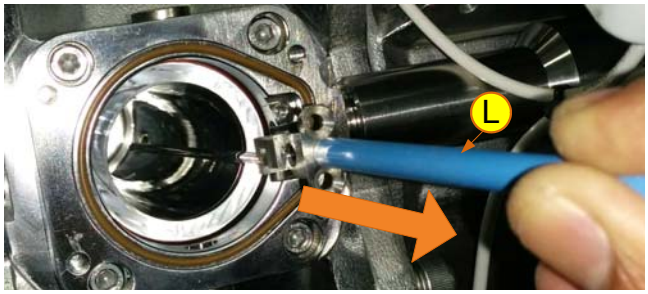

Figure 10-17: Removing the Wave Guide-Generic

Step 4. With the Wave Guide tool **(L)**, carefully pull out the wave guide.

Step 5. Unscrew the Wave Guide tool **(L)** and detach it from the wave guide **(G)**.

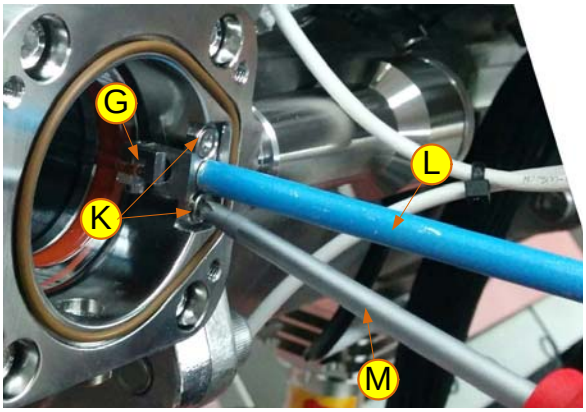

Figure 10-18: Unfastening the Wave Guide -Generic

Figure 10-19: Wave Guide Tool and Wave Guide

Cleaning the Wave Guide

Step 6. While wearing white cotton gloves, carefully clean the wave guide with isopropanol and lint-free lens cleaning paper.

Step 7. Ensure that the wave guide is completely dry before returning it to its place.

Step 8. Examine the wave guide for marks and damage. Fingerprints or other stains may cause erroneous UV intensity sensor readings. If the wave guide's surface is damaged, it must be replaced.

Preparing the Replacement Wave Guide

Step 9. Screw the Wave Guide tool **(L)** onto the wave guide socket **(J)**.

Step 10. With the Wave Guide tool **(L)**, carefully insert the wave guide in place.

Step 11. While holding the Wave Guide tool **(L)** now attached to the wave guide **(G)**, using an appropriate Phillips screwdriver, **(M)** fasten each of the screws **(K)**.

Step 12. Check that the wave guide is parallel to the side of the quartz tube and not pointing at an angle. If it is at an angle, the quarts tube is not installed straight. Remove the wave guide and remove and reinstall the quartz tube following the directions in ***Cleaning/Replacing a Lamp's Quartz Tube and O-rings*** on page **10-20**. When complete, install the wave guide again.

The correct position of the wave guide is parallel to the side of the quartz tube and a distance of 0.75mm from the quartz tube.

Step 13. Follow the directions to reinsert the lamp and refasten the lamp's housing and connector See ***Replacing a Lamp*** on page **10-10.**

10.7 Cleaning / Replacing the UV Intensity Sensor's Mirror

Performed as needed

If your system includes UVIS mirrors:

For each lamp in the Atlantium Unit, there is a small internal mirror **(A)** for directing UV light into the sensor. The UV Intensity Sensor's Mirror must be cleaned every time the lamps are replaced.

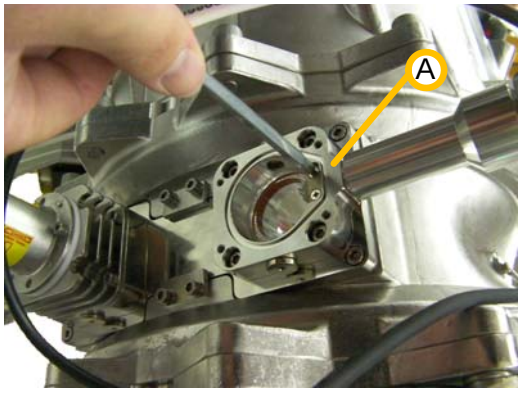

Figure 10-20: Generic Cleaning the UV Intensity Sensor's Mirror

Prepare the following:

- Replacement UV Intensity Sensor's Mirror
- Isopropanol and lint-free lens cleaning paper
- Small Phillips screwdriver

To access the mirror, remove the lamp connector assembly from the side with the UVIS sensor. The Lamp housing on this side has the UVIS sensor connected. See page **10-10** for instructions on accessing the Lamp housing.

While carrying the steps of this procedure, check that the O-rings on the components, such as the lamp housings and holders, are not damaged. If damaged, replace them before refastening the component in place.

➲ To clean the mirror:

Step 1. No particular parts need be removed from the Unit in order to access the mirror for cleaning, once the lamp has been removed. See page **10-10** for instructions on replacing the lamp.

Step 2. Clean the reflective side of the mirror – the side facing into the Unit – with isopropanol and lint-free lens cleaning paper.

Step 3. Ensure that the mirror is completely dry before re-assembling the UV lamp.

Step 4. Examine the mirror's surface after cleaning and before you close the UV lamp' housing. Fingerprints or other stains may cause erroneous UV intensity sensor readings. If the mirror’s surface is damaged, it must be replaced.

➲ To replace the mirror:

Step 1. Once the lamp has been removed, you can replace a damaged mirror. See page **10-10** for instructions on replacing the lamp.

Step 2. Using a small Phillips screwdriver, remove the two screws holding the mirror in place and remove the mirror.

Step 3. Clean the reflective side of the replacement mirror with isopropanol and lint-free lens cleaning paper.

Step 4. Examine the mirror's surface after cleaning and before you install it to make sure it is damage-free.

Figure 10-21: Removing the Mirror

Step 5. Carefully place the new mirror in position and using the screwdriver, fasten it securely.

Step 6. Before you close the UV lamp' housing, examine the mirror's surface it make sure it is free of fingerprints or other stains, which may cause erroneous UV intensity sensor readings. Clean it again if necessary.

Step 7. Ensure that the mirror is completely dry before re-assembling the UV lamp.

Figure 10-22: Cleaning the Replacement Mirror

10.8 Cleaning / Replacing a Lamp's Quartz Tube and O-rings

The quartz tube is cleaned as needed according to the UVT Sensor readings and when deposit collects on the quartz tube. **The quartz tube’s rubber O-rings must be replaced when dismantling the quartz tube**.

Under normal environmental conditions, the quartz tube’s rubber O-rings (as shown in **Figure 10-27** below) must be replaced once a year even if they pass visual inspection. For environments where the water temperature is above 70°C (160°F), the quartz tube’s O-rings must be replaced quarterly, for which after the first year, O-rings may require replacement less frequently. For more information, consult your Atlantium representative.

Depending on the quality of the water being treated by the Atlantium Unit, the exterior surface of the quartz tube that houses a lamp may require periodic cleaning or replacement if after the optional Cleaning system and the CIP process the quartz tube is still not sufficiently clean. This is to be determined by the quality control officer at the facility.

Prepare the following:

- Replacement quartz tube (if replacing)
- Two O-rings (See view **B** in **Figure 10-27** below)
- #2.5 Allen wrench
- #3 Allen wrench
- #4 Allen wrench
- Protective gloves
- Appropriate cleaning cloth. A mild, household cleaning solution
- Alcohol

While carrying the steps of this procedure, check that the O-rings on the components, such as the lamp housings and holders, are not damaged. If damaged, replace them before refastening the component in place.

➲ To clean or replace the quartz tube:

Powering Down the System

Step 1. On the **Controller**, press . The button turns grey. Wait approximately three minutes for the **Ready Lamps Off** signal to transmit.

A severe danger of electrocution exists if the lamp is not turned off during replacement. Be absolutely sure you have turned off the correct lamp's switch before you proceed to replace the lamp.

Step 2. Open the **Controller** using the attached key and locate the circuit breaker. Turn the circuit breaker to the **OFF** position.

Step 3. For the lamp whose quartz tube is to be cleaned or replaced, on the connection box, turn the lamp switch to the **Off** position.

Isolating the Unit

Step 4. To isolate the Unit, close the Inlet and Outlet valves.

Step 5. Using the Drain valve, drain the water from the Unit.

Accessing the Quartz Tube

Step 6. Quartz tube removal requires that the lamp connector assemblies, lamp housings (on both ends of the lamp) and the lamp be removed, as well as the quartz tube holder. To remove the lamp connector assembly and lamp housing from the upper side of the Unit, as well as the lamp, see ***Replacing a Lamp*** on page **10-10**.

While pulling the lamp housing away, DO NOT tilt it and DO NOT pull it away from the lamp/sleeve axis at an angle.

Step 7. To remove the quartz tube's holder on the upper side of the quarts tube, using a #4 Allen wrench, remove the four Allen screws, opening them in a diagonal pattern (i.e. upper left, lower right, upper right, lower left) **(A)** that secure the tube's holding ring to the Unit. Loosen one screw gradually (2 turns) on one side and do the same on the screw at the diagonal opposite side of the tube (2 turns).

Step 8. Continue to alternate until both tube holders are loose, and then remove the screws completely. Each screw has a washer.

While pulling the quartz tube's holder away, DO NOT tilt it and DO NOT pull it away from the lamp/sleeve axis at an angle. The wave guide is fragile and may be damaged if the quartz tube is tilted.

Step 9. On the lower side of the Lamp chamber, remove the cable from the UVIS sensor **(B)**.

Step 10. To remove the quartz tube's holder on the lower side of the quarts tube **(C)**, perform **Step 7.** to **Step 9.** on it.

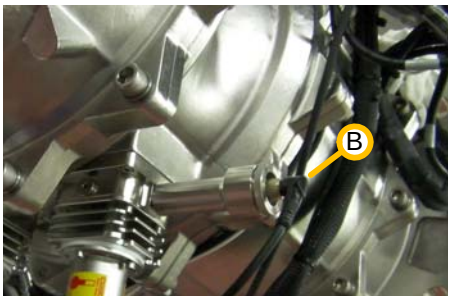

Figure 10-23: Removing the Cable from the UVIS Sensor

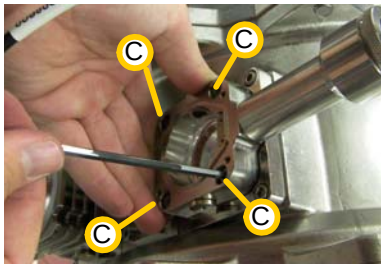

Figure 10-24: Removing the Quartz Tube's Holder on the Lower Side

Removing the Quartz Tube

Wear protective gloves. To protect the quartz tube, do not touch the internal surface with your bare hands.

Step 11. On the upper side of the quartz tube, place a gloved palm of your hand over the quartz tube and gently push in **(D)**. The quartz tube shifts inward. The o-ring **(F)** on the side where you pushed slips out (if not, take it off).

Step 12. On the lower side of the quartz tube, the tube sticks out slightly. **To prevent any damage to the quartz tube, make sure you pull the quartz tube straight out.** Carefully pull out the quartz tube **(G)** and remove the O-ring **(F).**

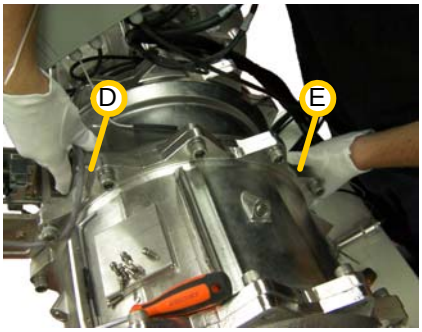

Figure 10-25: Push Quartz Tube (Generic View)

Cleaning the Quartz Tube

Step 13. If there is a deposit buildup on the tube's exterior surface, clean it with a mild, household cleaning solution.

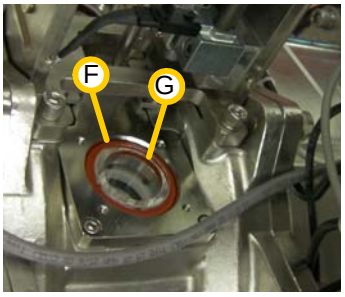

Figure 10-26: Quartz Tube and O-ring (Generic View)

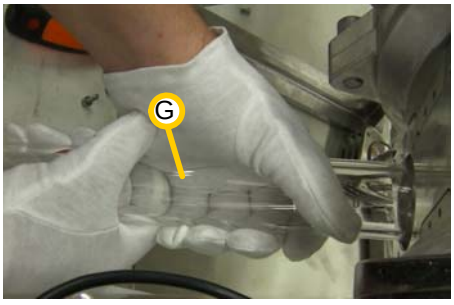

Figure 10-27: Quartz Tube and O-ring (Generic View)

Step 14. Clean the exterior and interior surfaces with alcohol. If the tube cannot be cleaned to a pristine condition, replace it with a new one.

Step 15. Ensure that there is no residual moisture or high humidity on the inner surface of the quartz tube. If any visible moisture exists, dry it before inserting it in place.

Installing the Quartz Tube

Step 16. Mount a new O-ring onto the quartz tube (as shown in **Figure 10-27** above) and insert the tube into the Unit from the lower side until it reaches the other side. Make sure it is centered as you insert it.

Step 17. Add the second new O-ring on the other side of the quartz tube.

Assembly

Step 18. Install the quartz tube holder on the lower side and close it loosely with 4 screws in a diagonal pattern (upper left, lower right, upper right, lower left). **Do not tighten the screws!!**

For systems with wave guide, while reinstalling the tube holder, DO NOT tilt it and DO NOT insert it at an angle. the wave guide is fragile. Take care not to damage it when inserting the lamp housing.

Step 19. Install the quartz tube holder on the upper side.

Step 20. Using a #4 Allen wrench, close the screws in diagonal pattern and tighten them.

Step 21. To reinstall the lamp, perform **Step 14.** to **Step 26.** on page **10-14** in the section,10.5. Replacing a Lamp.

Step 22. Reinstall the lamp's connector assembly pushing it straight in and using the # 4 Allen wrench, fasten the four Allen screws with their washers to secure it to the Unit.

Powering Up the System

Step 23. Open the Inlet and Outlet valves.

Step 24. For the replaced lamp. on its corresponding Connection Box, turn the switch to the **On** position.

Step 25. On the Main screen of the **Controller**, press . The button turns green.

Step 26. Wait 10 minutes for lamps to turn on and the system to stabilize.

Step 27. Open the viewport and check that there are no air bubbles in the water flow. If necessary, release all air bubbles from within the system.

Step 28. Check the main screen of the **Controller** and verify that the Atlantium system parameters for **Power**, **Flow**, and **UVT** are within wanted acceptable range and record is using the Table in **Appendix 11**. ***Checking the System Parameters*** on page **11-1**.

Notify the executive maintenance engineer in case the values are out of range.

10.9 Replacing / Checking a UVIS Sensor or UVT Analyzer

Performed as needed

For some of the sensors, there is an pinhole located on the sensor's window. This pinhole is calibrated by Atlantium for the specific measurement point. Do not switch disks between ports. Before inserting the sensor, be sure to include the pinhole if present.

Prepare the following:

- Replacement sensor

➲ To replace a sensor:

Step 1. To disconnect the harness connector (shown by the arrow in view **A** below), unscrew the sensor's threaded locking nut.

Step 2. Unscrew the sensor's threaded locking nut from the bottom of the sensor housing, as shown in view **B**.

Figure 10-28: Replacing the Sensors 2 (Generic View)

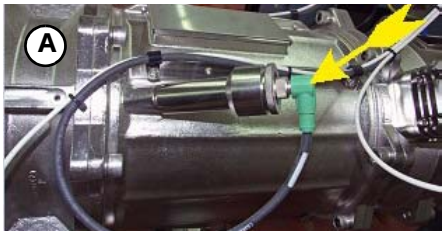

Figure 10-29: Replacing the Sensors 2 (Generic View)

Step 3. Carefully pull the sensor out of the housing **(C)**.

Step 4. If an pinhole **(E)** is present it slides out.

Step 5. Unpack the new sensor **(D)** and (if it is supplied) the sensor pinhole.

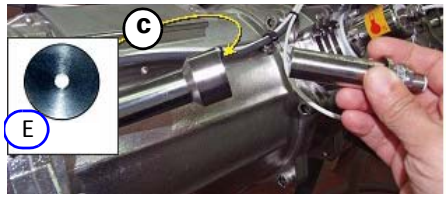

Figure 10-31: Replacing the Sensors 3 (Generic View)

Figure 10-30: Replacing the Sensors 4 (Generic View)

Step 6. To enables the system to track relevant data about the sensor, make a note of its serial number.

Step 7. Verify that the sensor lens **(F)** is clean. If needed, using a lens cloth, clean it.

Step 8. If an pinhole **(E)** is present, insert it.

Step 9. Insert the sensor into the housing, and screw the threaded cap back into the housing to secure the sensor.

Step 10. Reconnect the harness's threaded cap to the new sensor.

Step 11. In the **Controller**, perform **System Tuning**, see the section, ***System Tuning*** on page **10-26**.

10.10 Testing System Lamps

During normal operations, an authorized facility technician may need to test the lamps, that appears on the Tech Monitor screen.

➲ To test the lamps:

Step 1. At the top of the screen, press . The **Monitor Tab** is displayed.

Step 2. Press the **Tech Monitor Tab** . The **Tech Monitor** screen appears.

Figure 10-32: Tech Monitor Tab

Step 3. For each lamp to be tested according to the **Lamp ID** column on the left, make a mark in the checkbox on the right.

Step 4. To adjust the power of the selected lamp(s), using the **-/+** buttons, set the desired power value. Check that the values for the other columns are in normal range.

Step 5. To Turn off the he selected lamp(s), press **Lamp Off**. The Lamp's **On/Off** icon turns grey. Check that the selected lamp is indeed off. Check that the values for the other columns are in normal range.

Step 6. To Turn on the he selected lamp(s), press **Lamp On**. The Lamp's **On/Off** icon turns green. Check that the selected lamp is indeed on. Check that the values for the other columns are in normal range.

When leaving the **Tech Monitor tab**, the lamps are returned to the settings of the system's configuration.

10.11 System Tuning

System tuning is performed on these occasions:

- As the last step in system installation
- As the last step when lamps are changed and after 100 operating hours (as needed)
- Upon advice of an Atlantium Service Representative when the system is reset

➲ To tune the Atlantium system:

Step 1. Just prior to tuning, obtain a water sample from the sampling valve on the inlet side of the Atlantium Unit. Test the water sample in an external spectrophotometer. Write down the results. If a spectrophotometer in not available, record the current UVT value shown on the system's display.

Step 1. In the **Controller**, on the top of the screen, press . The button turns grey. Wait 10 minutes for lamps to turn on and the system to stabilize.

Step 2. On the Atlantium Unit, locate each UVIS and UVT Intensity Sensor.

Step 3. On each sensor (refer to the figures in the section, ***Replacing/Checking a UVIS Sensor or UVT Analyzer*** on page **10-24**):

- **a** Unscrew the locking nut and gently pull out the sensor.
- **b** With a dry and clean lint free cloth, wipe the UVIS sensor's quartz window.
- **c** Reinsert the sensor and replace the locking nut.

Step 4. To turn on the Atlantium system, on the **Controller** main screen, press . The button turns green. Wait approximately three minutes for the **Ready Lamps On** signal to transmit.

Step 5. At the top of the screen, press . The **Monitor Tab** is displayed.

Step 6. Press the **Tuning Tab**. The **Tuning** screen appears.

Figure 10-33: Technician Settings Screen> Tuning Tab (Actual numbers vary according to system configuration)

Step 7. Verify that the lamps are on and enabled (the number of lamps listed in the display is according to the number of lamps in your system configuration).

Step 8. For each lamp to be tuned, according to **Lamp ID** in column **1**, make a mark in the appropriate checkbox in the last column on the right.

Step 9. Under **Status T0 %** , using the **-/+** buttons, set the **Status T0 percentage** up to **100%**.

Step 10. Wait a few minutes to allow the system to stabilize.

Step 11. To verify that the Sensor readings are stable, observe the reading for a few seconds to see that they remain the same numbers. For the UVIS sensor, see the **UVIS mA** column above.For the UVT Intensity sensor, see the **UVTS mA** column above. If the numbers are not stable, unscrew and remove the two caps on each side of the lamp. (See Figure **10-12** , on page **10-15**.)

Step 12. Leave the caps open for 30 minutes to make sure no humidity is present in the lamp housing. Then replace the caps and check the sensor reading again.

When the Lamp's caps are removed, do not look directly into the opening without appropriate eye protection. The UV light emitted via the opening is a danger to the eyes.

Step 13. At the bottom of the screen, for **UVT To**, enter the current UVT value obtained from the spectrophotometer that you wrote down in **Step 1.** above (or the recorded current UVT value).

Step 14. To record the reason for tuning the system, At the bottom of the screen, for **Tuning Reason**, from the dropdown list, select the reason. The options are:

- **System Integration**
- **Lamp changed**
- **Maintenance**

Step 15. Press **Start Tuning**. A progress bar appears at the bottom of the screen. The process takes about 6 to 15 minutes.

If the system is not running, or if a lamp is not on, a popup message appears informing you that in order to start a tuning process, the system must be running.

Step 16. Verify that the UVT is the number you set previously (see the **UVTS mA** column) and that the Status on the Monitor tab is the same as the number you set in the **Status T0 %** column.

Step 1. Just prior to calibration, obtain a water sample from the sampling valve on the inlet side of the Atlantium Unit. Test the water sample in an external spectrophotometer. Write down the results. If a spectrophotometer in not available, record the current UVT value shown on the system's display.

Step 2. In the **Controller**, on the top of the screen, press . The button turns grey. Wait 10 minutes for lamps to turn on and the system to stabilize.

Step 3. On the Atlantium Unit, locate each UVIS and UVT Intensity Sensor.

Step 4. On each sensor (refer to the figures in the section, ***System Tuning*** on page **10-26**):

- **a** Unscrew the locking nut and gently pull out the sensor.
- **b** With a dry and clean lint free cloth, wipe the UVIS sensor's quartz window.
- **c** Reinsert the sensor and replace the locking nut.

Step 5. To turn on the Atlantium system, on the **Controller** main screen, press . The button turns green. Wait approximately three minutes for the **Ready Lamps On** signal to transmit.

DO NOT leave the **Controller** unattended while in **Technician mode** even for a short time. Unauthorized changes to the **Technician mode** settings could damage the operation of the Atlantium system.

Step 6. If the numbers are not stable, unscrew and remove the two caps on each side of the lamp. (See Figure **10-12** , on page **10-15**.)

Step 7. Leave the caps open for 30 minutes to make sure no humidity is present in the lamp housing. Then replace the caps and check the sensor reading again.

When the Lamp's caps are removed, do not look directly into the opening without appropriate eye protection. The UV light emitted via the opening is a danger to the eyes.

10.12 Advance Maintenance

The advanced maintenance procedures require opening the Connection Box. **Local regulations may require a certified electrician to perform any of these procedures.**

This section contains:

- ***Replacing the Temperature Sensor*** on page **10-29**
- ***Replacing the Temperature Converter Card*** on page **10-30**

10.12.1 Replacing the Temperature Sensor

Performed as needed

In the event that the Temperature sensor requires replacement, this section details the procedure.

Follow your local regulations regarding whether a certified electrician may be required to perform this procedure.

Any person involved in handling the Connection Box card or its components is required to wear an electrostatic discharge (ESD) Wrist Strap.

Connect the ESD Wrist Strap to any bolt on the body of the Atlantium Unit or to the metal bracket under the Connection Box using a banana plug or an alligator clip.

Prepare the following:

- Replacement Temperature sensor
- #5 Allen wrench
- #3 Flat screwdriver
- #2 Phillips screwdriver

➲ To replace the Temperature sensor:

Step 1. Turn the Mains circuit breaker to the **Off** position.

Step 2. Using the appropriate Allen wrench, open the Connection Box cover.

Step 3. Verify with volt meter that there is no power in first Connection Box card and that no LED is lit on the card.

Step 4. Locate and disconnect the Temperature Sensor connector **(A)**.

Step 5. Detach the wire from the terminal connector and remove the wire from the Connection Box via the gland.

Step 6. Using a #2 Phillips screwdriver, detach the temperature sensor **(C)** from the Atlantium Unit.

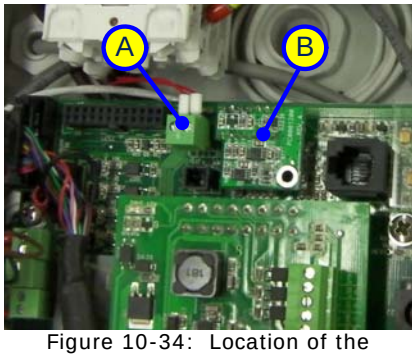

Figure 10-34: Location of the Temperature Sensor Connector

Step 7. Attach the replacement Temperature sensor **(C)** to the Atlantium Unit.

Step 8. Thread the wire through the gland and attach it to the terminal connector.

Step 9. Insert the connector **(A)** to its socket on the terminal block.

Step 10. Return the Connection Box cover and using the Allen wrench, fasten the screws. Tighten them in a diagonal pattern.

Step 11. Turn the Mains circuit breaker to the **On** position.

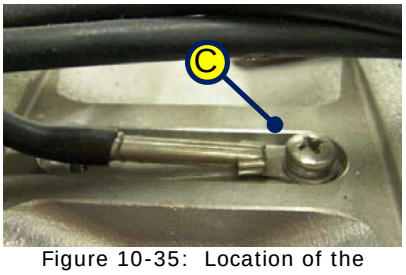

Figure 10-35: Location of the Temperature Sensor on the Atlantium Unit

10.12.2 Replacing the Temperature Converter Card

In the event that the Temperature sensor card requires replacement, this section details the procedure.

Follow your local regulations regarding whether a certified electrician may be required to perform this procedure.

Any person involved in handling the Connection Box card or its components is required to wear an electrostatic discharge (ESD) Wrist Strap.

Connect the ESD Wrist Strap to any bolt on the body of the Atlantium Unit or to the metal bracket under the Connection Box using a banana plug or an alligator clip.

Prepare the following:

- Replacement Temperature Converter card
- #5 Allen wrench
- #2 Phillips screwdriver

➲ To replace the Temperature sensor card:

Step 1. Turn the Mains circuit breaker to the **Off** position.

Step 2. Using the appropriate Allen wrench, on the first Connection Box, open the Connection Box cover.

Step 3. Verify with volt meter that there is no power in first Connection Box card and that no LED is lit on the card.

Step 4. Locate and carefully pull off the Temperature Sensor card **(B)**.

Step 5. Aligning the pins of the replacement Temperature Sensor card **(B)** with the connector (on the board) on the Connection Box card, carefully insert the small card into the connector of the Connection Box card.

Step 6. Return the Connection Box cover and using the Allen wrench, fasten the screws. Tighten them in a diagonal pattern.

Step 7. Turn the Mains circuit breaker to the **On** position.

Appendix 11 Checking the System Parameters

You can use the checklist below to keep a record of your checks on Atlantium system parameters. **Print this page**.

Table 11-1: Atlantium System Parameters Checklist

Date	Time	Lamp ID	Power	Flow Rate	UVT	UV Dose	Lamp Status	OK Y/N	Remarks/Alarms/ Events
			Add Expected Value _____	Add Expected Value _____	Add Expected Value _____	Add Expected Value _____	Add Expected Value _____		

Appendix 12 Glossary of Terms

Term	Definition
Auxiliaries	Valves, flow devices, etc. essential to the workings of the Atlantium system but not directly a part of the Atlantium system.
Ballast	The power supply that translates the electrical power to UV power.
Connection Box	The box that sits on top of each lamp unit and holds the circuit board for the Electrical Cabinet or Ballast Module electrical configurations. Not relevant for Ballast Module/Cable-style.
Controller	Controller that controls operations and dose measurement. Comes in two versions: Standard and Premium. The Standard has a monochromatic screen and several key features. The Premium has a color screen can accommodate a full complement of reporting and trending features.
Cooling System	The system that controls the cooling of the lamp to assure its optimal operation.
DPM Cleaner	The Deposit Prevention Mechanism for cleaning the quartz tubes.
External On/Off	This enables an external source (SCADA, PLC, Process) to turn the Atlantium system on and off.
Electrical configuration styles: **Atlantium provides a choice of electrical configurations.**	
Electrical Cabinet-style (EC)	**EC** - Electrical Cabinet.
Ballast Module	Waterproof case for the ballast which connects via a consolidated plug from the circuit board which sits on top of each lamp unit.
General Alarm	This enables the Atlantium unit to send an alarm to a buzzer, cell phone or other destination.
Inlet/Outlet Valves	Isolating Valves on the Inlet/outlet sides.
Lamp Chamber	The chamber which holds the lamp.
Lifting Support	The lifting element which can also be used to help support the Unit.
Pinhole	This is a small disc that is fitted for each sensor port to assure that the right amount of light penetrates.
Portable CIP System	The portable unit Atlantium sells that connects to the Unit to clean and disinfect it without disassembling. It includes several kits – a valve kit, an accessories kit and the CIP kit itself.
Quartz Chamber	The **quartz pipe** in which the disinfection occurs.
System Ready Signal	The signal the Atlantium unit provides to tell the production system that the machine is ready to supply properly disinfected water.

Term	Definition
System Tuning	This is process is performed when key components are replaced or changed to synchronize them.
TRAC Software	**T**otal **R**eporting **A**nalysis & **C**ontrol Software System; the software application that controls dose measurement and maintenance, and stores, analyzes and reports real time; enables viewing and controlling operations remotely for up to 9 Atlantium systems on one TRAC System. Provides full validated control and One-Touch pre-programmed reports for regulatory compliance with EPA and PMO rules.
Triangle Support Brackets	RZ-Series only- brackets that can be used to support and balance a unit.
Ultrasonic Cleaner	Ultrasonic cleaning system.
UV Intensity Sensor	The sensor that measures the UV intensity in the Lamp chamber and feeds the real time dose calculation.
UVIS Calibration	This is the EPA required process to check that the UV Intensity Sensor is reading correctly and has not drifted beyond the 20% tolerance allowed by the UVDGM.
UVT Analyzer	The sensor that measures the lamp UV intensity through the water. Together with the UV Intensity sensor and the Controller, it analyzes, tracks and reports the water quality.
UVT Analyzer Calibration	This is the EPA required process to check that the UVT Analyzer is reading within 2% of the actual UVT.
Validation Envelope	This is the matrix of flow, power and UVT values that are covered by the EPA validation.