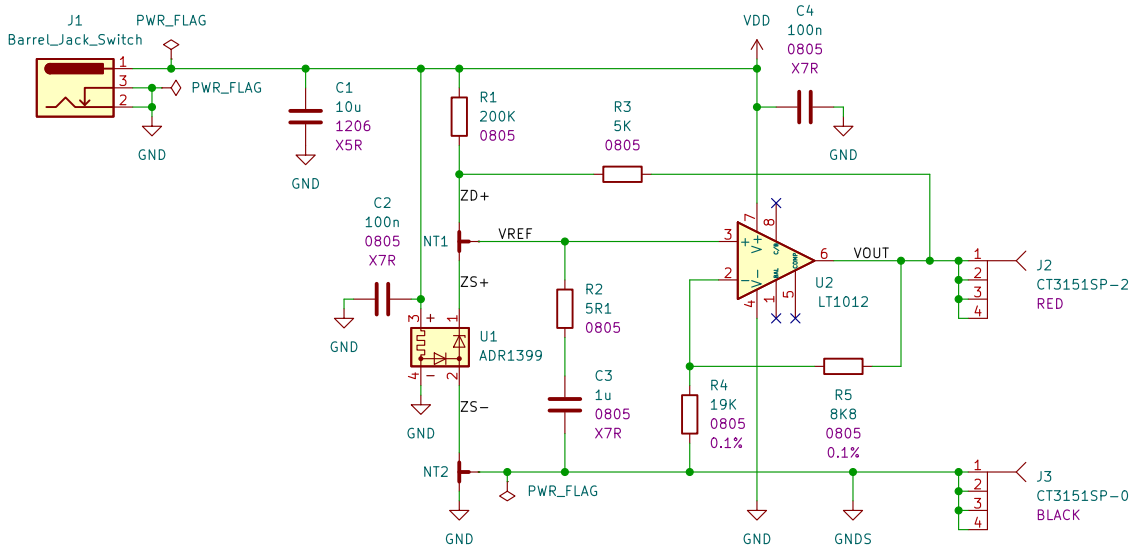

GPA Robotics

Sheet: /

File: pcb−adr1399−vref.kicad_sch

Title: ADR1399 VRef − Cover

Size: A4	Date: 2022−02−03 22:05:19
KiCad E.D.A. eeschema 6.0.0−d3dd2cf0fa~116~ubuntu21.10.1	
Repository: https://github.com/Atmelfan/pcb−adr1399−vref	**Rev: P1B−2**
License: Licensed under CERN−OHL−S version 2	Id: 1/1