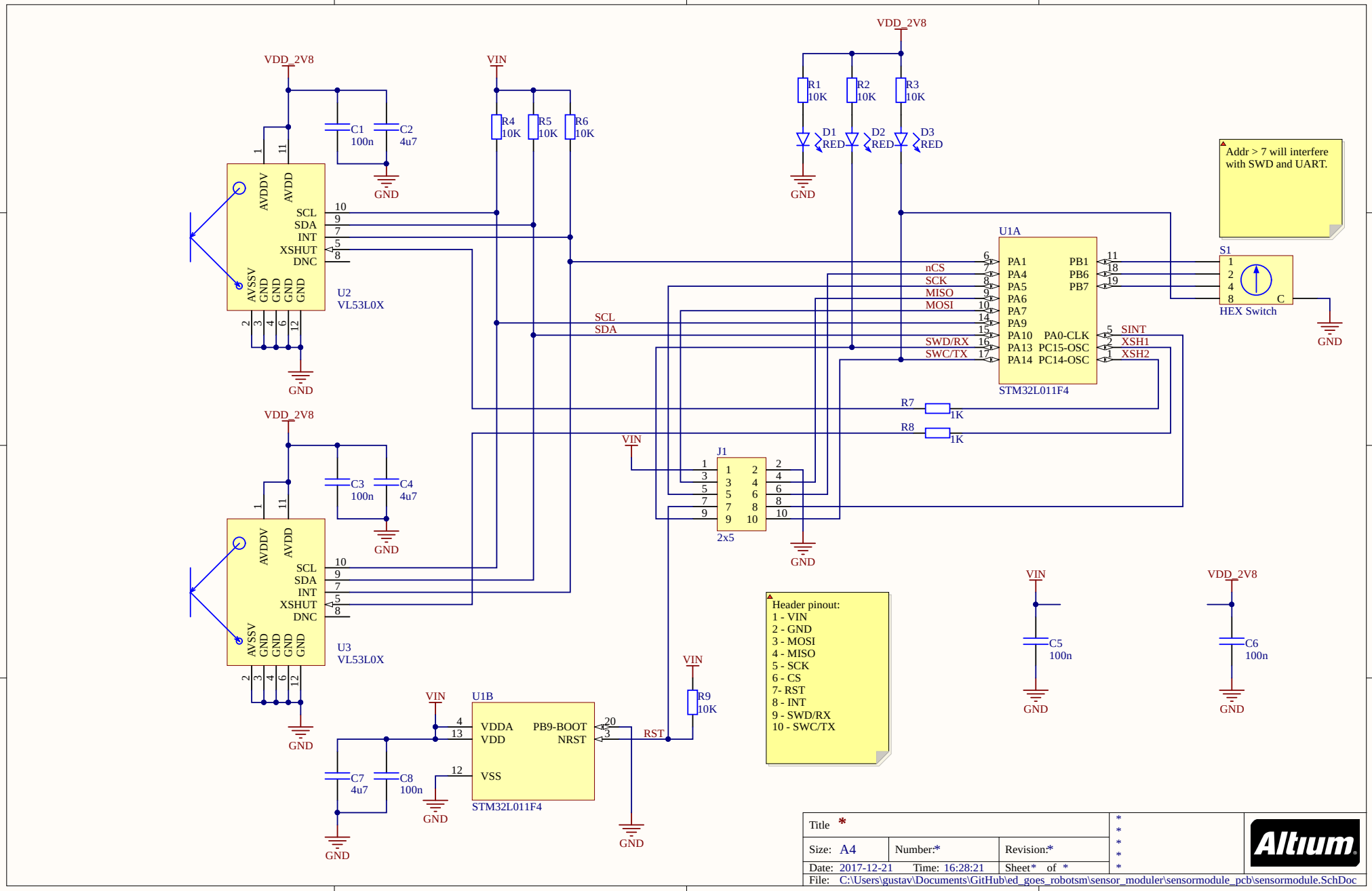
VDD_2V8
VIN
GND
C1 100n
C2 4u7
R4 10K
R5 10K
R6 10K
R1 10K
R2 10K
R3 10K
D1 RED
D2 RED
D3 RED
AVDDV
AVDD
SCL
SDA
INT
XSHUT
DNC
AVSSV
U2 VL53L0X
U3 VL53L0X
C3 100n
C4 4u7
U1A
PA1
PA4
PA5
PA6
PA7
PA9
PA10
PA13
PA14
PB1
PB6
PB7
PA0-CLK
PC15-OSC
PC14-OSC
STM32L011F4
nCS
SCK
MISO
MOSI
SWD/RX
SWC/TX
SINT
XSH1
XSH2
S1
HEX Switch
Addr > 7 will interfere with SWD and UART.
R7 1K
R8 1K
J1
2x5
Header pinout:
1 - VIN
2 - GND
3 - MOSI
4 - MISO
5 - SCK
6 - CS
7- RST
8 - INT
9 - SWD/RX
10 - SWC/TX
C5 100n
C6 100n
U1B
VDDA
VDD
VSS
PB9-BOOT
NRST
RST
R9 10K
C7 4u7
C8 100n
STM32L011F4
Title *
Size: A4
Number:*
Revision:*
Date: 2017-12-21
Time: 16:28:21
Sheet* of *
File: C:\Users\gustav\Documents\GitHub\ed_goes_robotsm\sensor_moduler\sensormodule_pcb\sensormodule.SchDoc
Altium