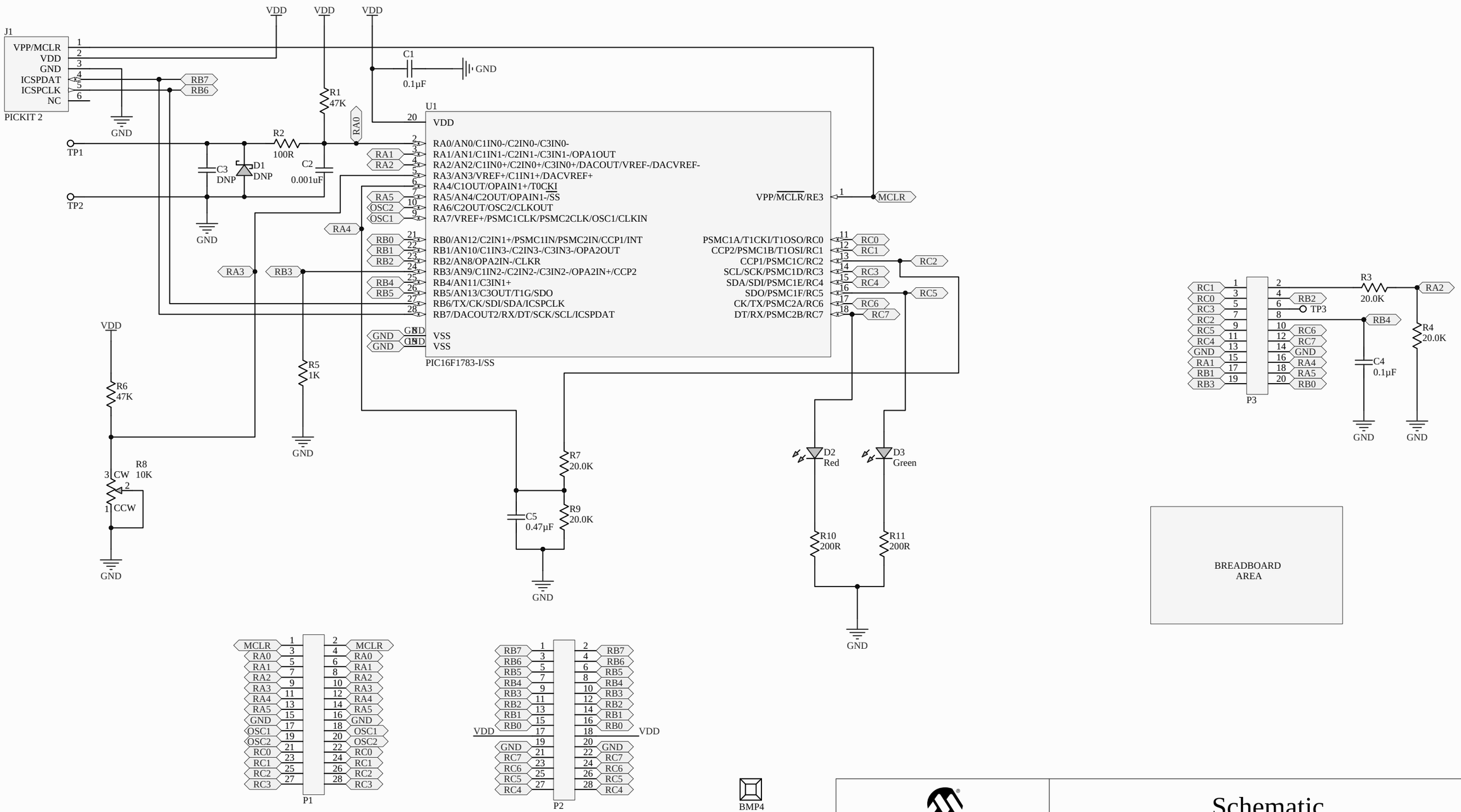

MICROCHIP

Microchip Technology Inc.
2355 W. Chandler Blvd.
Chandler, AZ 85224

Schematic

Title
F1 PSMC 28 Pin Evaluation Board

Eng: Enrique Aleman	Size B	FCSM No.	DWG No. 03-10064	Rev 1
Drawn by: R. Oliphant			
File: 03-10064r1.SchDoc	Scale	Date: 11/28/2012	Sheet 1 of 1