# PYNQ Remote Acquisition

Overview & Installation Guide

# System Overview - Initial files setup (1)

PC

```
your_directory
├──pynq_run.py
├──test.yaml
└──pixel_disable.csv
```

PYNQ 192.168.2.99

```
jupyter_notebooks
└─cubesat
    ├─test.py
    └─overlays
        └─test_2det_commanding.bit
```

# System Overview - SSH (2)

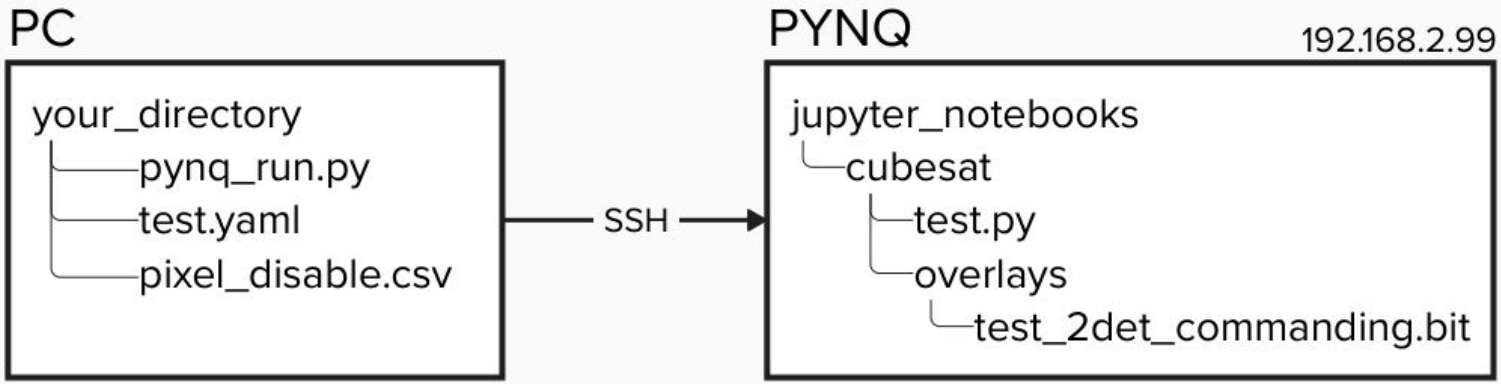

# System Overview - Transfer config files (3)

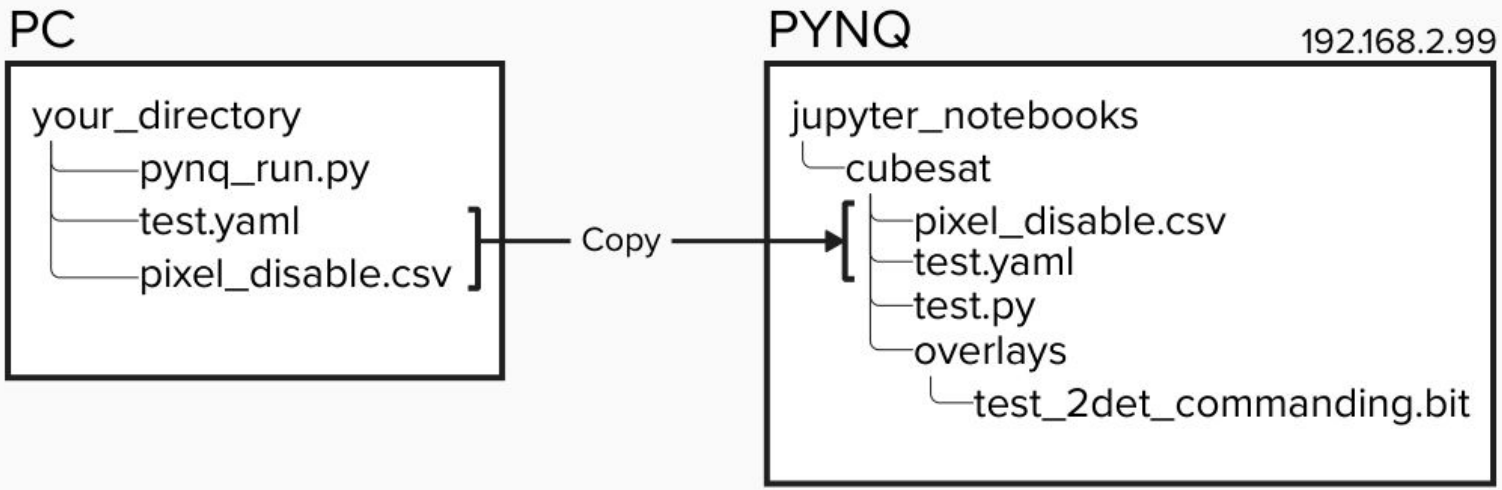

# System Overview - Perform experiment (4)

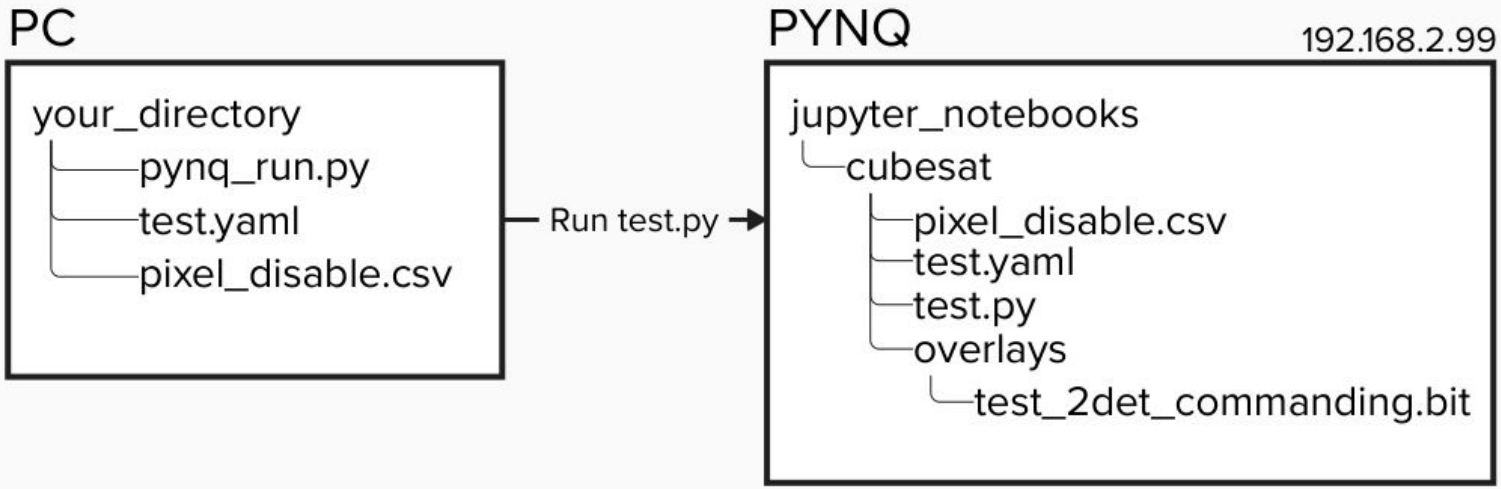

# System Overview - Get outputs (5)

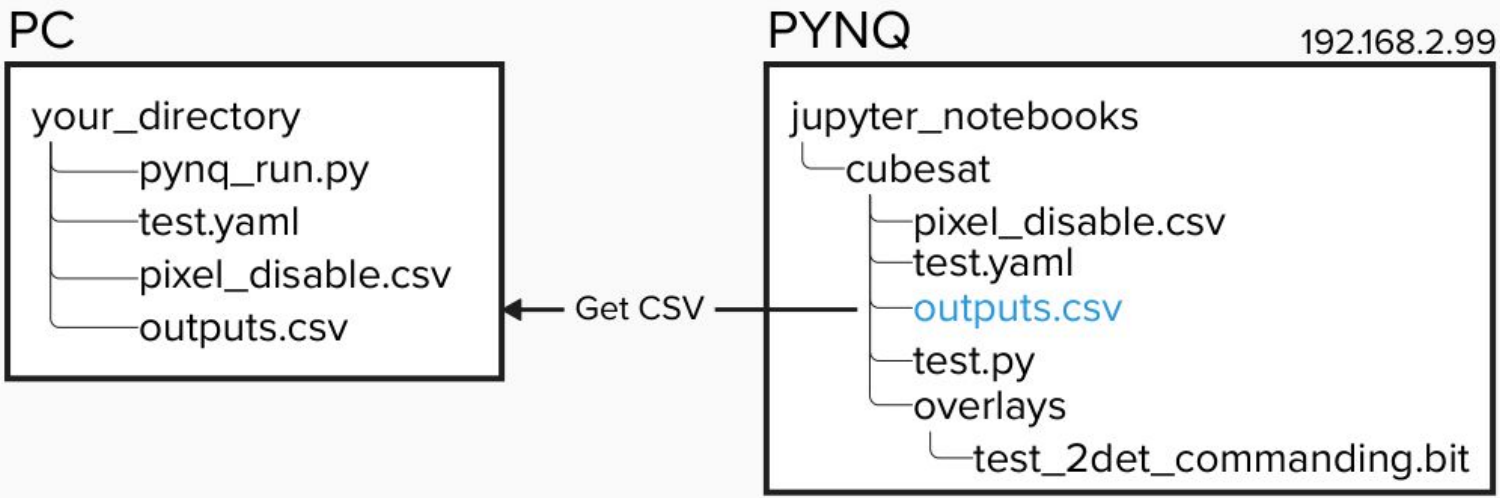

# System Overview - Cleanup and generate products (6)

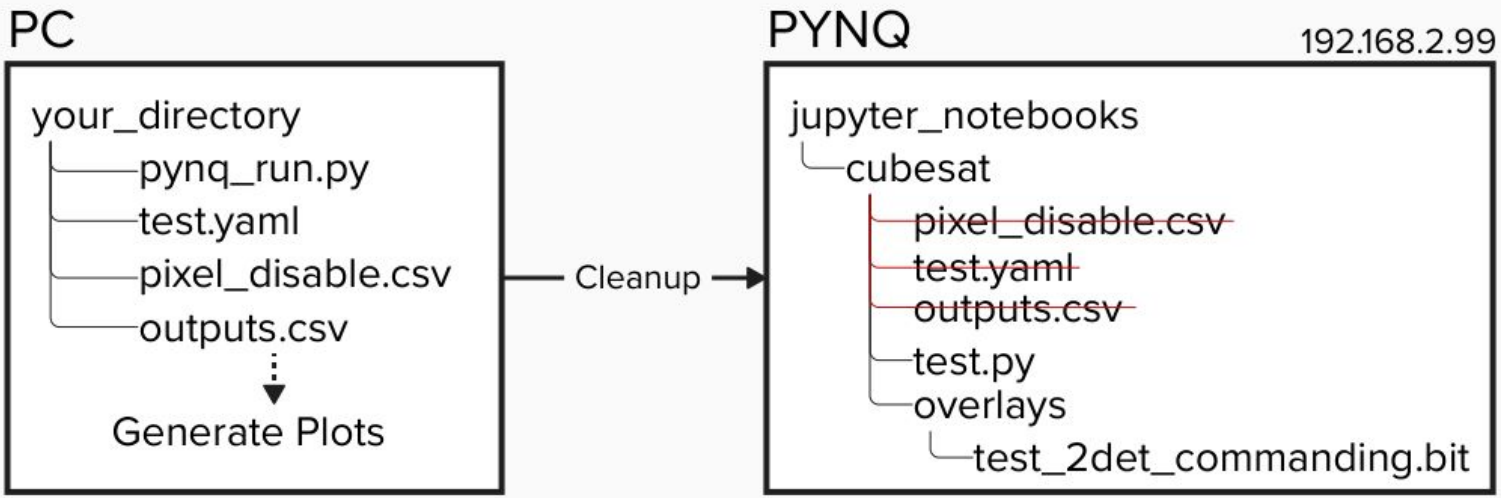

# Installation Guide - Install Python on PC (1)

- We assume python3 and pip are installed and the machine/PC runs Ubuntu or another linux distribution. We also assume the PYNQ is configured with the same image and files as in STAR Lab.

- If python is not installed, this can be done using apt.

# Installation Guide - venv creation (2)

- In your chosen working directory, create a virtual environment (venv) with your chosen name (on PC).

```
python3 -m venv <your_venv_name>
```

**Eg:**

```
python3 -m venv pynq-rce
```

- Once the venv is created, we need to install all the required python packages.

```
source ./<your_venv_name>/bin/activate

pip install paramiko pyyaml numpy pandas matplotlib seaborn
```

# Installation Guide - venv creation (2)

- You should now have the following directory structure:

```
└── your_directory/
    └── your_venv_name
```

# Installation Guide - move files on PC (3)

- Move pynq_run.py into your working folder.

- You can optionally move test.yaml and pixel_disable.csv into this folder if convenient, however these can be in any other directory of your choice as well.

- You should now have the following directory structure:

```
└── your_directory/
    ├── your_venv_name/
    ├── pynq_run.py
    ├── test.yaml (optional)
    └── pixel_disable.csv (optional)
```

# Installation Guide - move files to PYNQ (3)

- Choose your PYNQ working directory. This should ideally be within /home/xilinx/jupyter_notebooks.

- For example, say you are using /home/xilinx/jupyter_notebooks/cubesat as in our setup.

- Move test.py into this directory via the jupyter menu. The jupyter_notebooks directory is write-protected by default, so the following set of commands can be used:

```
scp <path_to_test.py> xilinx@192.168.2.99:/tmp/test.py
ssh xilinx@192.168.2.99
sudo mv /tmp/test.py /home/xilinx/jupyter_notebooks/cubesat/test.py
```

# Installation - Add path to .yaml (4)

- You must set the pynq_path parameter in your input .yaml to the path chosen in the previous step. **Eg: “**/home/xilinx/jupyter_notebooks/cubesat”

- Installation is now done and you can proceed to use the script following the instructions in README.md