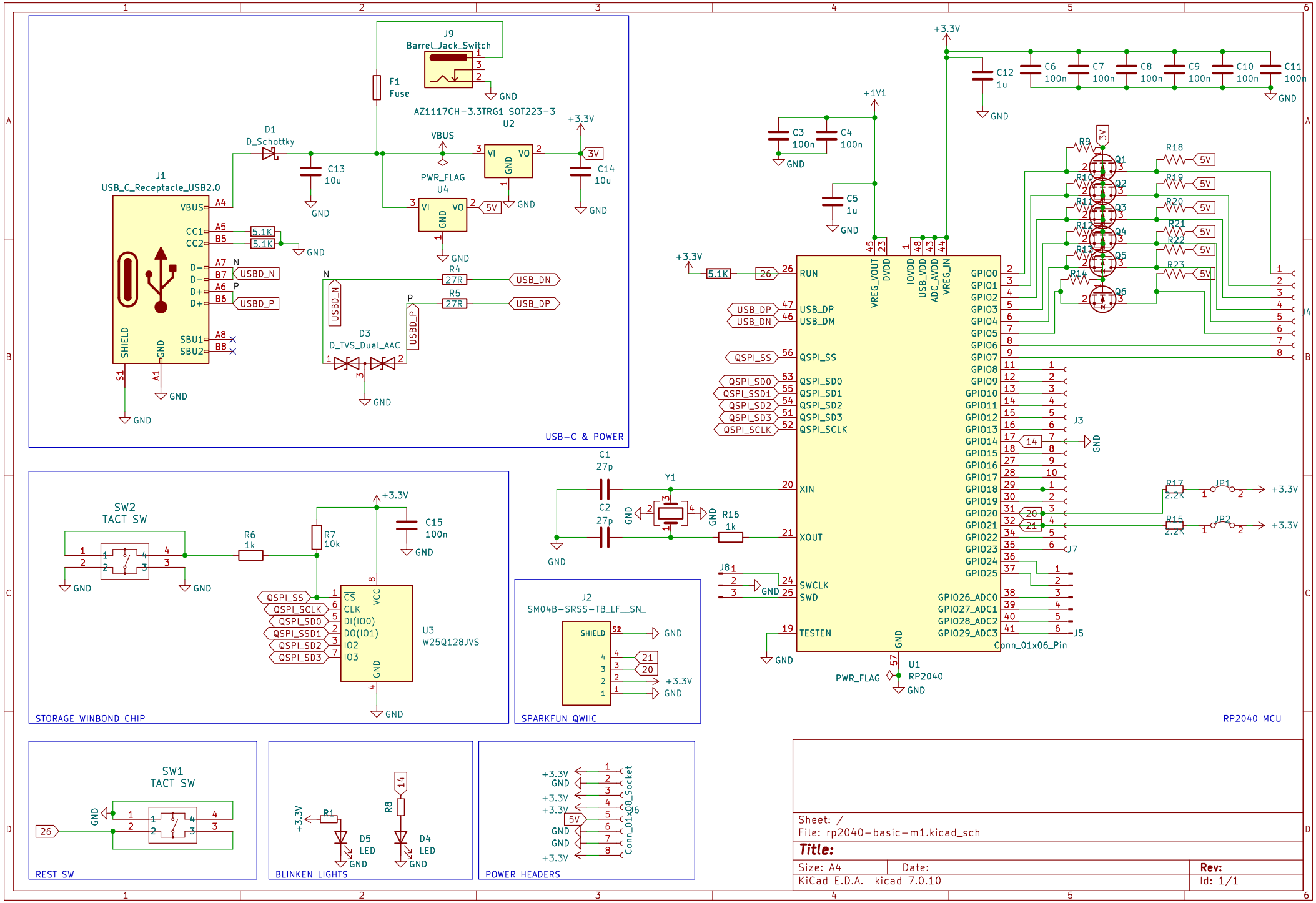


Sheet: /
File: rp2040-basic-m1.kicad_sch

**Title:**

| Size: A4 | Date: | Rev: |
|---|---|---|
| KiCad E.D.A. kicad 7.0.10 | | Id: 1/1 |