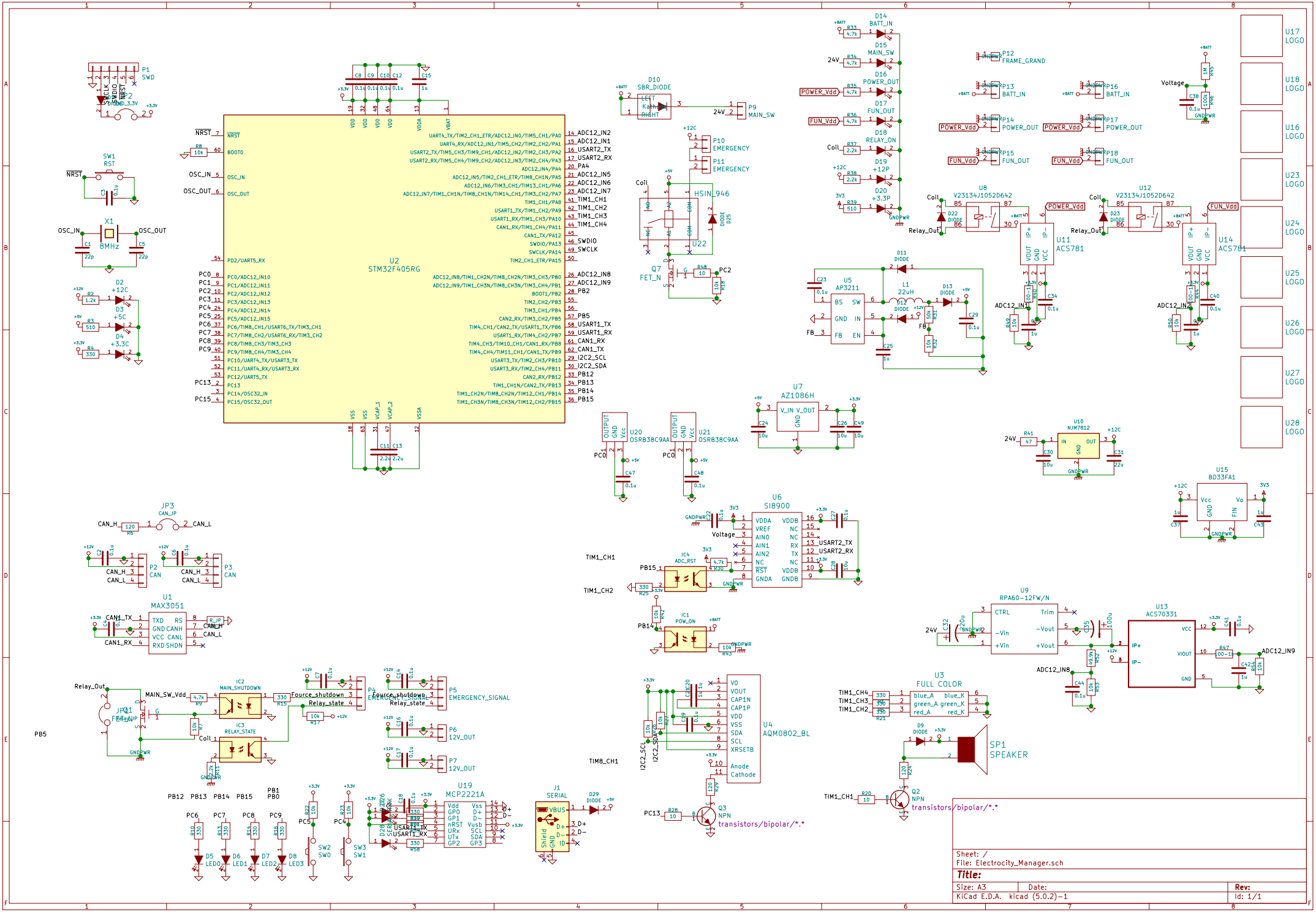
U2
STM32F405RG
U1
MAX3051
U4
AQM0802_BL
U3
FULL COLOR
U19
MCP2221A
U8
V23134J1052D642
U11
ACS781
U12
V23134J1052D642
U14
ACS781
U5
AP3211
U7
AZ1086H
U6
SI8900
U9
RPA60-12FW/N
U13
ACS70331
U10
NJM7812
U15
BD33FA1
U20
OSRB38C9AA
U21
OSRB38C9AA
D10
SBR_DIODE
P9
MAIN_SW
P10
EMERGENCY
P11
EMERGENCY
HSIN_946
U22
Q7
FET_N
Q3
NPN
transistors/bipolar/*.*
Q2
NPN
transistors/bipolar/*.*
SP1
SPEAKER
J1
SERIAL
P1
SWD
X1
8MHz
SW1
RST
JP3
CAN_JP
P2
CAN
P3
CAN
JP1
FEEDBACK
IC2
MAIN_SHUTDOWN
IC3
RELAY_STATE
IC4
ADC_RST
IC1
POW_ON
P4
EMERGENCY_SHUTDOWN
P5
EMERGENCY_SIGNAL
P6
12V_OUT
P7
12V_OUT
SW2
SW0
SW3
SW1
D5
LED0
D6
LED1
D7
LED2
D8
LED3
U17
LOGO
U18
LOGO
U16
LOGO
U23
LOGO
U24
LOGO
U25
LOGO
U26
LOGO
U27
LOGO
U28
LOGO
Sheet: /
File: Electrocity_Manager.sch
Title:
Size: A3
Date:
Rev:
KiCad E.D.A. kicad (5.0.2)-1
Id: 1/1