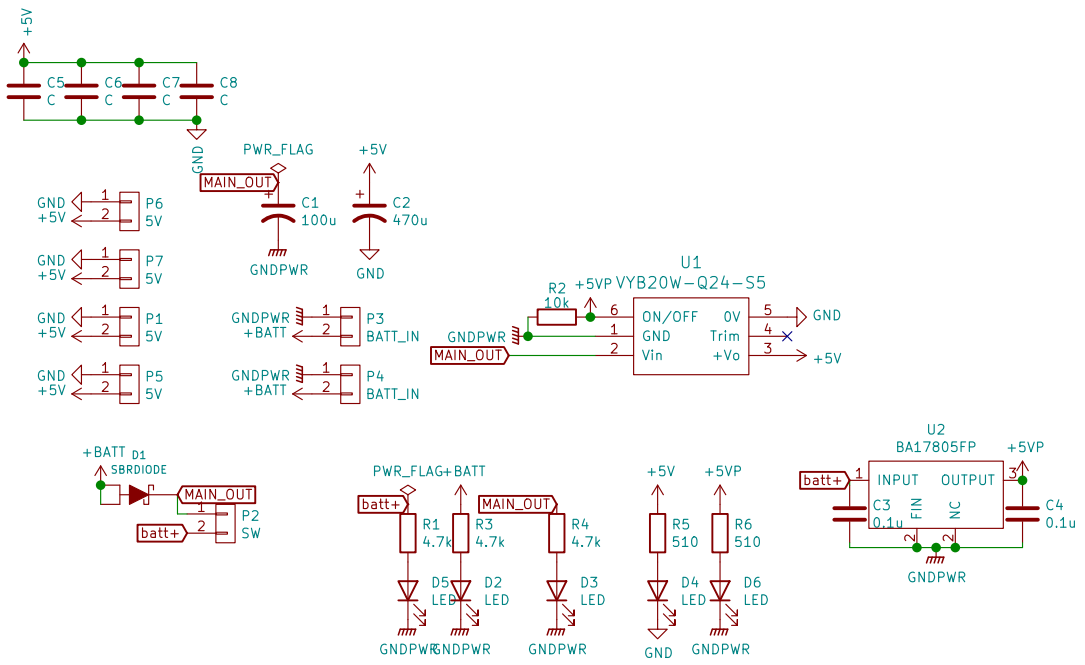


Sheet: /
File: Jetson_Nano_Power.sch

**Title:**

| Size: A4 | Date: | **Rev:** |
|---|---|---|
| KiCad E.D.A. eeschema (5.1.6)-1 | | Id: 1/1 |