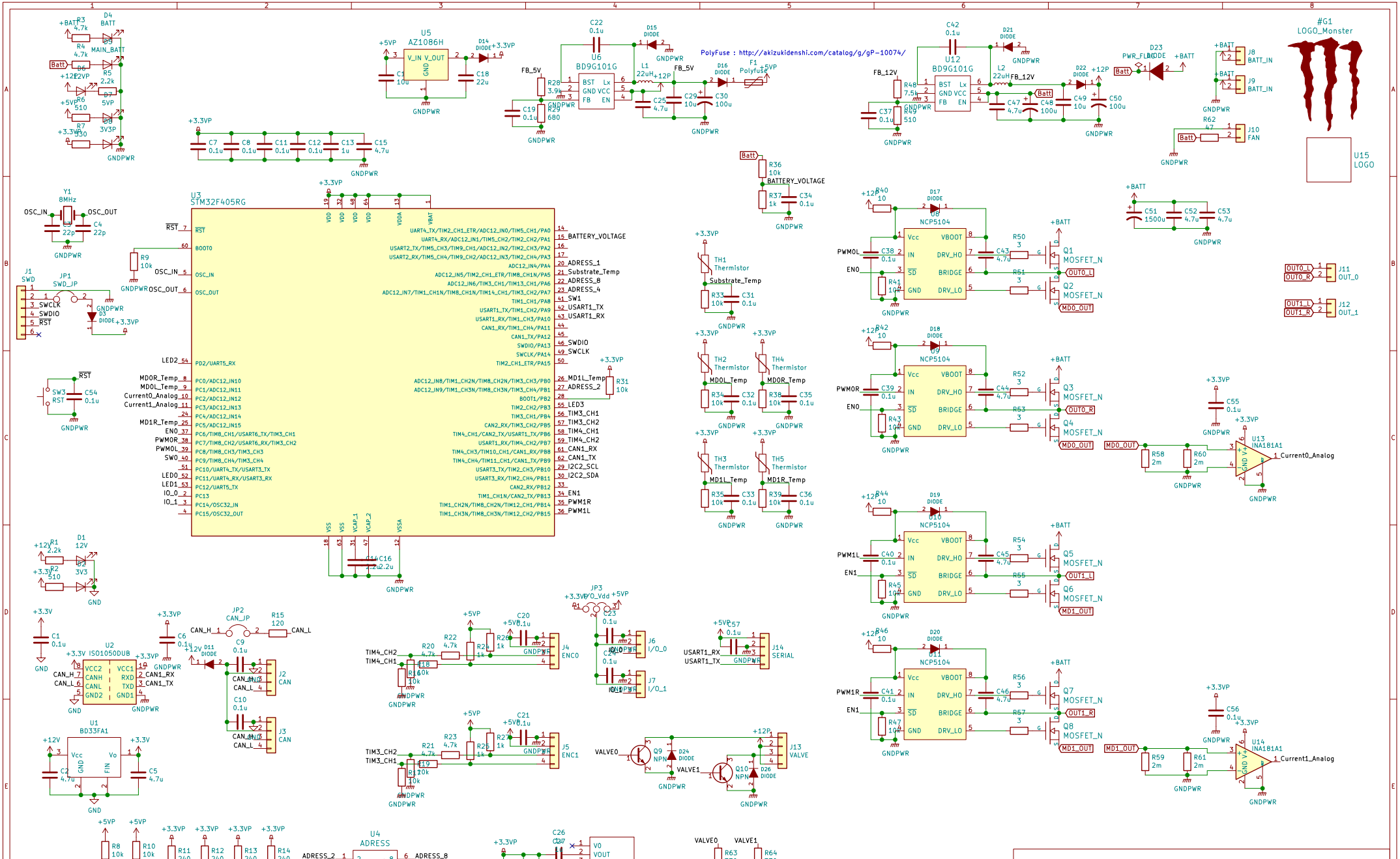
U3
STM32F405RG
U5
AZ1086H
U6
BD9G101G
U12
BD9G101G
U8
NCP5104
U9
NCP5104
U10
NCP5104
U11
NCP5104
U13
INA181A1
U14
INA181A1
U2
ISO1050DUB
U1
BD33FA1
U4
ADRESS
U7
AQM0802
PolyFuse : http://akizukidenshi.com/catalog/g/gP-10074/
#G1
LOGO_Monster
U15
LOGO
Sheet: /
File: CAN_Current_Control_MD.sch
Title:
Size: A3
Date:
Rev:
KiCad E.D.A. kicad (5.1.4)-1
Id: 1/1