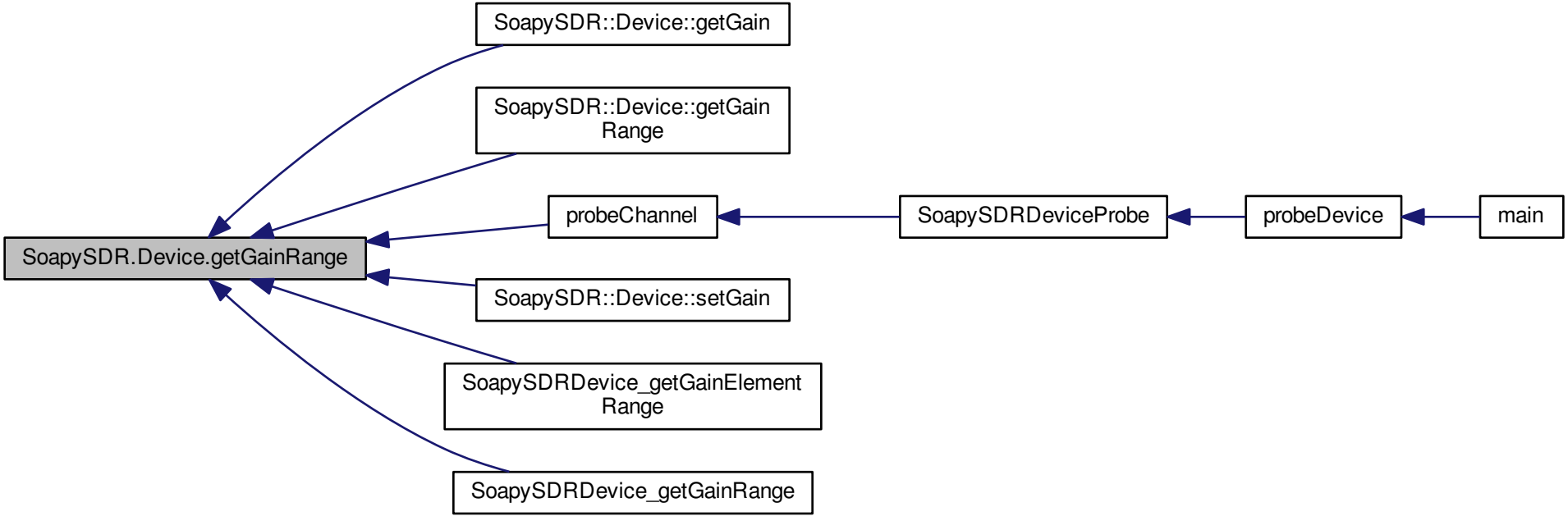
SoapySDR::Device::getGain
SoapySDR::Device::getGain Range
probeChannel
SoapySDRDeviceProbe
probeDevice
main
SoapySDR.Device.getGainRange
SoapySDR::Device::setGain
SoapySDRDevice_getGainElement Range
SoapySDRDevice_getGainRange