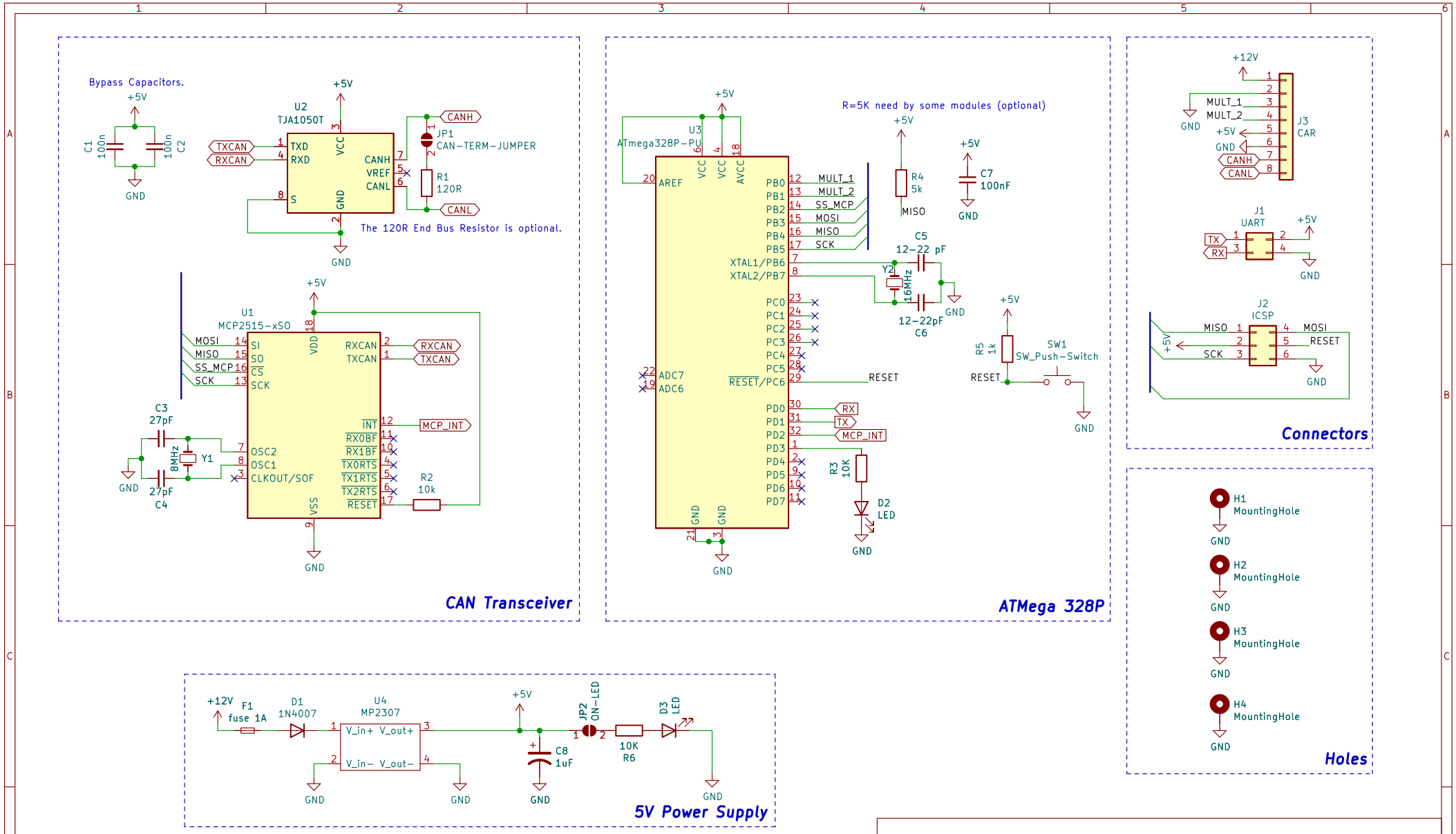

Augusto Samuel Hernández Martín

Sheet: /

File: CanBus-Radio-VAG.kicad_sch

Title: CANBUS Radio VAG Controller

Size: A4	Date: 2023-01-14	Rev: 1.0
KiCad E.D.A. kicad (6.0.9)		Id: 1/1