306-26730 56th Avenue
Aldergrove, BC, Canada, V4W 3X5
Free: 1-877-724-5427
Phone: 604-626-4373 / Fax: 604-626-4372
Email: info@innovativealuminum.com
Website: www.innovativealuminum.com

Taking your railing concepts to completion

Innovative Aluminum Systems Flex-Rail Installation Guide

Disclaimer:

This guide is not intended to replace a trained professional installer. The drawings and instructions contained within are for demonstration purposes only. All uses of this product are to conform with local building codes. Proper safety precautions and safe work practices should be followed at all times while installing this product. Innovative Aluminum Systems does not accept any liability for any damages, except as noted in the warranty.

In Exploded Overview Shown Below:

A At all posts: 1.72" square post with 4"x 4" x 3/8" base plates (Option to use fascia posts)
B At top of all mid-posts: post mount plates
C At corner post: 90° sleeve with 1" mount
D At left: Top rail termination to house with wall mount (Option to use inside sleeve)
E At Right: Top rail termination with end cap
F At Left: bottom rail connection using bottom wall mount to house
G At all posts: bottom rail connection using bottom wall mount plate (Option to use bottom wall mounts)
H At picket sections: Flex Rail insert panels
I At top rails: Square profile flex/glass top-rail (Option to use Round, Flat or Colonial profiles)

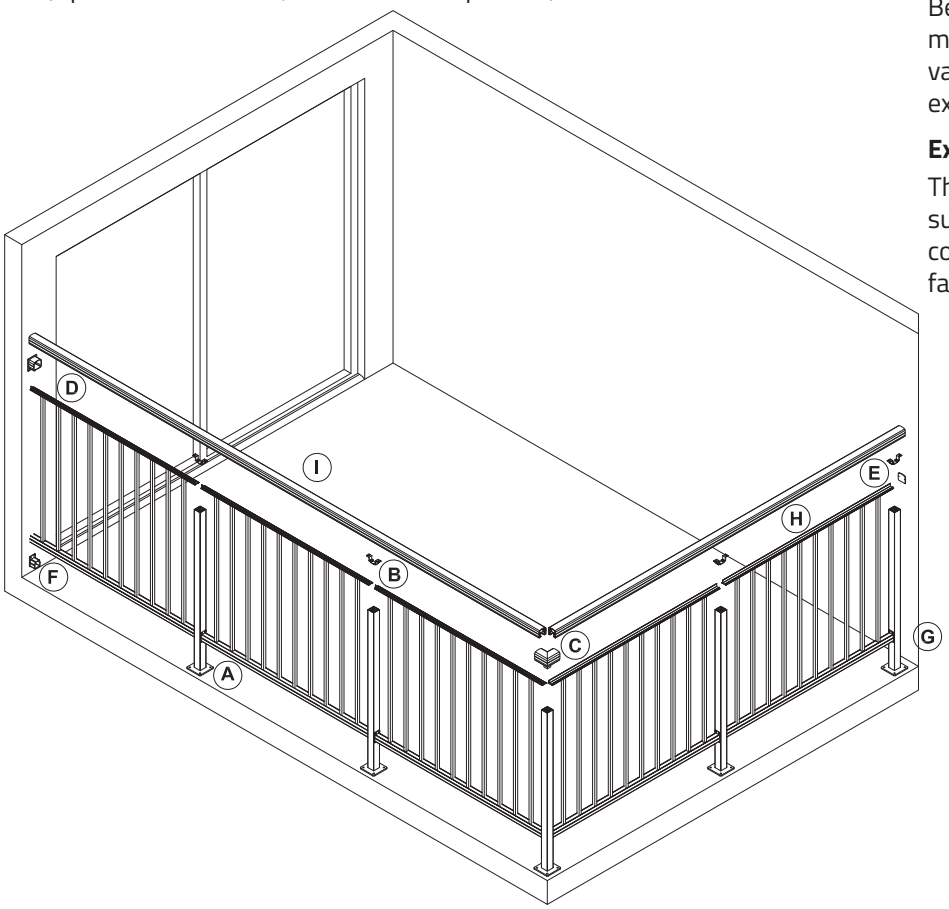

Tools Needed to Install

- Miter saw and carbide-tipped blade
- Power drill
- Tape measure
- Level
- Safety goggles and hearing protection
- Extension cords
- Drill bits
- #2 & #3 Robertson square driver bits
- Pencil
- Angle finder

Note about deck fasteners

Because deck construction and municipal code-requirements vary, deck fasteners have been excluded from these instructions.

Example Deck

The example deck is depicted using surface mount posts. Flex rail is also compatible with Innovative Aluminum's fascia mount posts.

Digital Copy Access

Please call Innovative Aluminum for a copy or scan the QR code below using NeoReader or similar application.

THE MATERIAL CONTAINED HEREIN IS PROPRIETARY TO INNOVATIVE ALUMINUM SYSTEMS INC. AND SHALL NOT BE REPRODUCED, DISCLOSED,OR USED FOR ANY OTHER PURPOSE WITHOUT THE WRITTEN CONSENT OF INNOVATIVE ALUMINUM INC.

306-26730 56th Avenue
Aldergrove, BC, Canada, V4W 3X5
Free: 1-877-724-5427
Phone: 604-626-4373 / Fax: 604-626-4372
Email: info@innovativealuminum.com
Website: www.innovativealuminum.com

Taking your railing concepts to completion

Innovative Aluminum Systems Flex-Rail Installation Guide

Step 1: Determine sleeve post locations
Trim top rail sleeve post(s) down by 1/8". Secure post(s) to deck and loosely install the sleeve(s) onto posts.
Note: If inside sleeve is to be used to extend railing beyond 20', ensure that the cut sizes allow for the splice to be centered overtop of the post. Inside sleeve posts are not trimmed down.

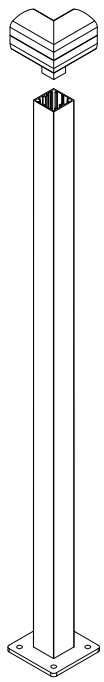

Corner Sleeve Post

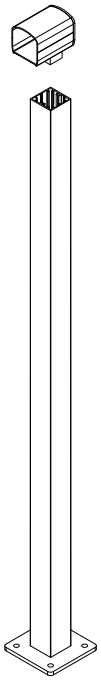

End Sleeve Post

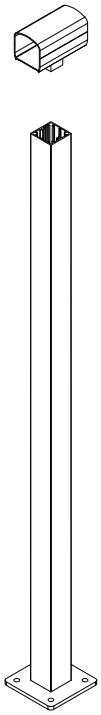

Center Sleeve Post

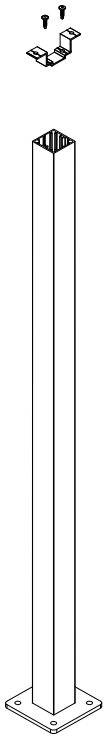

Inside Sleeve Post

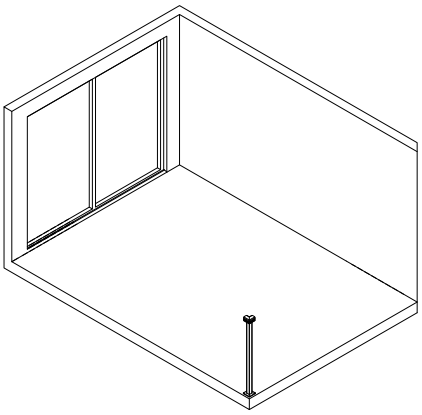

Note regarding inside sleeve:
If railing uses inside sleeve it should be fastened together now and set aside for use in step 2. Also, at this time, install a Glass/Flex rail post mount plate to the top of the inside sleeve post using (2) #10x3/4" tec screws. As mentioned above, be sure to coordinate the splice with the post location.

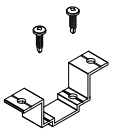

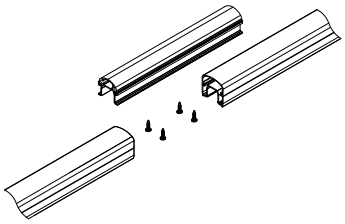

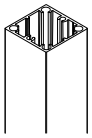

THE MATERIAL CONTAINED HEREIN IS PROPRIETARY TO INNOVATIVE ALUMINUM SYSTEMS INC. AND SHALL NOT BE REPRODUCED, DISCLOSED,OR USED FOR ANY OTHER PURPOSE WITHOUT THE WRITTEN CONSENT OF INNOVATIVE ALUMINUM INC.

306-26730 56th Avenue
Aldergrove, BC, Canada, V4W 3X5
Free: 1-877-724-5427
Phone: 604-626-4373 / Fax: 604-626-4372
Email: info@innovativealuminum.com
Website: www.innovativealuminum.com

Taking your railing concepts to completion

Innovative Aluminum Systems Flex-Rail Installation Guide

Step 2: Determine end conditions for railing and install top rail.

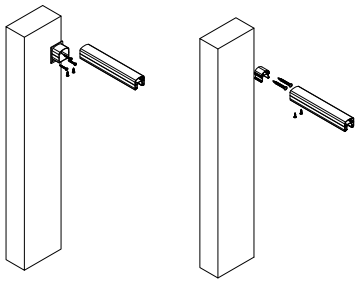

Wall Options - Railings ending at... Wall Mount (Left) or Inside Sleeve (Right)

- Attach top wall mount at the appropriate location to line up with the connecting sleeve
  Use (3) #12 x 1 1/2" PH screws
- Align inside sleeve with the connecting sleeve and attach
  Use (2) #14 x 3" PH screws
- Determine top rail length and cut as required
- Insert top rail to into wall mount or around inside sleeve and into connecting sleeve
- Secure top rail at termination point. Use (2) #10x3/4" tec screws
- Secure top rail connecting sleeve to post (90° in dwg). Use (2) #10x3/4" tec screws
- Secure top rail to connecting sleeve (90° in dwg). Use (4) #10x3/4" tec screws (2/side)

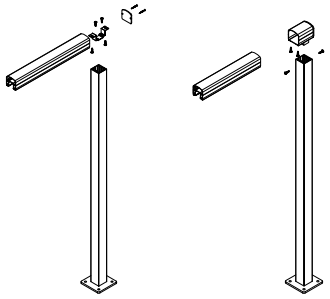

1.72" Post Options - Railings ending at... End Cap (Left) or End Sleeve (Right)

- If using an end cap, align end post with connector post and secure to deck
- Install Glass/Flex rail post mount plate to end post. Use (2) #10x3/4" tec screws
- Determine top rail length and cut as required
- If using an end cap, screw onto painted end of top rail. Use (2) #8x 1 1/4" screws
- Insert cut end of top rail into connecting sleeve & on top of end post or...
- If using end sleeve, insert end of rail into end sleeve.
- Secure top rail corner sleeves to posts. Use (2) #10x3/4" tec screws for each sleeve
- Secure top rail to center or corner sleeve. Use (4) #10x3/4" tec screws (2/side)
- If using end cap, secure Glass/Flex rail mount plate to top rail.
  Use (2) #10x3/4" tec screws

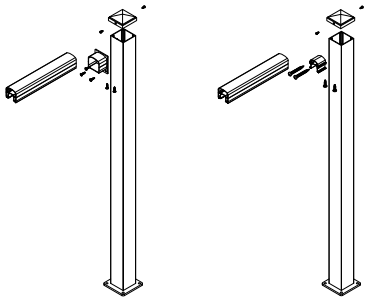

2.5" Post Options - Railings ending at... Wall Mount (Left) or Inside Sleeve (Right)

- Attach top wall mount at the appropriate location. Use (3) #10x3/4" tec screws
  Or...
- Attach top rail inside sleeve at the appropriate location. Use (2) #14x2" screws
- Align 2 1/2" post with connecting sleeve post and determine mounting location
- Determine top rail length and cut as required.
- Slide top rail into wall mount or over inside sleeve and into connecting sleeve
- Fasten 2 1/2" post to deck
- Secure top rail to wall mount or inside sleeve. Use (2) #10x3/4" tec screws
- Secure top rail to connecting sleeve. Use (4) #10x3/4" tec screws (2 per side)
- Secure top rail connecting sleeve to post. Use (2) #10x3/4" tec screws
- Attach pyramid cap to top of 2.5" post. Use (2) #8x1/2" tec screws

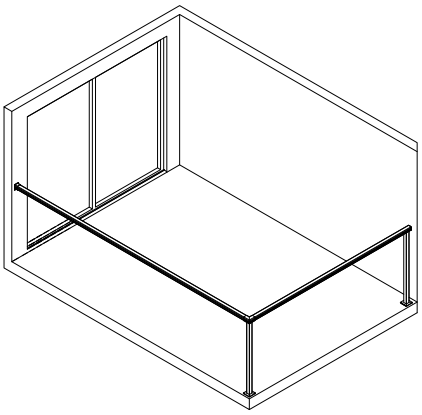

Securing Top Rail to Top Rail Connecting Sleeves and their Posts

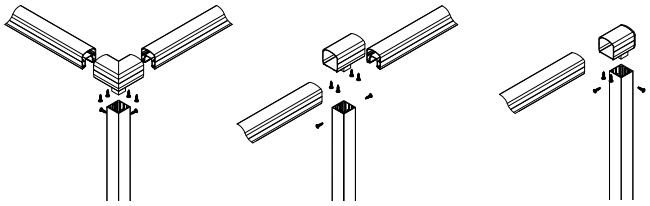

THE MATERIAL CONTAINED HEREIN IS PROPRIETARY TO INNOVATIVE ALUMINUM SYSTEMS INC. AND SHALL NOT BE REPRODUCED, DISCLOSED,OR USED FOR ANY OTHER PURPOSE WITHOUT THE WRITTEN CONSENT OF INNOVATIVE ALUMINUM INC.

306-26730 56th Avenue
Aldergrove, BC, Canada, V4W 3X5
Free: 1-877-724-5427
Phone: 604-626-4373 / Fax: 604-626-4372
Email: info@innovativealuminum.com
Website: www.innovativealuminum.com

Taking your railing concepts to completion

Innovative Aluminum Systems Flex-Rail Installation Guide

Step 3: Determine number of mid posts required and their locations.
For each mid-post or inside sleeve post:

- Install Glass/Flex rail post mount plates to mid posts using (2) #10x3/4" tec screws each
- Insert posts below rail, aligning the post mount plates with the recess on the underside of the top rail
- Secure post mount plates to inside of top rail using (2) #10x3/4" tec screws
- Level posts

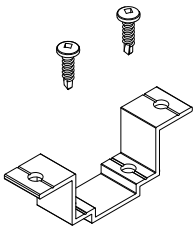

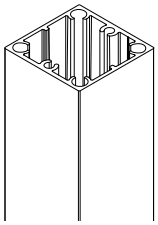

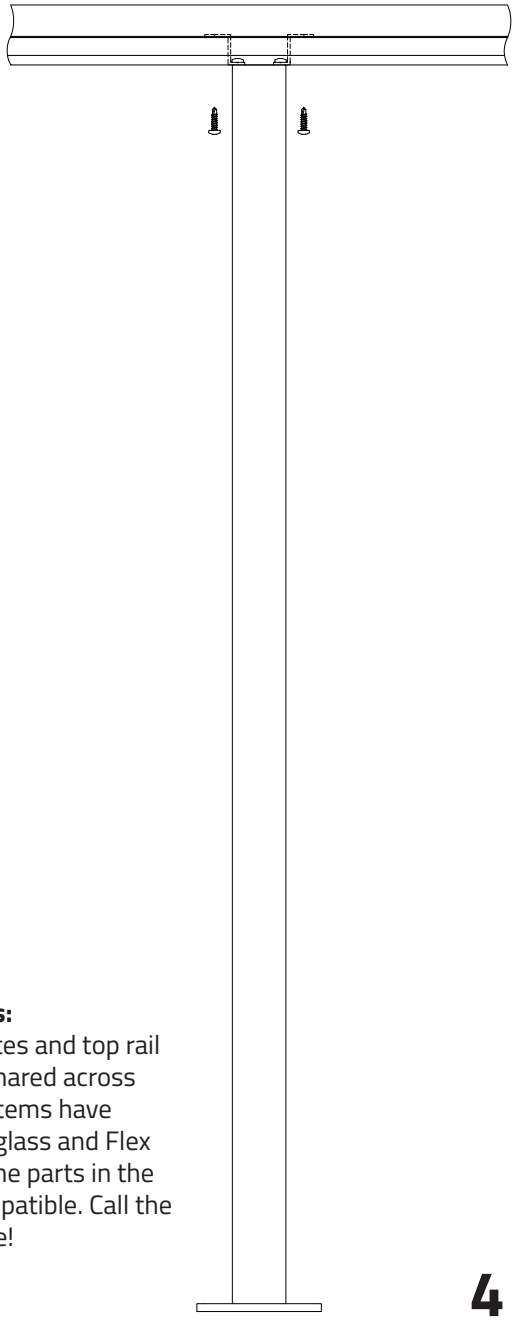

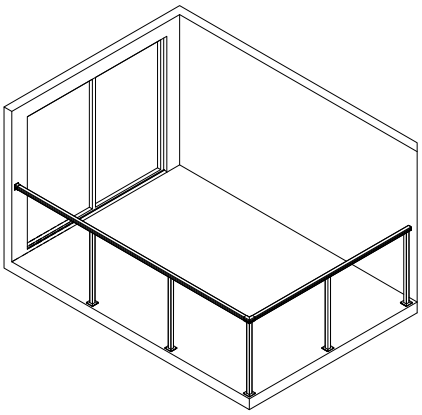

Note regarding common parts:
Glass/Flex rail post mount plates and top rail are, as their name suggests, shared across two product lines. These two items have similar roles in the Innovative glass and Flex Rail systems. Many of the of the parts in the Innovative lines are cross-compatible. Call the number above to find out more!

THE MATERIAL CONTAINED HEREIN IS PROPRIETARY TO INNOVATIVE ALUMINUM SYSTEMS INC. AND SHALL NOT BE REPRODUCED, DISCLOSED,OR USED FOR ANY OTHER PURPOSE WITHOUT THE WRITTEN CONSENT OF INNOVATIVE ALUMINUM INC.

306-26730 56th Avenue
Aldergrove, BC, Canada, V4W 3X5
Free: 1-877-724-5427
Phone: 604-626-4373 / Fax: 604-626-4372
Email: info@innovativealuminum.com
Website: www.innovativealuminum.com

Taking your railing concepts to completion

Innovative Aluminum Systems Flex-Rail Installation Guide

Step 4: Cutting & Installing Flex-Rail Panels

Trimming & Installing Flex Rail Panels

If the deck configuration does not allow for the use of full length flex-rail panels, one or more of the panel's widths may need to be cut down. To determine your panel cut sizes begin by measuring the openings between sleeves and posts. For the bottom rails deduct 1/2" at each location that uses a wall mount and 1/8" for each location that uses a bottom wall mount plate.

For bottom wall mounts, loosely fit them over the bottom rail end as required. For bottom wall mount plates, screw them to the end of the bottom rails as required.

With the tall side of the panel toward you, insert the top edge of the panel into the recess at the underside of the top rail (Fig.1). Make sure to engage the nearest locking edge before fully inserting the panel (Fig.2). Angle the panel at first and then straighten it vertically. While applying moderate upward force, pivot the panel until the bottom rail is centered on the post and the farthest locking edge snaps into place. From below, use three (3) 12x1 1/2 tec screws to secure the panel to the top rail (Fig.3).

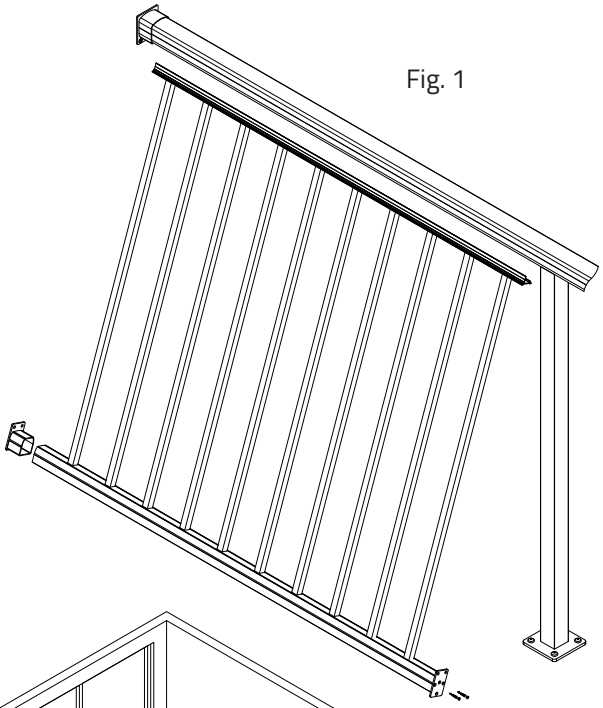
Fig. 1

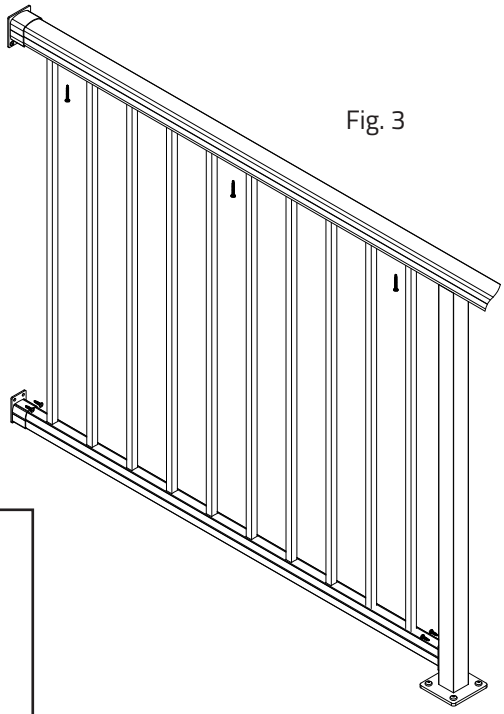
Fig. 3

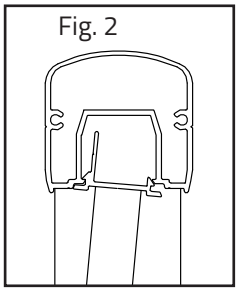
Fig. 2

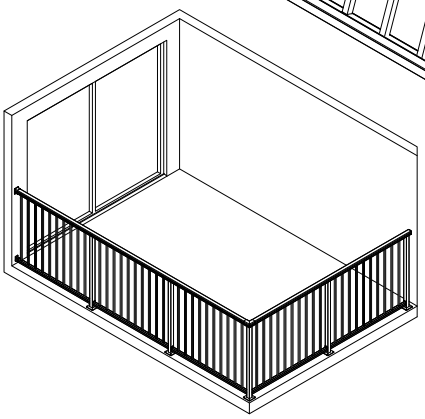

Step 5: Fastening Bottom Mounts & Finishing The Railing Installation.
Ensure that all posts are fastened to the deck and that all insert panels are installed. Check that all bottom sleeves and top rail connecting sleeves are fully installed. Ensure that all top rails are attached to the posts. Confirm that all screws and fasteners are tight and that none are missing.

THE MATERIAL CONTAINED HEREIN IS PROPRIETARY TO INNOVATIVE ALUMINUM SYSTEMS INC. AND SHALL NOT BE REPRODUCED, DISCLOSED,OR USED FOR ANY OTHER PURPOSE WITHOUT THE WRITTEN CONSENT OF INNOVATIVE ALUMINUM INC.

306-26730 56th Avenue
Aldergrove, BC, Canada, V4W 3X5
Free: 1-877-724-5427
Phone: 604-626-4373 / Fax: 604-626-4372
Email: info@innovativealuminum.com
Website: www.innovativealuminum.com

Taking your railing concepts to completion

Innovative Aluminum Systems Flex-Rail Installation Guide

In Exploded Overview Shown Below:

A At all posts: 1.72" square post with 4"x 4" x 3/8" base plates
(Option to use fascia-mount style posts)

B At bottom of stair: stair post mount plate is used at the top of the post
(Also used on mid-posts for longer runs. Note: stairs longer than 20' require use of angled stair center or inside sleeve)

C At level deck end post: End sleeve with 1" mount

D At top of stair: Top rail Flex Rail sleeve

E At bottom of stair: Top rail termination with end cap

F At top and bottom of stair: bottom rail connection using flex rail bottom wall mount

G At picket sections: Flex Rail Stair insert panel

H At top rail: Square profile flex/glass top-rail
Option to also use Round or Colonial profiles - please check with local building authorities about hand rail requirements
Flat top will typically be disallowed but may be used if a separate handrail is applied.

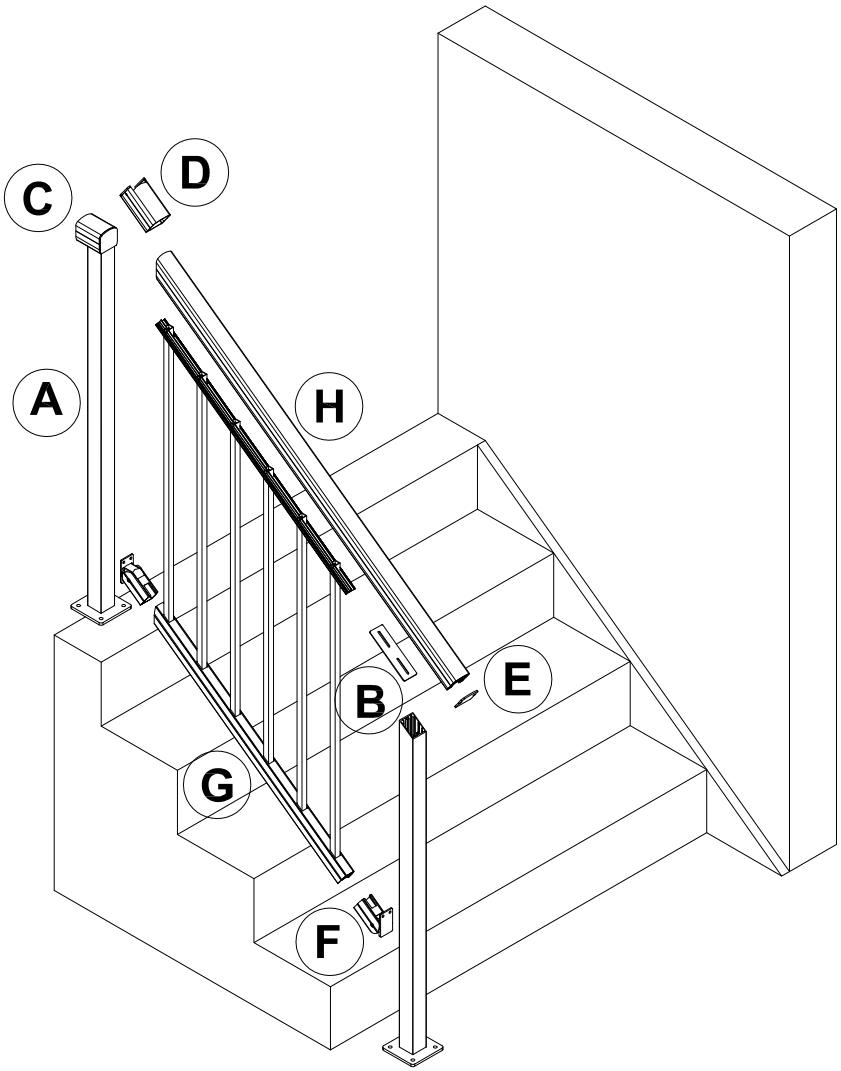

Example Stair Railing

The example stair railing is depicted using surface mount posts that transitions 42" high rail on a level deck to 36" tall stair rail. Flex rail is also compatible with Innovative Aluminum's fascia mount posts.

Understanding Surface Mounted Stair Railing

Due to stair railing rising above level stair treads the stair rail height is simply referred to from the nose of each tread. The farther back from the nose, the higher the railing is from the tread. Posts are typically set back from the nose so the set back, combined with the stair angle will determine the stair rail height at the post's position. Later in this guide you will find resources that will help determine the required post heights for your installations. This is simply one way of making these types of calculations.

THE MATERIAL CONTAINED HEREIN IS PROPRIETARY TO INNOVATIVE ALUMINUM SYSTEMS INC. AND SHALL NOT BE REPRODUCED, DISCLOSED,OR USED FOR ANY OTHER PURPOSE WITHOUT THE WRITTEN CONSENT OF INNOVATIVE ALUMINUM INC.

306-26730 56th Avenue
Aldergrove, BC, Canada, V4W 3X5
Free: 1-877-724-5427
Phone: 604-626-4373 / Fax: 604-626-4372
Email: info@innovativealuminum.com
Website: www.innovativealuminum.com

Taking your railing concepts to completion

Innovative Aluminum Systems Flex-Rail Installation Guide

Step 1: Determine post locations
Secure post(s) to level deck. Mark where stair posts along the run will be fastened but don't attach them to the treads yet. Make sure that posts receiving a post mount plate have their screw ports in line with the stair's length.

Step 2: Prepare end post for the top rail (longer runs may have mid posts and if so will need to be prepared as well)

- Use an angle finder to determine the stair angle so that the post cut corresponds to the angle
- To determine the proper cut length please refer to figure 1.
- Using the nose to nose points shown at either end of the dashed line determine dimension B
- From the top of dimension B measure 36" up and create a mark
- Refer to the "Trim Dimension" table below to determine dimension A
  (the appropriate trim dimension, based on the angle of the stairs)
  Note: The trim dimension is not from the top of the post, but from the 36" mark made from dimension B
- Make the appropriate angle cuts and fasten the posts to stair treads

Fig. 1

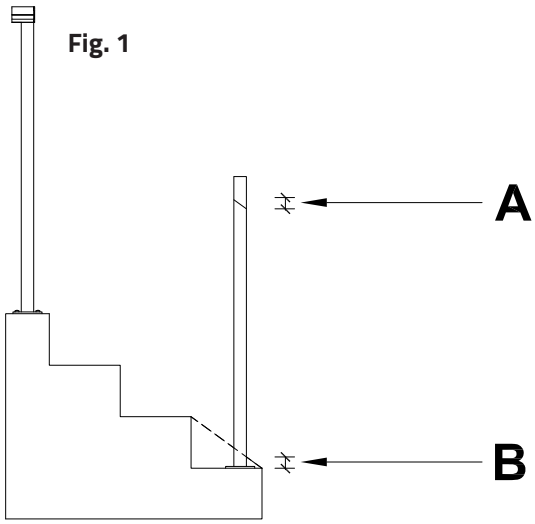

NOTE: STAIR MID AND END POSTS WILL BE SUPPLIED OVER-HEIGHT TO ALLOW FOR ANGLE CUTTING

Trim Dimension	
Angle Range	Trim Dim.
1 - 7	1 15/16
8 - 16	2
17 - 21	2 1/16
22 - 25	2 1/8
26 - 28	2 3/16
29 - 31	2 1/4
32 - 33	2 5/16
34 - 35	2 3/8
36 - 37	2 7/16
38 - 39	2 1/2
40 - 41	2 9/16
42	2 5/8
43 - 44	2 11/16
45	2 3/4
46	2 13/16
47	2 7/8

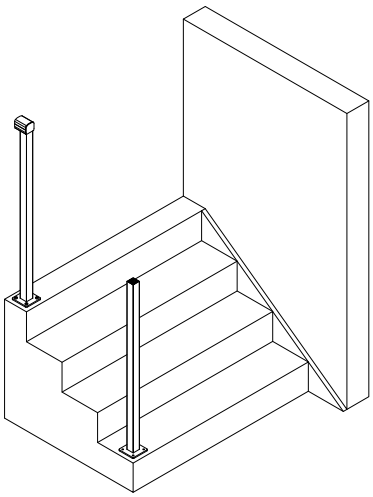

The overall post height can be determined by using this formula:
36" less Dim. A plus Dim. B

THE MATERIAL CONTAINED HEREIN IS PROPRIETARY TO INNOVATIVE ALUMINUM SYSTEMS INC. AND SHALL NOT BE REPRODUCED, DISCLOSED,OR USED FOR ANY OTHER PURPOSE WITHOUT THE WRITTEN CONSENT OF INNOVATIVE ALUMINUM INC.

306-26730 56th Avenue
Aldergrove, BC, Canada, V4W 3X5
Free: 1-877-724-5427
Phone: 604-626-4373 / Fax: 604-626-4372
Email: info@innovativealuminum.com
Website: www.innovativealuminum.com

Taking your railing concepts to completion

Innovative Aluminum Systems Flex-Rail Installation Guide

Step 3: Installing the post mount stair plate

- Secure the post mount stair plate to the top of the post using (2) #10x3/4" tec screws (Fig. 2)

Step 4: Locating top rail flex sleeve

- Using the nose to nose points shown at either end of the dashed line as a guide, locate and mark dimension B
- Determine and mark the installation location of the top rail flex sleeve by adding 36" to dimension B
  Note: in most cases stair rail height will be 36" (at the nose of the stair). Where a different height is required, substitute 36" with the desired rail height for dimension A.

Fig. 1

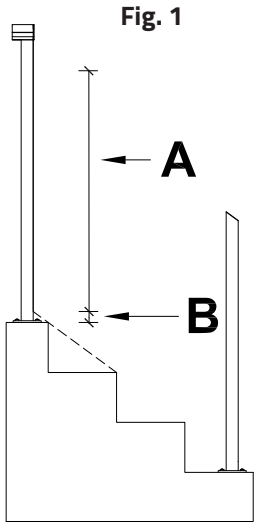

Determining the top rail flex sleeve's location can be described with the following formula:

Where Dim. A is the desired stair rail height,

Dimension A + Dimension B = Sleeve location* (at top of sleeve)

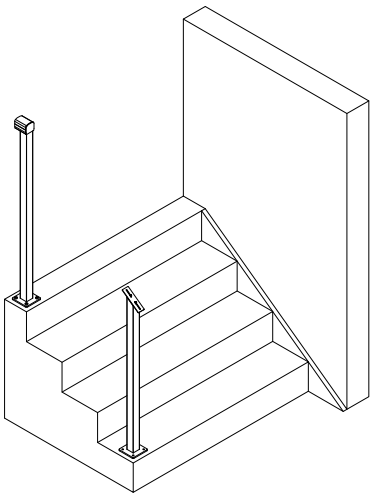

Fig. 2

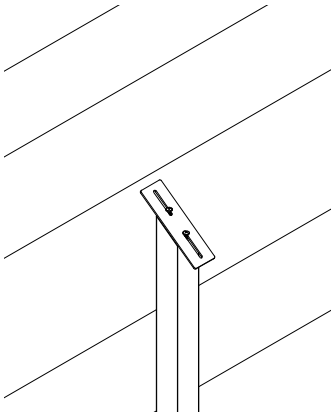

THE MATERIAL CONTAINED HEREIN IS PROPRIETARY TO INNOVATIVE ALUMINUM SYSTEMS INC. AND SHALL NOT BE REPRODUCED, DISCLOSED,OR USED FOR ANY OTHER PURPOSE WITHOUT THE WRITTEN CONSENT OF INNOVATIVE ALUMINUM INC.

306-26730 56th Avenue
Aldergrove, BC, Canada, V4W 3X5
Free: 1-877-724-5427
Phone: 604-626-4373 / Fax: 604-626-4372
Email: info@innovativealuminum.com
Website: www.innovativealuminum.com

Taking your railing concepts to completion

Innovative Aluminum Systems Flex-Rail Installation Guide

Step 5: Preparing and installing the top rail with top rail flex sleeve and end cap

- Determine the length of rail needed by measuring from the post to the end of the post mount stair plate (see Fig.1)
- Cut one end of the top rail at the approximate angle of the stair to maximize the sleeve's capture of the top rail
- Slide the top rail flex sleeve over the cut end of the top rail and secure at the underside of the rail
  Use (2) #10x3/4" tec screws
- Attach the top rail end cap using (2) #8x1 1/4" screws
- Rest the top rail on the post mount stair plate and guide the top rail flex sleeve onto the post and loosely affix the top rail at the post mount stair plate using (2) #10x3/4" tec screws
- Adjust the top mount flex rail sleeve so that it aligns with the mark made in step 4 and attach using (2) #10x3/4" tec screws
- Tighten the screws at the post mount stair plate

Fig. 1

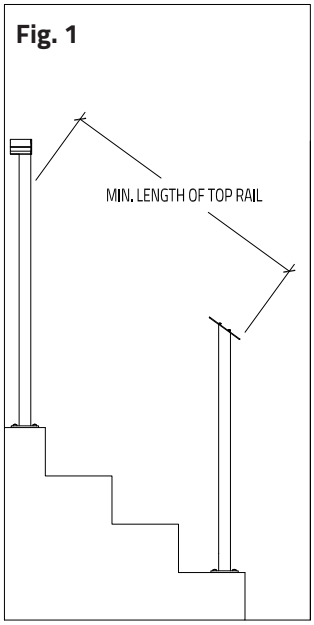

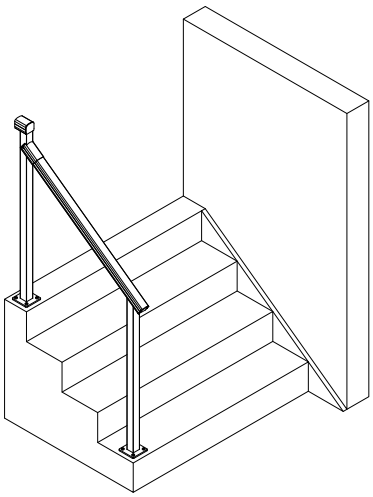

THE MATERIAL CONTAINED HEREIN IS PROPRIETARY TO INNOVATIVE ALUMINUM SYSTEMS INC. AND SHALL NOT BE REPRODUCED, DISCLOSED,OR USED FOR ANY OTHER PURPOSE WITHOUT THE WRITTEN CONSENT OF INNOVATIVE ALUMINUM INC.

306-26730 56th Avenue
Aldergrove, BC, Canada, V4W 3X5
Free: 1-877-724-5427
Phone: 604-626-4373 / Fax: 604-626-4372
Email: info@innovativealuminum.com
Website: www.innovativealuminum.com

Taking your railing concepts to completion

Innovative Aluminum Systems Flex-Rail Installation Guide

Step 6: Insert Panels

If the stair configuration does not allow for the use of full length flex-rail stair panels, one or more of the panel's widths may need to be cut down. The panel's top and bottom rails will need to have their cut lengths coordinated with the opening conditions independently as clearance will vary depending on the parts used at the installed top rail.

Determine the panel cut sizes by measuring the openings at the top and bottom as shown in figure 1

- For the insert panel's top, measure between parts that would obstruct the panel's insertion.
  Note: In our example this would be between the flex rail sleeve and the post mount stair plate.
- For the bottom rails measure between posts at the stair's angle
  Note: Deduct 1/2" at each end for the adjustable bottom stair sleeve and cut these ends square to the rail. The lower end of the panel will have the internal riveted rail protruding at the bottom rail when the insert panel is tilted to be sure to cut this end while the panel is adjusted to the appropriate angle.

Install the insert panel:
With the tall side of the panel toward you, insert the top edge of the panel into the recess at the underside of the top rail (Fig.2). Make sure to engage the nearest locking edge before fully inserting the panel (Fig.3). Angle the panel at first and then straighten it vertically. While applying moderate upward force, pivot the panel until the bottom rail is centered on the post and the farthest locking edge snaps into place. From below, use three (3) 12x1 1/2 tec screws to secure the panel to the to rail.

Step 7: Fastening Bottom Mounts & Finishing The Railing Installation.
Ensure that all posts are fastened to the deck and that all insert panels are installed. Check that all bottom sleeves and top rail connecting sleeves are fully installed. Ensure that all top rails are attached to the posts. Confirm that all screws and fasteners are tight and that none are missing.

Fig. 2

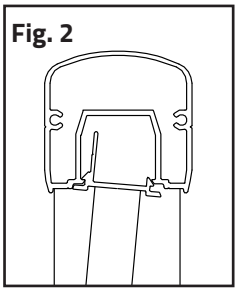

Fig. 1

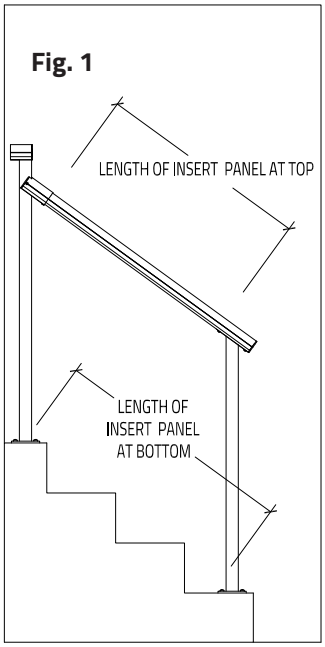

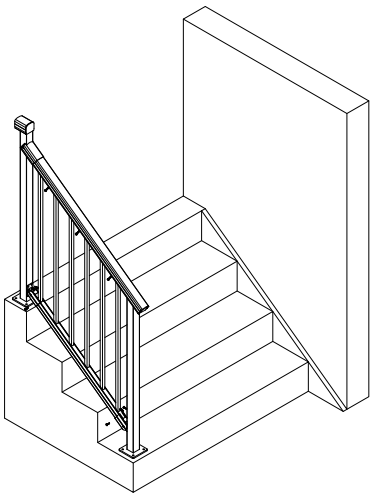

Fig. 3

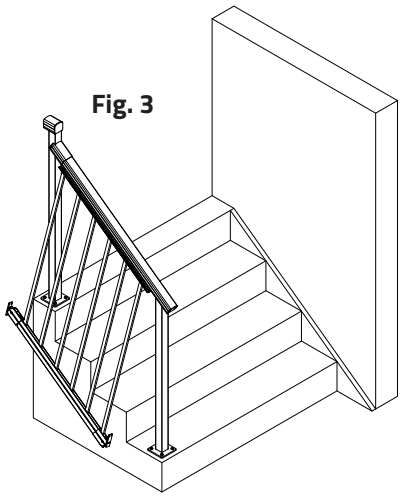

THE MATERIAL CONTAINED HEREIN IS PROPRIETARY TO INNOVATIVE ALUMINUM SYSTEMS INC. AND SHALL NOT BE REPRODUCED, DISCLOSED,OR USED FOR ANY OTHER PURPOSE WITHOUT THE WRITTEN CONSENT OF INNOVATIVE ALUMINUM INC.