Innovative Aluminum Systems Inc.
#306 - 26730 56th Ave
Aldergrove, BC V4W 3X5

Phone: 604-626-4373
Fax: 604-626-4372
Toll Free: 1-877-724-5427

www.innovativealuminum.com

E-mail: info@innovativealuminum.com

"Taking your railing concepts to completion"

Innovative Aluminum Glass Railing Installation Guide

Disclaimer:

This guide is not intended to replace a trained professional installer. The drawings and instructions contained within are for demonstration purposes only. All uses of this product are to conform with local building codes. Proper safety precautions and safe work practices should be followed at all times while installing this product. Innovative Aluminum Systems does not accept any liability for any damages, except as noted in the warranty.

Tools Needed To Install

- Miter saw and carbide-tipped blade
- Power drill
- Tape measure
- Level
- Saftey goggles and hearing protection
- Extension cords
- Drill bits
- #2 and #3 square driver bits
- Pencil
- Angle finder

Diagram A

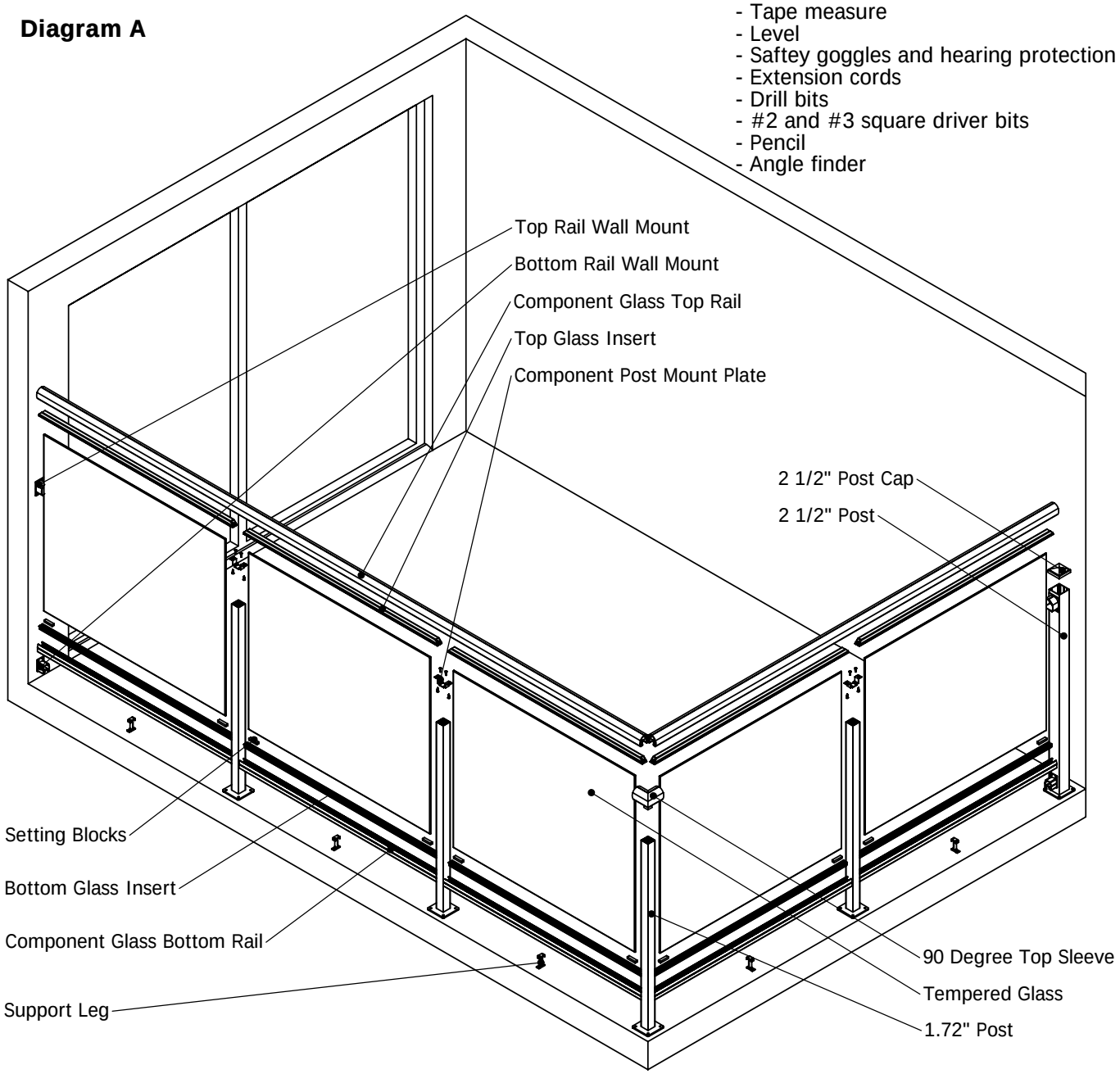

THE MATERIAL CONTAINED HEREIN IS PROPRIETARY TO INNOVATIVE ALUMINUM SYSTEMS INC. AND SHALL NOT BE REPRODUCED, DISCLOSED, OR USED FOR ANY OTHER PURPOSE WITHOUT THE WRITTEN CONSENT OF INNOVATIVE ALUMINUM INC.

Innovative Aluminum Systems Inc.
#306 - 26730 56th Ave
Aldergrove, BC V4W 3X5

Phone: 604-626-4373
Fax: 604-626-4372
Toll Free: 1-877-724-5427

www.innovativealuminum.com

E-mail: info@innovativealuminum.com

"Taking your railing concepts to completion"

Installation Notes:

- Review the deck and figure out your approximate post locations. A solid mounting surface is required at all post locations. Most railing is installed with a three Inch centerline from the deck edge, but this can be adjusted to suit site specifications.
- Ensure that you have a solid mounting surface at any location where the railing will be wall mounted to a building or similar structure.
- Posts may require a shim to be placed underneath them to keep the railing level on a sloping deck.
- Make sure to use appropriate fasteners to mount all posts and wall mounts.
- Any post that will have an outside sleeve on top may have to be trimmed in order to maintain a consistent rail height.
- Drain holes in the posts should run in the same direction as the railing.
- It is important, when attaching bottom sleeves or rail clip to the posts, to ensure that the screw chase is properly aligned.

Before installing check your local building codes to ensure you will meet any special code requirements for your area.
Common rail height is 36" or 42". The distance between posts will vary depending on the job site.

Step 1

Installation of glass bottom sleeves or rail clips

Figure out how many of each post type you will need. (ie. End, Mid, 90 Degree Corner, etc.) Using a bottom rail clip jig, install on each post, the appropriate number and type of bottom mounts. See Diagram B. At this time it is critical that you make sure the screw chase of each post is properly lined up with the railing, this will allow you to properly install any post mount plates that may be required. If you ordered posts with prewelded bottom wall mounts you can skip this step.

Diagram B

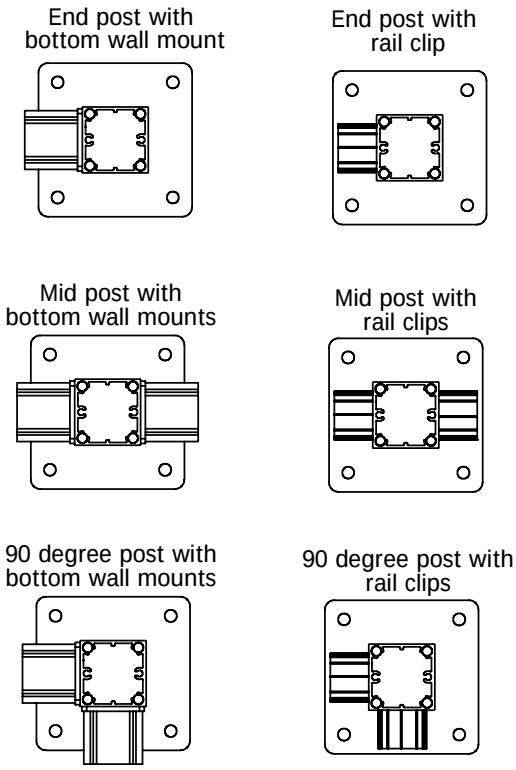

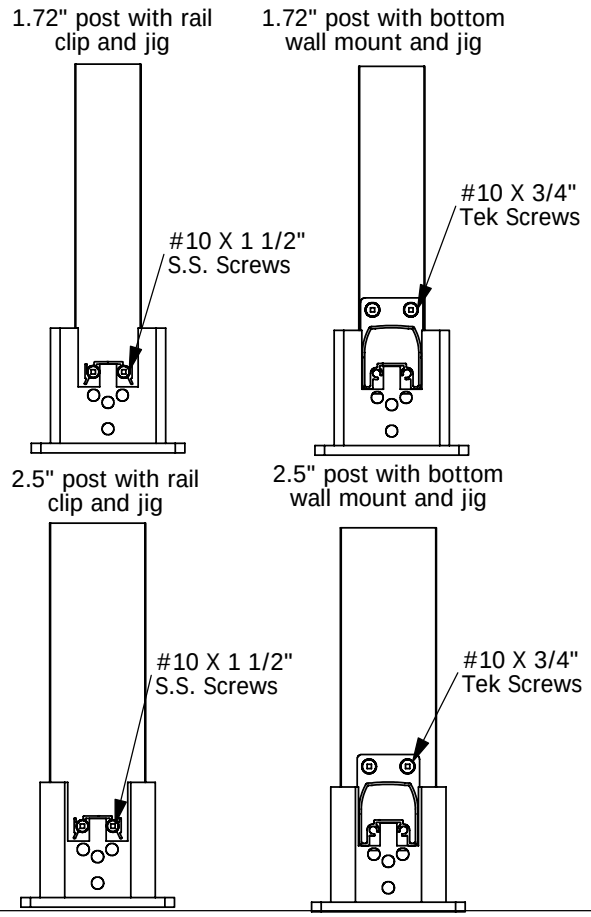

THE MATERIAL CONTAINED HEREIN IS PROPRIETARY TO INNOVATIVE ALUMINUM SYSTEMS INC. AND SHALL NOT BE REPRODUCED, DISCLOSED, OR USED FOR ANY OTHER PURPOSE WITHOUT THE WRITTEN CONSENT OF INNOVATIVE ALUMINUM INC.

INNOVATIVE ALUMINUM SYSTEMS INC
"Taking your railing concepts to completion"

Innovative Aluminum Systems Inc.
#306 - 26730 56th Ave
Aldergrove, BC V4W 3X5

www.innovativealuminum.com

Phone: 604-626-4373
Fax: 604-626-4372
Toll Free: 1-877-724-5427

E-mail: info@innovativealuminum.com

Step 2
Determining Sleeve Posts

Trim any posts that require a top sleeve to be installed. The overall post height should be 1/8 of an inch less than posts that use a post mount plate. (Or to be 2" closer to the deck than the desired rail height.) Loosely install the sleeve on top of the post, but do not yet fasten them to the post. See Diagram C.

Step 3
Installing Post Mount Plates

Any post that does not have a top sleeve will require a post mount plate to be installed. This step is why the screw chase alignment is so crucial. Using 2 - #10 X 3/4" tek screws, screw the post mount plates on top of the remaining posts. See Diagram D.

Diagram C

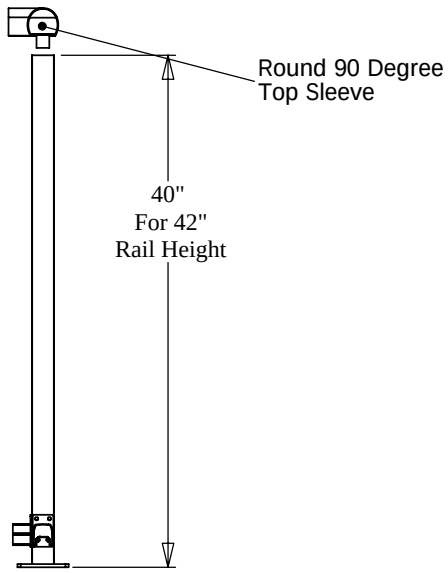

Diagram D

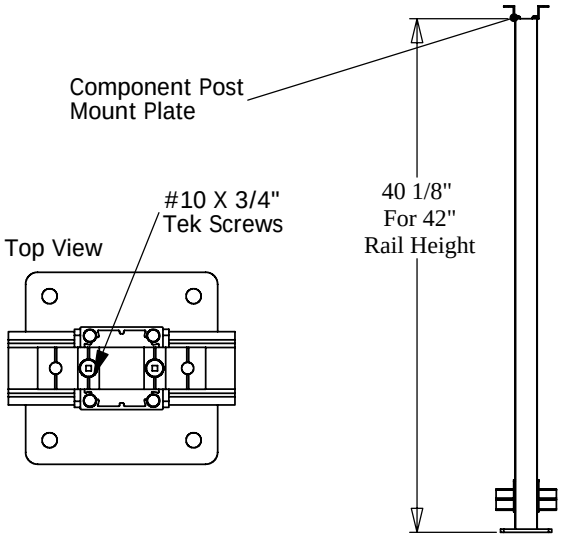

Step 4
Determine Post Locations

Next determine where each post will sit on the deck. Center posts should be evenly spaced. End posts should be no further than 4" from the wall. All posts should be a uniform distance from the deck edge. At this point it is also a good idea to determine your starting location. Usually one side of the deck, anywhere that the bottom rail location is fixed is a good place, such as a wall mount or post at the top of the stairs.

Diagram E

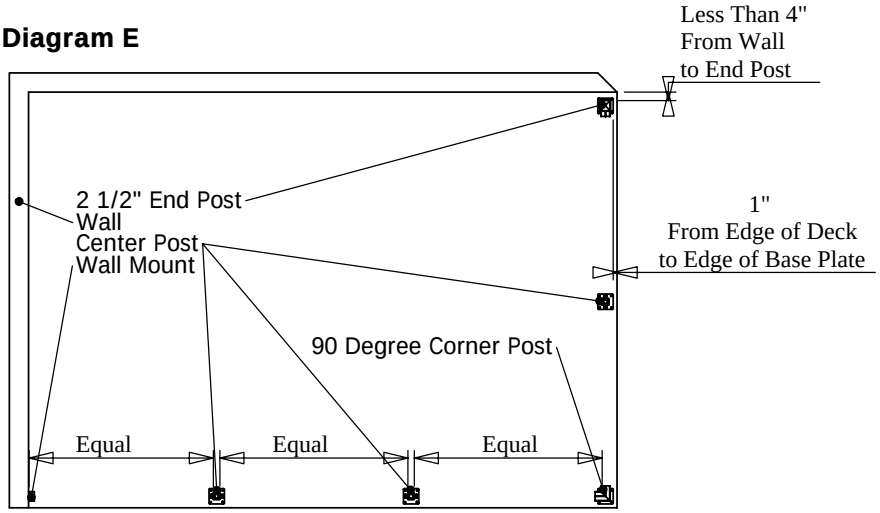

THE MATERIAL CONTAINED HEREIN IS PROPRIETARY TO INNOVATIVE ALUMINUM SYSTEMS INC. AND SHALL NOT BE REPRODUCED, DISCLOSED, OR USED FOR ANY OTHER PURPOSE WITHOUT THE WRITTEN CONSENT OF INNOVATIVE ALUMINUM INC.

INNOVATIVE ALUMINUM SYSTEMS INC
"Taking your railing concepts to completion"

Innovative Aluminum Systems Inc.
#306 - 26730 56th Ave
Aldergrove, BC V4W 3X5

www.innovativealuminum.com

Phone: 604-626-4373
Fax: 604-626-4372
Toll Free: 1-877-724-5427

E-mail: info@innovativealuminum.com

Step 5
Cutting Bottom Rail and Installing Bottom Rail Insert

At this time you should cut your bottom rail and bottom glass insert to length and install the insert into the bottom rail. If you are using bottom sleeves or bottom wall mounts allow 1/2 an inch on each side for the bottom rail to fit inside. If both ends are fixed in place already, such as between two columns or an affixed post and the wall, you will have to cut your bottom rail even shorter. Deducting about 1 1/2" from the opening size so you can slide your bottom rail into one side and then the other. If you are using rail clips, you must be sure to cut the bottom rail to the exact size of the opening with clean, square cuts. You should cut the bottom glass insert to the same size as your bottom rail, and install the bottom glass insert into your bottom rail. Before screwing the bottom rail in place its also a good idea to place some glass setting block inside the the bottom glass insert, so you dont have to do it later. The setting blocks are what hold the glass up high enough that it doesnt fall out. See Diagram F.

Diagram F

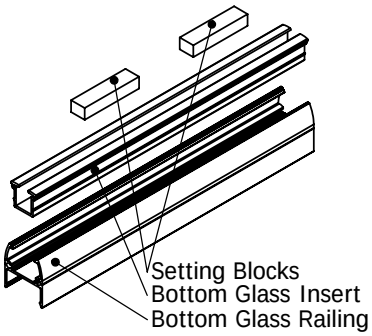

Diagram G

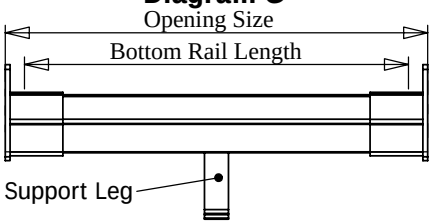

Step 6
Installing Bottom Rail and Support Legs

Now Moving around the deck, snap the support leg into place midway in the bottom rail and insert the bottom rail into one side of the bottom sleeve. Then move your post into position, sliding the attached bottom sleeve onto the other end of the bottom rail. You can at this point fasten the post to the deck (ensuring each one is straight up and down first) and fasten the support leg to the deck. Repeat these steps until you have assembled all the bottom rail pieces.

Diagram H

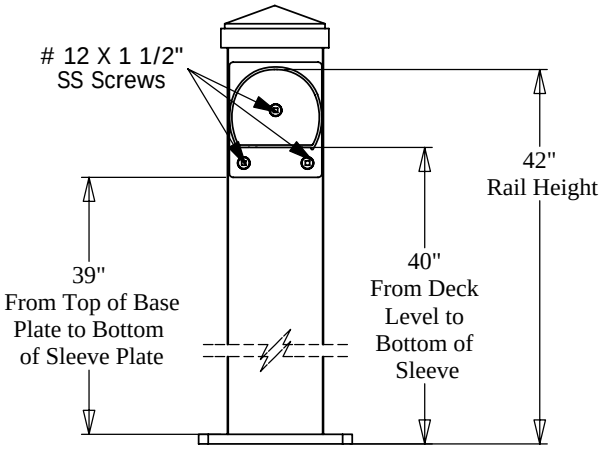

Step 7
Install Top Rail Wall Mounts

At any point where the top rail will attach to a building wall or to a 2 1/2" post you will need to use top rail wall mounts. The position of the top rail wall mounts can be found either by measuring or by sliding them over the toprail and placing the toprail onto the posts. Once you know where you want the top wall mounts installed, fastem them securely, using approved fasteners. See Diagram H for an example of a wall mount on a 2 1/2" Post.

Step 8
Installing Top Rail

Remove any loosely installed top sleeves and working your way around the deck cut and loosely install all top rails. You should allow 1/2" at all sleeves so that the top rail and posts have room to be moved, so they can be set plumb and level. Once you have the top rail in place you can loosely re attach your top sleeves. Before fastening the top rail and sleeves to the posts, check and make sure that the toprail is level and the posts are all plumb. If needed install shims under posts to level out or plumb up the system. Once you are satisfied that the top rail and posts are properly aligned, you can fasten the top rail and the sleeves to the posts, and firmly fasten the posts to the deck surface. Diagram I illustrates fastening the top rail into a wall mount.

Diagram I

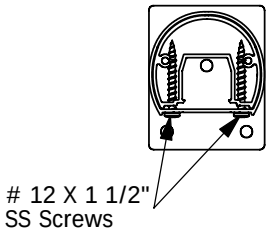

THE MATERIAL CONTAINED HEREIN IS PROPRIETARY TO INNOVATIVE ALUMINUM SYSTEMS INC. AND SHALL NOT BE REPRODUCED, DISCLOSED, OR USED FOR ANY OTHER PURPOSE WITHOUT THE WRITTEN CONSENT OF INNOVATIVE ALUMINUM INC.

Innovative Aluminum Systems Inc.
#306 - 26730 56th Ave
Aldergrove, BC V4W 3X5

Phone: 604-626-4373
Fax: 604-626-4372
Toll Free: 1-877-724-5427

www.innovativealuminum.com

E-mail: info@innovativealuminum.com

"Taking your railing concepts to completion"

Diagram J

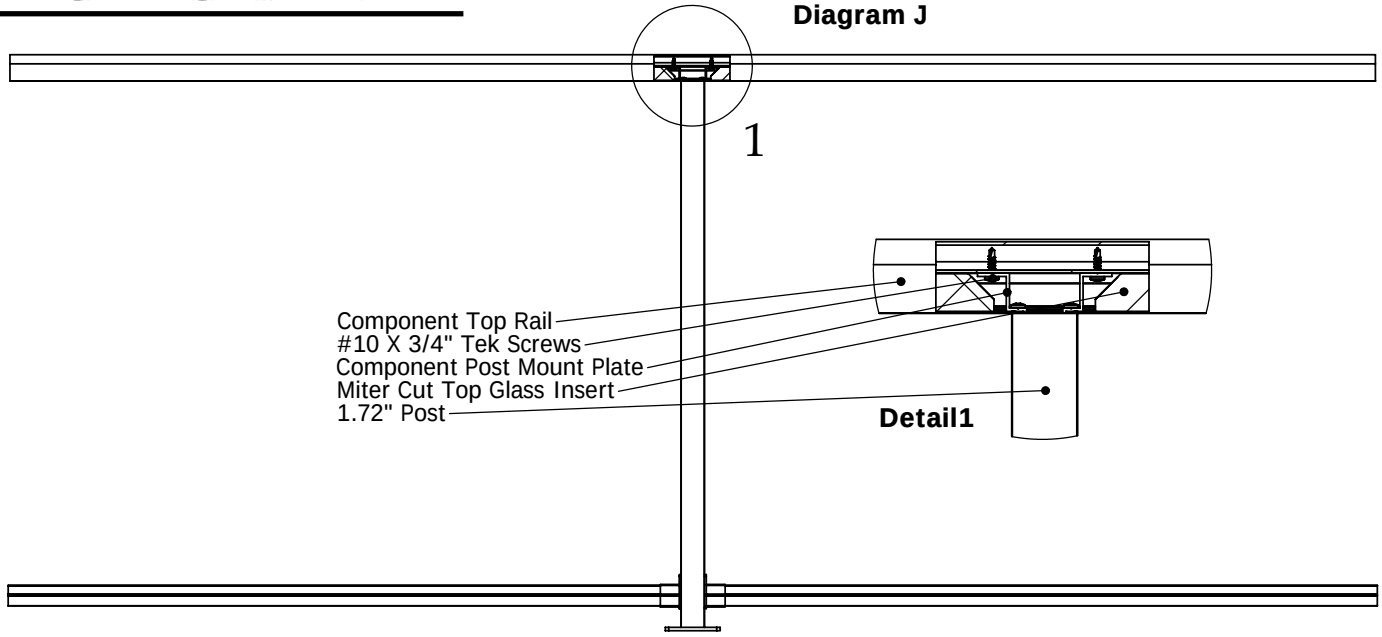

Step 9

Installing Top Glass Inserts

Top glass insert should be cut to length and mitre cut, as shown in Diagram J and Diagram K. Before you snap the glass insert into the top rail, it may be a good idea to check and make sure all your fasteners are in place and your top rail is not loose. Install top rail glass insert.

Diagram K

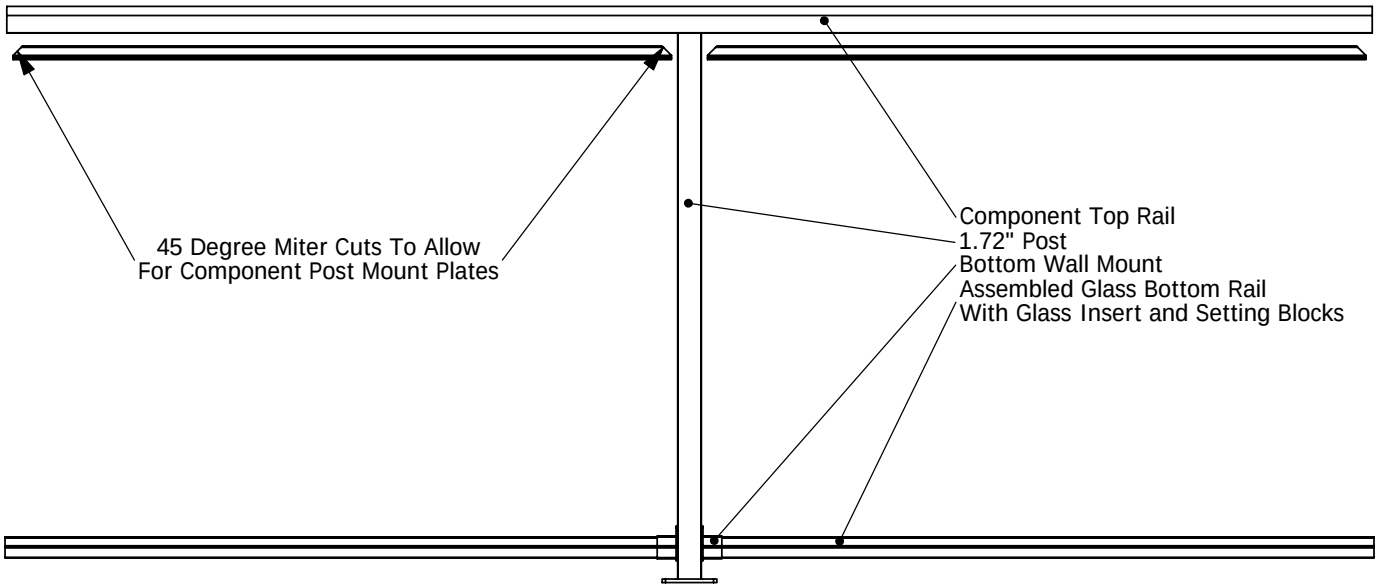

THE MATERIAL CONTAINED HEREIN IS PROPRIETARY TO INNOVATIVE ALUMINUM SYSTEMS INC. AND SHALL NOT BE REPRODUCED, DISCLOSED, OR USED FOR ANY OTHER PURPOSE WITHOUT THE WRITTEN CONSENT OF INNOVATIVE ALUMINUM INC.

INNOVATIVE ALUMINUM SYSTEMS INC
"Taking your railing concepts to completion"

Innovative Aluminum Systems Inc.
#306 - 26730 56th Ave
Aldergrove, BC V4W 3X5

www.innovativealuminum.com

Phone: 604-626-4373
Fax: 604-626-4372
Toll Free: 1-877-724-5427

E-mail: info@innovativealuminum.com

Step 10

Installation of Glass Panels

Center your glass panel in the opening. A typical gap between the glass and the egde of the opening is two to three inches. Ensure your setting block is in place and lined up so that the glass will rest on it after install. Lift the glass panel up, into the top glass insert. Swing the glass over the bottom rail into position then push the glass down into the bottom glass insert. See Diagram L

TIP: If you cant get the glass to go high enough to clear the bottom rail, temporarily loosening off the top rail post mount plates and any top sleeves can allow you to lift the top rail and get that clearance. Just be sure to re tighten them before you are done.

Diagram L

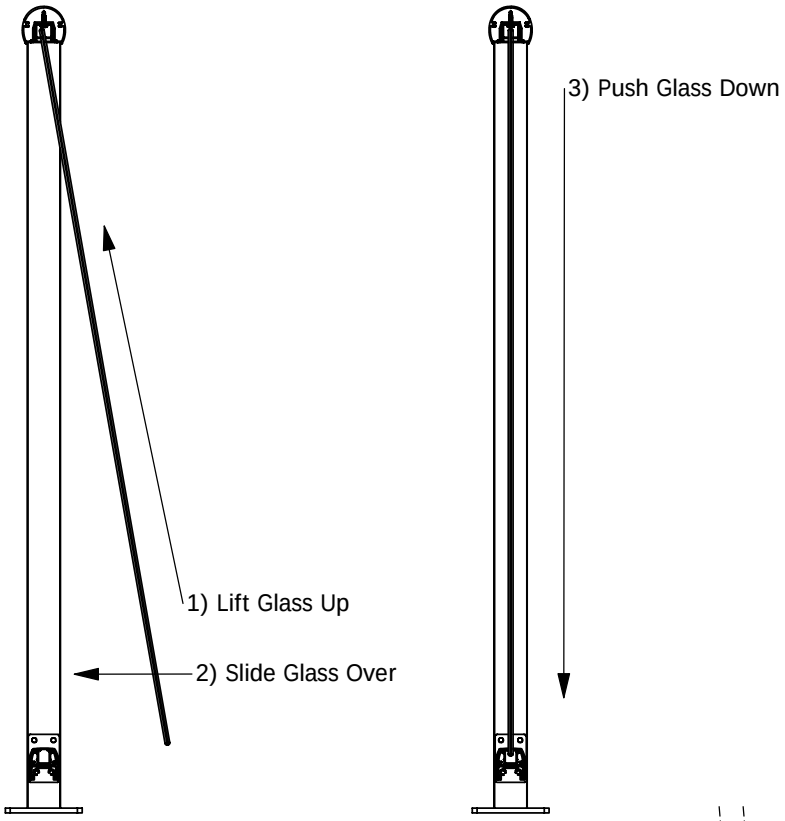

Step 11

Final Inspection

After installing the glass, ensure that all posts are fastened to the deck. Also that all bottom sleeves, top sleeves, and top rails are attached to the posts. That all screws and fasteners are tight and none are missing. Make sure all support legs are in place and screwed to the deck.

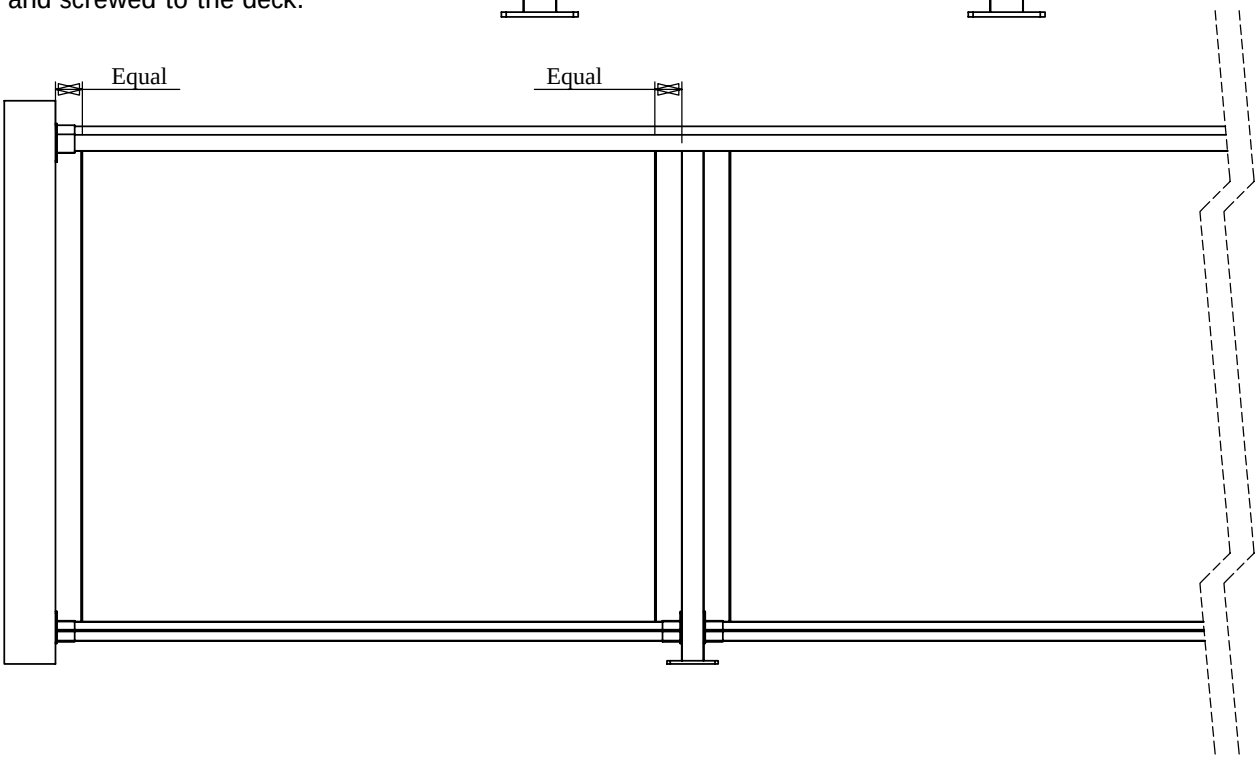

THE MATERIAL CONTAINED HEREIN IS PROPRIETARY TO INNOVATIVE ALUMINUM SYSTEMS INC. AND SHALL NOT BE REPRODUCED, DISCLOSED, OR USED FOR ANY OTHER PURPOSE WITHOUT THE WRITTEN CONSENT OF INNOVATIVE ALUMINUM INC.