Innovative Aluminum Systems Inc.
#306 - 26730 56th Ave
Aldergrove, BC V4W 3X5

Phone: 604-626-4373
Fax: 604-626-4372
Toll Free: 1-877-724-5427

www.innovativealuminum.com

E-mail: info@innovativealuminum.com

"Taking your railing concepts to completion"

Innovative Aluminum Stair Railing Installation Guide

Disclaimer:

This guide is not intended to replace a trained professional installer. The drawings and instructions contained within are for demonstration purposes only. All uses of this product are to conform with local building codes. Proper safety precautions and safe work practices should be followed at all times while installing this product. Innovative Aluminum Systems does not accept any liability for any damages, except as noted in the warranty.

Tools Needed To Install

- Miter saw and carbide-tipped blade
- Power drill
- Tape measure
- Level
- Saftey goggles and hearing protection
- Extension cords
- Drill bits
- #2 and #3 square driver bits
- Pencil
- Angle finder

Important Notes

- Welded picket stair panels are available in sizes ranging from 20 ft and under, at angles ranging from 1 degree to 45 degrees.
- 1.72" X 40 1/8" posts are used for stair applications to allow for the extra height required under the panel and for the angled cut made at the top of the post.
- It is important, when cutting the top of the stair posts, to ensure that the screw chase is properly aligned. See Diagram A
- Fasteners must be appropriate for the application of this system.
- Drain holes in the post should face in the same direction as the railing.
- Any Post that has an outside sleeve on top will have to be trimmed in order to maintain a consistent rail height.

Before installing check your local building codes to ensure you will meet any special code requirements for your area.

Common rail height is 36" or 42". The distance between posts will vary depending on the job site.

Diagram B

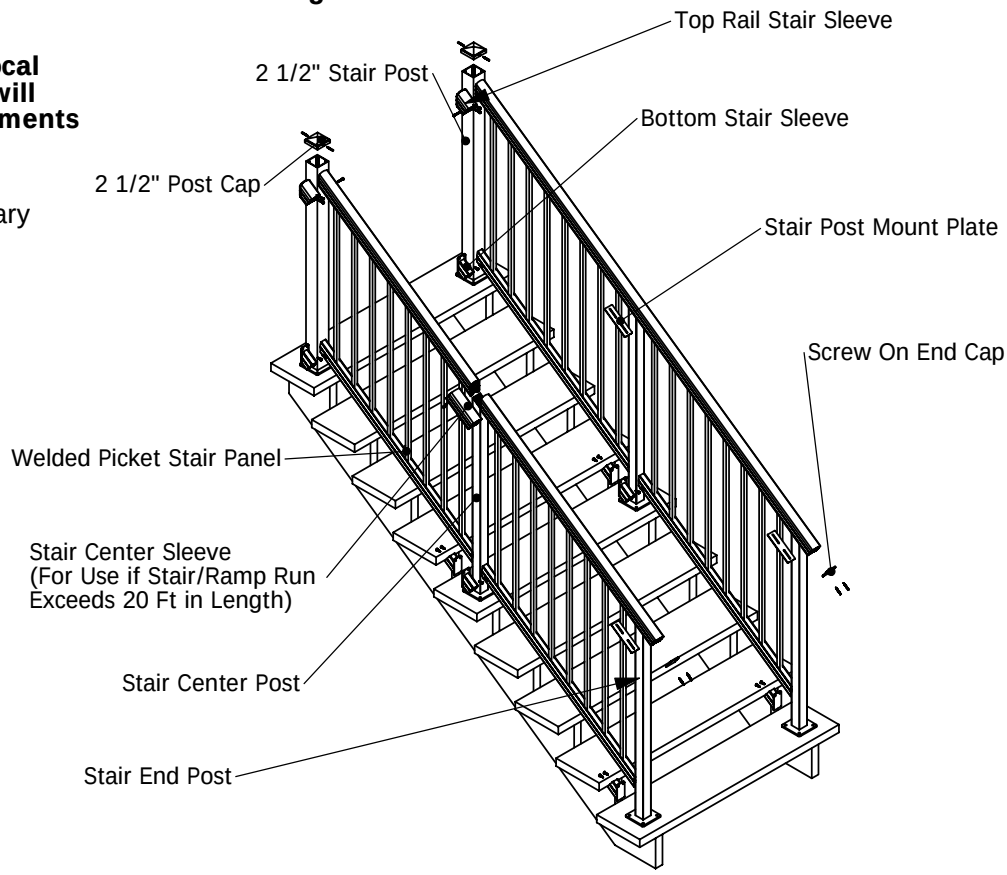

Diagram A
Section View of Screw chase

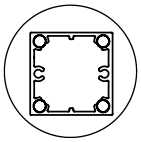

A (1 : 4)

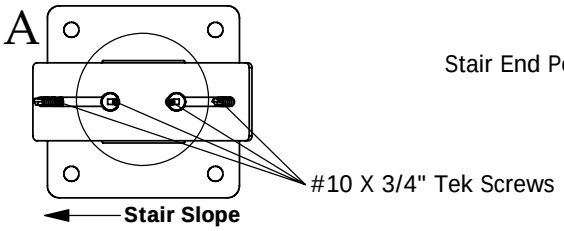

THE MATERIAL CONTAINED HEREIN IS PROPRIETARY TO INNOVATIVE ALUMINUM SYSTEMS INC. AND SHALL NOT BE REPRODUCED, DISCLOSED, OR USED FOR ANY OTHER PURPOSE WITHOUT THE WRITTEN CONSENT OF INNOVATIVE ALUMINUM INC.

Innovative Aluminum Systems Inc.
#306 - 26730 56th Ave
Aldergrove, BC V4W 3X5

Phone: 604-626-4373
Fax: 604-626-4372
Toll Free: 1-877-724-5427

www.innovativealuminum.com

E-mail: info@innovativealuminum.com

"Taking your railing concepts to completion"

Step 1

Lining up welded stair picket panel

Position the top 2 1/2" stair post and the bottom 1.72" end post. Line up the welded stair picket section beside the posts, you want to line up the starting and ending picket gaps so that they are Equal. You want enough of a gap to allow for sleeves to fit onto the railing, but you dont want the gap to exceed four inches.

Next position the railing vertially, so that the top rail is between 34" and 38" from the nose of the stair. You want to ensure that the bottom rail is close enough to the nose of the stair that a 6" ball cannot pass through the railing as demonstrated in Diagram C.

Diagram C

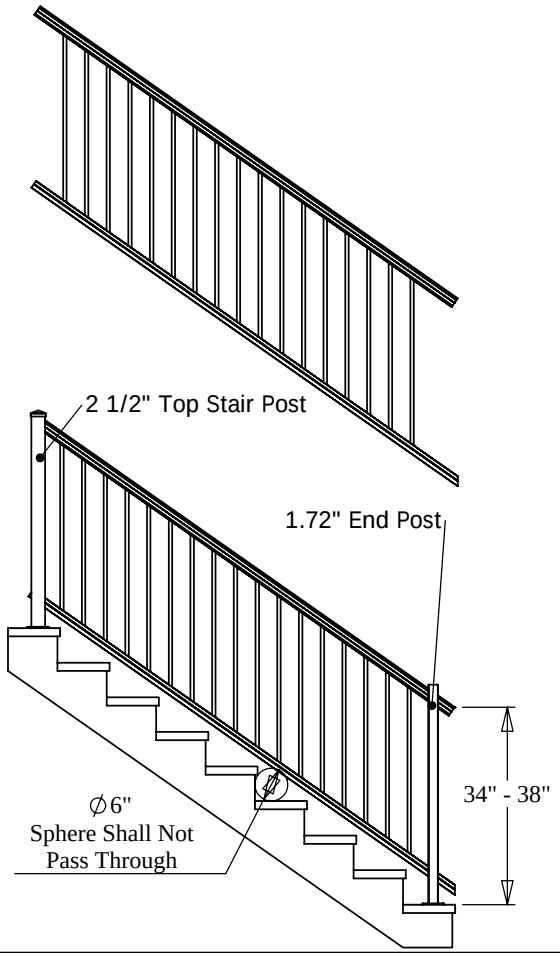

Step 2

Determining Stair Center Post Locations.

While the picket panel is in place, figure out where you want to put your stair center posts. Center posts should replace an exsisting picket and be spaced no further than six feet on center. You will also want to ensure that the baseplate of the center post is far enough back from the nose of the stair to ensure there is no damage to the stair when installing fasteners. This is especially true when fastening into concrete.

Remember to ensure that the screw chase is correctly alligned when you are setting up your center posts. If it is not, you will not be able to install the post mount plates.

Once you are happy with the positioning, mark the top and bottom rails of the welded picket panel, allowing a minimum of 3/8" where top and bottom sleeves are going to be installed.

Next Mark the top of the posts with the height and angle to be cut into them.

Diagram D

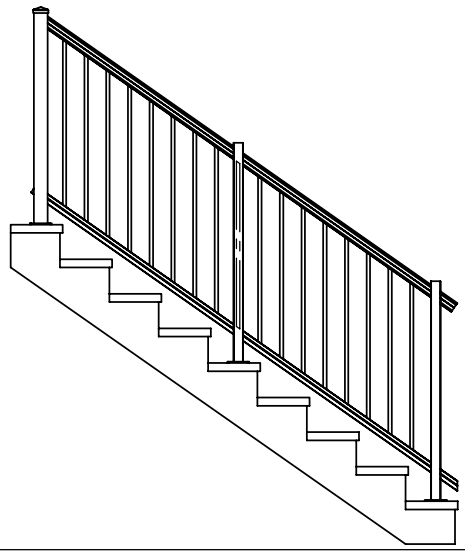

THE MATERIAL CONTAINED HEREIN IS PROPRIETARY TO INNOVATIVE ALUMINUM SYSTEMS INC. AND SHALL NOT BE REPRODUCED, DISCLOSED, OR USED FOR ANY OTHER PURPOSE WITHOUT THE WRITTEN CONSENT OF INNOVATIVE ALUMINUM INC.

Innovative Aluminum Systems Inc.
#306 - 26730 56th Ave
Aldergrove, BC V4W 3X5

Phone: 604-626-4373
Fax: 604-626-4372
Toll Free: 1-877-724-5427

www.innovativealuminum.com

E-mail: info@innovativealuminum.com

"Taking your railing concepts to completion"

Step 3

Cutting the welded picket panel and stair posts

After marking all the cuts, take down the welded picket panel and posts. Cut the top and bottom rails of the welded picket panel at the marked locations and break out the pickets of any line posts. (See Diagram E). Cut the top of all the center and end posts. (Note the screw chase alignment).

Diagram E

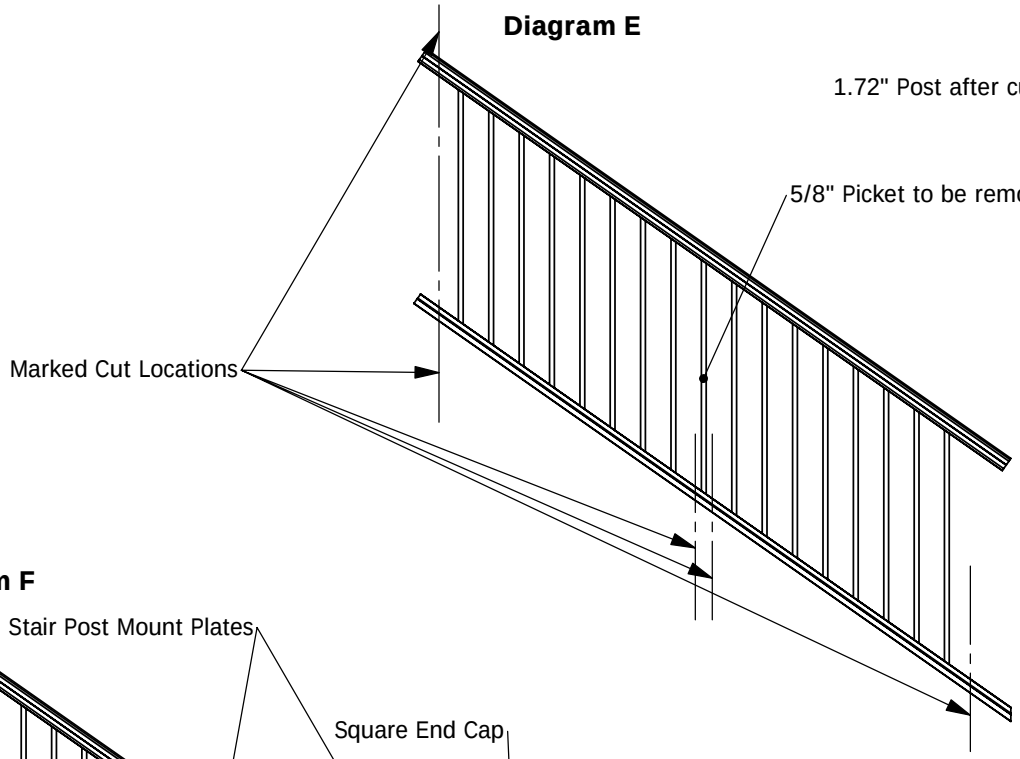

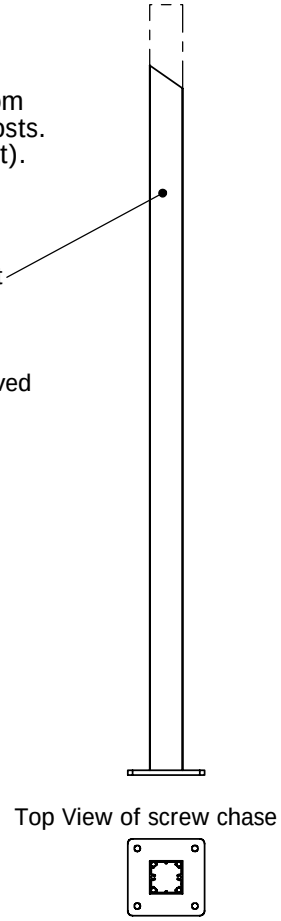

Diagram F

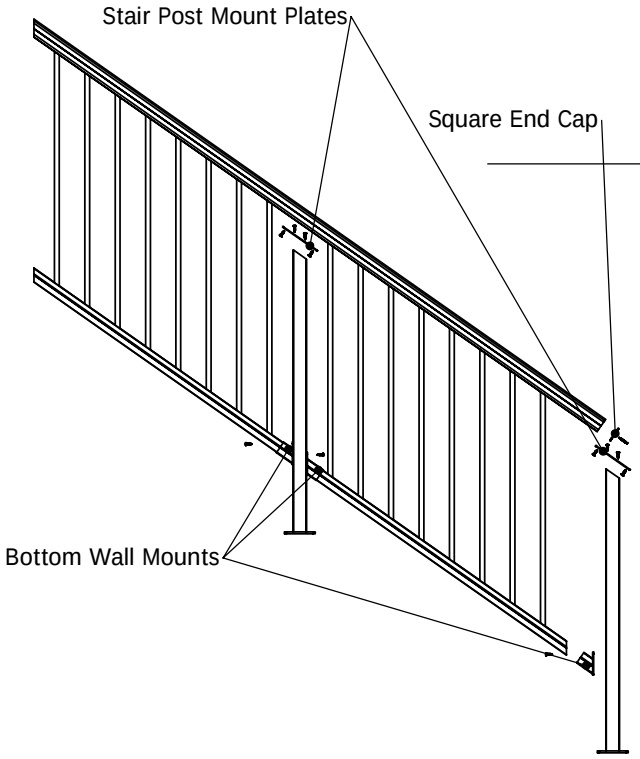

Step 4

Assembling the Welded Picket Panels

Fasten the stair post mount plates to the center and end posts. This step is why it is so crucial to have a proper screw chase alignment. Slide the bottom stair wall mounts onto the welded picket bottom rail, but dont attach them yet. Screw the stair post mount plates to the top rail of the welded picket section. Next attach the bottom wall mounts to both the posts and the bottom rail. At any point in this process you may attach the screw on top rail end cap to the stair panel.

THE MATERIAL CONTAINED HEREIN IS PROPRIETARY TO INNOVATIVE ALUMINUM SYSTEMS INC. AND SHALL NOT BE REPRODUCED, DISCLOSED, OR USED FOR ANY OTHER PURPOSE WITHOUT THE WRITTEN CONSENT OF INNOVATIVE ALUMINUM INC.

INNOVATIVE ALUMINUM SYSTEMS INC
"Taking your railing concepts to completion"

Innovative Aluminum Systems Inc.
#306 - 26730 56th Ave
Aldergrove, BC V4W 3X5

www.innovativealuminum.com

Phone: 604-626-4373
Fax: 604-626-4372
Toll Free: 1-877-724-5427

E-mail: info@innovativealuminum.com

Step 5

Installing stair top wall mounts

Slide top and bottom wall mounts onto welded picket panel. Position top 2 1/2" post and welded picket panel on the stairs. Mark locations of top and bottom wall mounts on the 2 1/2" post. Remove either the panel or the 2 1/2" post, depending on which is more convenient. Attach the wall mounts to the 2 1/2" post as indicated. Attach welded picket stair panel to wall mounts. Note that the top wall mounts attach to the 2 1/2" post so that the fasteners are not visible when the welded picket panel is in place.

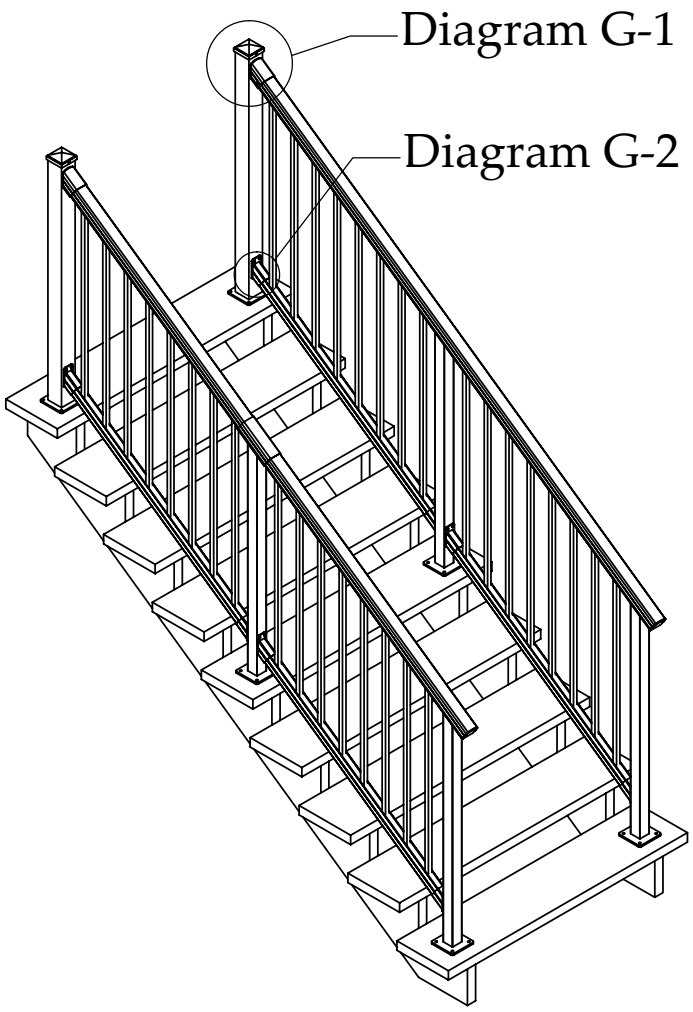

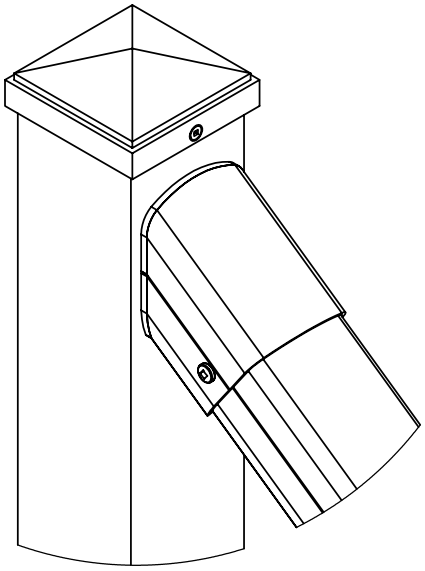

Diagram G-1
(1 : 3)

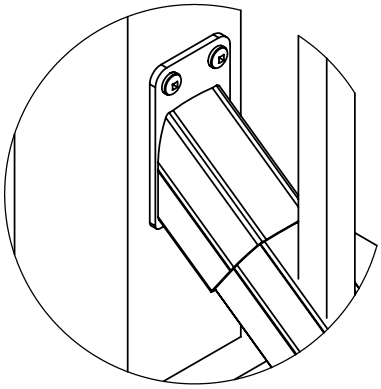

Diagram G-2 (1 : 3)

Step 6

Fastening posts to stairs

Finally, screw all the posts to the stair treads using approved fasteners.

THE MATERIAL CONTAINED HEREIN IS PROPRIETARY TO INNOVATIVE ALUMINUM SYSTEMS INC. AND SHALL NOT BE REPRODUCED, DISCLOSED, OR USED FOR ANY OTHER PURPOSE WITHOUT THE WRITTEN CONSENT OF INNOVATIVE ALUMINUM INC.