बी ई एम एल

bemil

NEW FRONTIERS. NEW DREAMS

BH100 REAR DUMPER

WITH QST30-C ENGINE

PARTS CATALOGUE

953PAR2300

PARTS CATALOGUE

BH100 REAR DUMPER

BEML LIMITED
INDIA

FOREWORD

Due to continuous research and development, some procedures, specifications and parts may be changed. Periodic revision may be made to this publication and mailed automatically to all beml offices.

It is recommended the customers contact BEML offices for information on the latest revision.

The satisfactory ordering and receiving of parts are dependent largely upon the proper use of available information. To avoid errors in ordering, the following procedures should be followed.

1. Give the part number, catalogue REN number and quantity of parts needed.

2. Give the model number, (Refer chassis serial number plate located on the L.H. side of the chassis)

3. Give the desired destination and method of shipment along with any special invoicing instruction.

4. For full understanding, the part book is written as follows:

Description : ‘ * ’ is put in front of the name of an assembly component and the item is entered next to the assembly. If a part mark with ‘ * ’ is an assembly, its component is marked with ‘ ** ’

Non serviced parts : Part Numbers within [ ] and left blank are not serviced as individual component.

Qty : “ Qty ” indicates the quantity of a part required per machine. In case of a component part of an assembly, it indicates the quantity of the parts required per assembly.

Note : For QST 30-C Engine, Radiator & its installation and Air Cleaner & its installation details refer engine parts catalogue.

CONTENTS

SL NO.	DESCRIPTION	FIG. NO.
I.	**ENGINE RELATED PARTS**	
1.	ENGINE OUTPUT SHAFT ASSEMBLY	01
2.	BRAKE OIL COOLER ASSEMBLY	02
3.	BOC SUPPORT SYSTEM	03
4.	RADIATOR MOUNTING PARTS	04
5.	FUEL TANK & PIPING (1/2)	05
6.	FUEL TANK ADDITIONAL MOUNTING (2/2)	06
7.	WIGGINS FAST FILLING FUEL SYSTEM	07
8.	EXHAUST SYSTEM INSTALLATION	08
II.	**ELECTRICAL SYSTEMS**	
9.	INSTRUMENT PANEL SYSTEM (1/2) & (2/2)	11
10.	BATTERY BOX INSTALLATION	12
11.	LIGHTING SYSTEM & BACKUP ALARM (1/2) & (2/2)	13
12.	UNIFIED ELECTRONIC CONTROLLER (1/3), (2/3) & (3/3)	14
13.	AUTO EMERGENCY STEERING (1/2) & (2/2)	15
14.	ELECTRICAL SYSTEM	16
15.	WIRE HARNESS, CABLE ASSY. & CIRCUIT BREAKERS (1/2) & (2/2)	17
16.	ANTI-COLLISION WARNING SYSTEM INSTALLATION	18
17.	FRONT & REAR CAMERA INSTALLATION	19
18.	ABS / ASR SYSTEM INSTALLATION (1/2) & (2/2)	20
III.	**POWER TRAIN, DRIVE SHAFT, DIFFRENTIAL & WHEELS**	
19	ENGINE / TRANSMISSION ASSEMBLY	26
20.	FRONT PROPELLER SHAFT ASSEMBLY	27
21.	FRONT PROPELLER SHAFT GUARD INSTALLATION	28
22.	REAR PROPELLER SHAFT ASSEMBLY	29
23.	REAR PROPELLER SHAFT GUARD INSTALLATION	30

CONTENTS

SL NO.	DESCRIPTION	FIG. NO.
24.	TRANSMISSION MOUNTING	31
25	TORQUE CONVERTER CASE (1/2)	32
26.	TORQUE CONVERTER CASE (2/2)	33
27.	TORQUE CONVERTER	34
28	TORQUE CONVERTER VALVE (1/2)	35
29.	TORQUE CONVERTER VALVE (2/2)	36
30.	TORQUE CONVERTER LUBRICATING VALVE	37
31.	TRANSMISSION CASE	38
32.	TRANSMISSION OIL PAN AND FILLER	39
33.	LUBRICATING VALVE AND PIPING	40
34.	HIGH CLUTCH	41
35.	LOW CLUTCH	42
36.	4TH CLUTCH	43
37.	3RD AND REVERSE CLUTCH	44
38.	2ND AND IST CLUTCH	45
39.	OUTPUT SHAFT	46
40.	TRANSMISSION CONTROL VALVE (1/4)	47
41.	TRANSMISSION CONTROL VALVE (2/4)	48
42.	TRANSMISSION CONTROL VALVE (3/4)	49
43.	TRANSMISSION CONTROL VALVE (4/4)	50
44.	T/C & T/M CONTROL VALVE COVER ASSY.	51
45.	T/M ADDITIONAL FILTER & COVER ASSY.	52
46.	TRANSMISSION ADDITIONAL FILTER	53
47.	HYD.PUMP (TRANSMISSION)	54
48.	OIL FILTER	55
49.	TRANSMISSION FILTER PIPING (1/2)	56

CONTENTS

SL NO.	DESCRIPTION	FIG. NO.
50.	TRANSMISSION FILTER PIPING (2/2)	57
51.	TRANSMISSION COOLING PIPING (1/2)	58
52.	TRANSMISSION COOLING PIPING (2/2)	59
53.	TRANSMISSION COOLING PIPING (1/2)&(2/2) (PALL FILTER)	60
54.	FRONT AXLE	66
55.	BRAKE HEAD ASSEMBLY	67
56.	REAR AXLE ASSEMBLY	68
57.	AXLE BEAM ASSEMBLY	69
58.	DIFFERENTIAL ASSEMBLY	70
59.	REAR BRAKE ASSY	71
60.	FINAL DRIVE ASSY	72
61.	REAR AXLE SUPPORT	73
62.	PARKING BRAKE MOUNTING	74
63.	PARKING BRAKE	75
64.	FRONT WHEEL	76
65.	REAR WHEEL	77
66.	WHEEL STOPPER INSTALLATION	78
IV.	**AIR SYSTEM**	
67.	AIR PIPING (1/2)	85
68.	AIR PIPING (2/2)	86
69.	AIR PIPING	87
70.	AIR PIPING (1/2)	88
71.	AIR PIPING (JOINT ASSY REF.) (2/2)	89
72.	AIR PIPING (JOINT ASSY. REF) (1/2)	90
73.	AIR PIPING (JOINT ASSY REF) (2/2)	91
74.	AIR PIPING	92

CONTENTS

SL NO.	DESCRIPTION	FIG. NO.
75.	AIR PIPING	93
76.	AIR PIPING (FLANGE ASSY.REF)	94
77.	AIR PIPING	95
78.	AIR PIPING	96
79.	AIR PIPING	97
80.	AIR PIPING	98
81.	SHUT OFF COCK INSTALLATION	99
82.	BRAKE OIL PIPING FRONT (1/2)	100
83.	BRAKE OIL PIPING FRONT (2/2)	101
84.	BRAKE OIL PIPING (REAR)	102
85.	AIR PIPING CIRCUIT DIAGRAM	103
86.	DUAL BRAKE VALVE	104
87.	RETARDER VALVE	105
88.	GRADUATED HAND CONTROL VALVE	106
89.	HAND CONTROL VALVE	107
90.	FRONT BRAKE CHAMBER	108
91.	REAR BRAKE CHAMBER	109
92.	SLACK ADJUSTER	110
93.	DOUBLE CHECK VALVE	111
94.	LIMITING AND QUICK RELEASE VALVE	112
95.	SHUT OFF COCK	113
96.	RE 6 RELAY EMERGRNCY VALVE	114
97.	INVERSION VALVE	115
98.	D2 GOVERNER VALVE	116
99.	AIR DRYER	117
100.	ABS / ASR SYSTEM CIRCUIT DIAGRAM	118

CONTENTS

SL NO.	DESCRIPTION	FIG. NO.
V.	**STEERING & CINTROL SYSTEM**	
101.	STEERING COLUMN,WHEEL,DRIVE ASSY. & BRACKET INST.	125
102.	STEERING LINKAGE INSTALLATION	126
103.	STEERING LOCK SYSTEM	127
104.	STEERING CONTROL UNIT	128
VI.	**FRAME AND GUARDS**	
105.	MAIN FRAME	134
106.	FRONT SUSPENSION ASSEMBLY	135
107.	REAR SUSPENSION ASSEMBLY	136
108.	FENDER SUPPORTS, GRILL ASSY.	137
109.	CABIN & FLOOR INSTALLATION	138
110.	ROPS CABIN ASSEMBLY	139
111.	SEAT INSTALLATION	140
112.	CENTER DECK STRUCTURE	141
113.	ENGINE GUARD INSTALLATION	142
114.	TRANSMISSION GUARD INSTALLATION	143
115.	MUD GUARD INSTALLATION (1/2) & (2/2)	144
116.	HEAT GUARD INSTALLATION	145
117.	FUEL TANK LADDER INSTALLATION	146
118.	REAR VIEW MIRROR INSTALLATION	147
VII.	**HYDRAULIC SYSTEM**	
119.	HYDRAULIC TANK ASSEMBLY (SPLIT TYPE)	153
120.	HOIST VALVE ASSEMBLY	154
121.	HOIST VALVE ASSEMBLY	155
122.	HOIST CYLINDER ASSEMBLY	156
123.	HIGH PRESSURE FILTER ASSY.	157

CONTENTS

SL NO.	DESCRIPTION	FIG. NO.
124.	COLUMN ASSEMBLY, STUB	158
125.	DUAL RELIEF VALVE	159
126.	RETURN LINE FILTER ASSY.	160
127.	STEERING CYLINDER ASSY.	161
128.	HYDRAULIC PUMP ASSY. (1/2)	162
129.	HYDRAULIC PUMP ASSY. (2/2)	163
130.	RELIEF VALVE	164
131.	WORK EQUIPMENT CONTROL	165
132.	WORK EQUIPMENT CONTROL ELECTRICAL	166
133.	STEERING SYSTEM PIPING INSTN.(1/3) (2/3) & (3/3)	167
134.	EMERGENCY STEERING SYSTEM PIPING INSTALLATION	168
135.	HOIST CYLINDER INSTALLATION	169
136.	HYD. PUMP ASSY. (BRAKE OIL COOLER)	170
137.	HOIST PIPING SYSTEM INSTN.(1/3) (2/3) & (3/3)	171
138.	BRAKE OIL COOLER PIPING INSTN.(1/4),(2/4),(3/4) & (4/4)	172
139.	OIL COOLER (STEERING & HOIST) INSTALLATION	173
VIII.	**BODY**	
140.	BODY INSTALLATION	180
141.	BODY POSITIVE LOCKING	181
142.	BODY DOWN POSITION INDICATOR MECH (OPT)	182
IX.	**FIRE PROTECTION SYSTEM**	
143.	FIRE PROTECTION SYSTEM	185
144.	FIRE EXTINGUSHER INST. (PORTABLE CYLINDER 5kg)	186
X.	**CENTRALISED LUBRICATION SYSTEM**	
145.	ELECTRICAL ACCESSRIES	190
146.	PUMP STATION ASSY.	191
147.	FRONT INJECTION LINE RH	192

CONTENTS

SL NO.	DESCRIPTION	FIG. NO.
148.	FRONT INJECTION LINE LH	193
149.	RH HOSE ASSY. ROUTING	194
150.	FRONT INJECTION LINE LH	195
151.	LH HOSE ASSY. ROUTING	196
152.	REAR INJECTION LINE (1/2)	197
153.	REAR INJECTION LINE (2/2)	198
154.	REAR HOSE ASSY. ROUTING	199
155.	HOSE ASSY. ROUTING	200
156.	INJECTOR	201
157.	HOSE ASSY. ROUTING FROM TANK	202
158.	AIR PRESSURE REGULATOR	203
XI.	**AIR CONDITIONER / HEATER INST. & ASSY.**	
159.	AIR CONDITIONER / HEATER INSTALLATION	206
XII.	**DECAL INSTALLATION & TOOLS**	
160.	DECAL INSTALLATION (1/2) & (2/2)	207
161.	RETRO REFLECTORS	208
162.	TOOLS	209
XIII.	**KIT**	
163.	SERVICE KIT	215
XIV.	**NUMERICAL INDEX**	
164.	NUMERICAL INDEX	

I
ENGINE RELATED PARTS

FIG. 01 OUT PUT SHAFT ASSY.

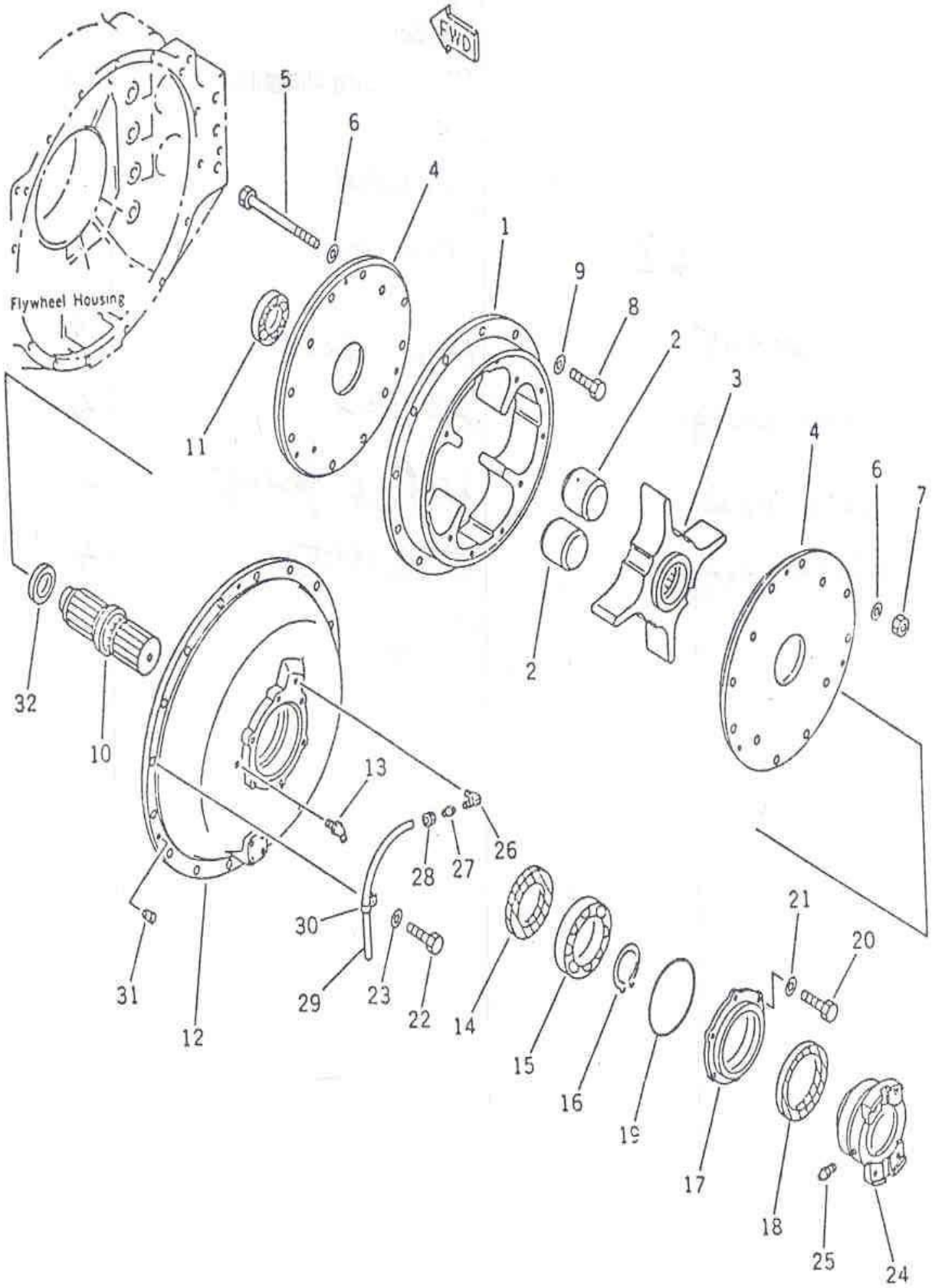

OUT PUT SHAFT ASSY.

FIG NO. 01

SLNO	PART NUMBER	DESCRIPTION	QTY	REMARKS
	953-DA-01004	OUTPUT SHAFT ASSY		
01	985-DA-41056	BODY, OUTER	1	
02	985-DA-61096	RUBBER	8	
03	985-DA-41064	BODY, INNER	1	
04	985-DA-11078	FLANGE	2	
05	CFB08-21440	HEX. BOLT	12	
06	CFW05-14045	WASHER	24	
07	CFN04-11411	HEX. NUT	12	
08	CFB25-21645	HEX. BOLT	6	
09	CFW05-16045	WASHER	6	
10	985-DA-51019	SHAFT OUTPUT	1	
11	985-DA-02038	BEARING	1	
12	985-DA-41031	COVER	1	
13	CLN01-10675	NIPPLE, GREASE	1	
14	985-DA-02046	SEAL OIL	1	
15	CBB00-06219	BEARING	1	
16	CFL01-19530	RING, SNAP	1	
17	985-DA-31044	COVER	1	
18	985-DA-02021	SEAL, OIL	1	
19	CHS01-15170	O-RING	1	
20	CFS01-31230	HEX. SCREW	6	
21	CFW05-12032	WASHER	6	
22	CFB25-11338	HEX. BOLT	16	
23	CFW02-11425	WASHER	16	
24	953-DA-02009	COUPLING ASSY	1	
25	CLN01-00000	NIPPLE, GREASE	1	
26	CPF14-10817	ELBOW	1	
27	CPF40-10813	SLEEVE	1	
28	CFN45-10817	NUT, SLEEVE	1	
29	CHT01-00808	TUBE NYLON	1	
30	CCC06-01214	CLIP	1	
31	CPL09-11215	PLUGE	3	
32	985-DA-11086	SPACER	1	
	985-SK-01639	DAMPER SERVICE KIT		

FIG. 02 BRAKE OIL COOLER

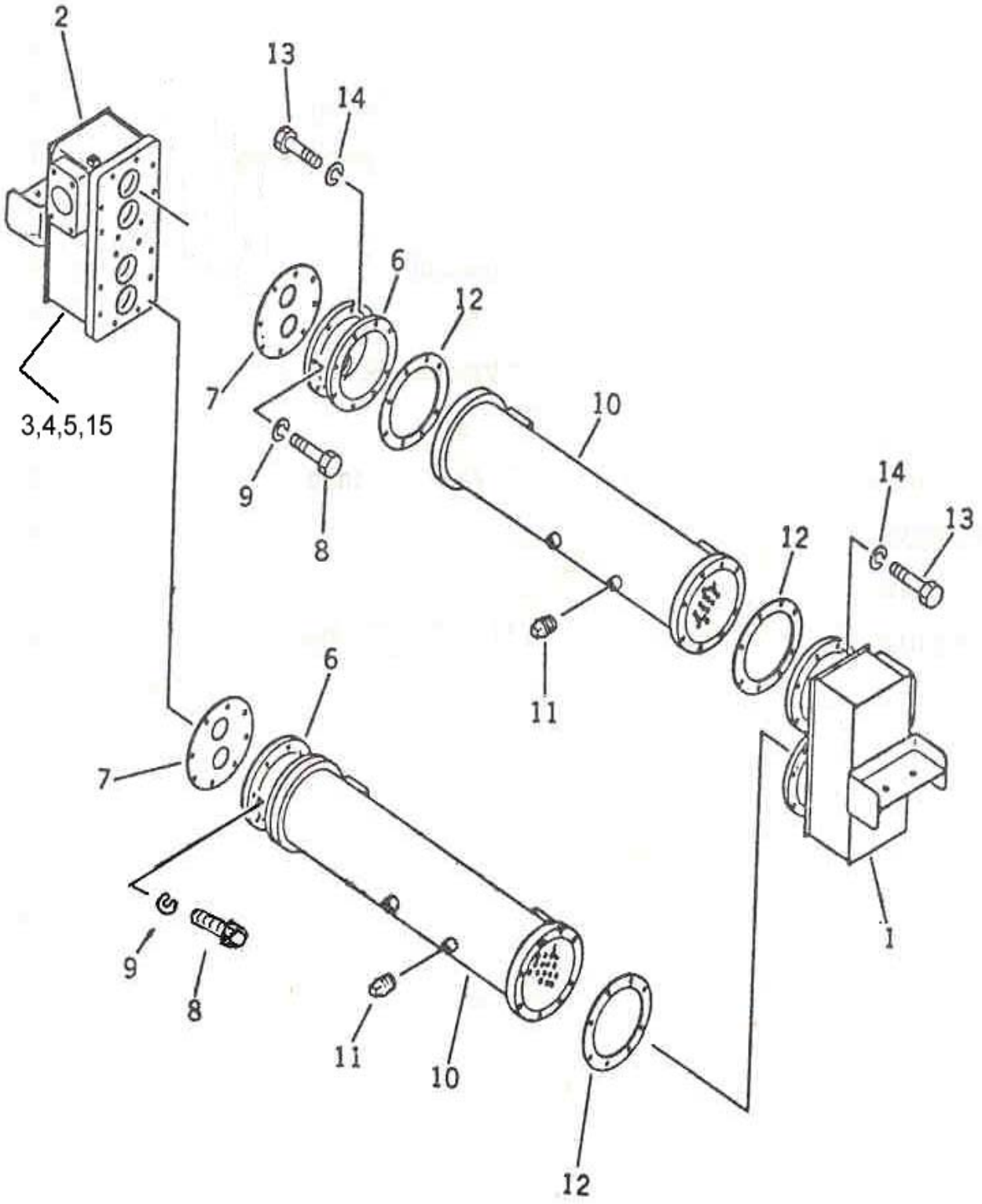

BRAKE OIL COOLER

FIG NO. 02

SLNO	PART NUMBER	DESCRIPTION	QTY	REMARKS
	953-EC-02243	BRAKE OIL COOLER		
01	985-EC-03025	COVER	1	
02	985-EC-03017	COVER	1	
03	953-EC-12158	PLATE	1	
04	985-EC-62067	GASKET	1	
05	CFS01-31230	HEX. SCREW	4	
06	985-EC-41396	COVER	2	
07	985-EC-91868	GASKET	4	
08	CFB01-11035	HEX. BOLT	16	
09	CFW01-11030	SPRING WASHER	16	
10	953-EC-03004	ELEMENT	2	
11	CPL01-10810	PLUG	3	
12	985-EC-91413	GASKET	2	
13	CFB01-11035	HEX. BOLT	32	
14	CFW01-11030	SPRING WASHER	32	
15	CFW01-11236	SPRING WASHER	4	

FIG. 03 BOC SUPPORT SYSTEM

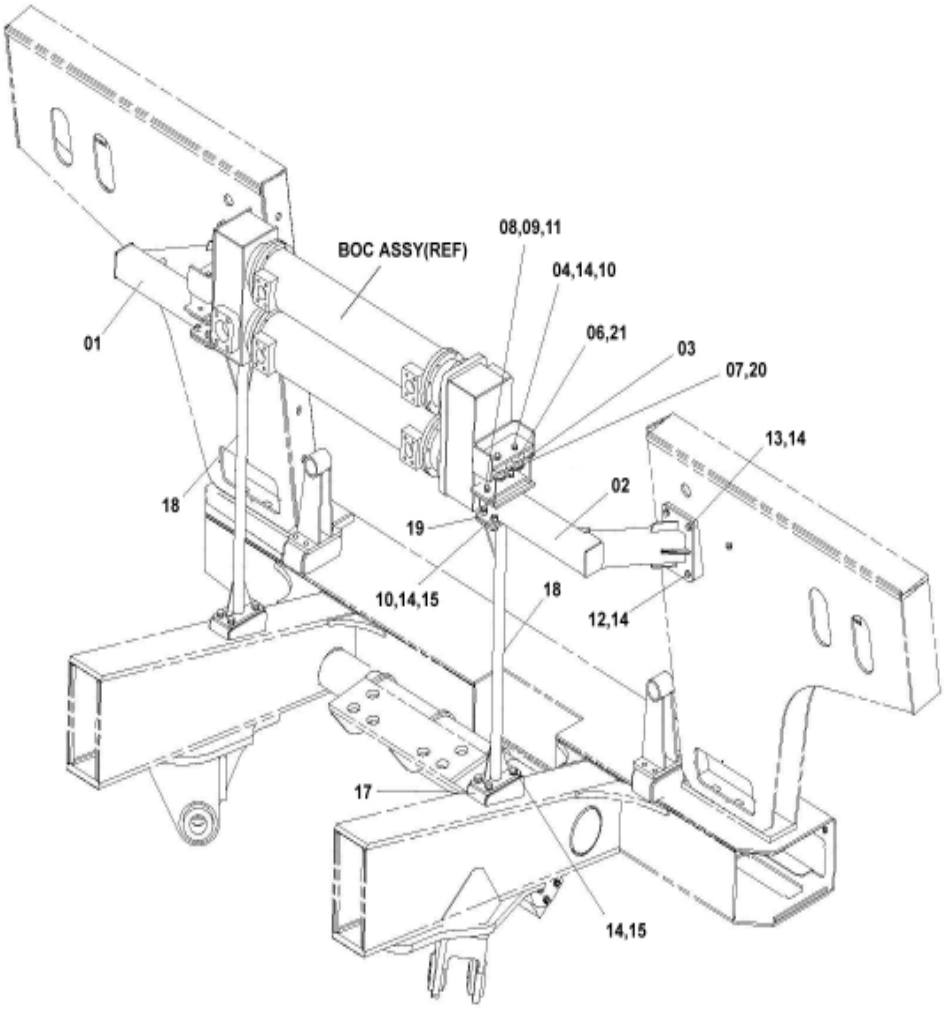

SLNO	PART NUMBER	DESCRIPTION	QTY	REMARKS
	953-EC-02243	BOC ASSY		
01	953-EC-02016	BRACKET STR. LH	1	
02	953-EC-02024	BRACKET STR. RH	1	
03	985-EC-02454	BRACKET	2	
04	CFB01-21690	HEX. BOLT	4	
06	451-HP-61744	CUSHION	4	
07	451-HP-61752	CUSHION	4	
08	CFW05-14045	WASHER	4	
09	CFB07-21445	HEX. BOLT	4	
10	CFN01-11615	HEX. NUT	12	
11	CFN04-11411	HEX. NUT	4	
12	CFB01-21660	HEX. BOLT	4	
13	CFS01-21630	HEX. SCREW	4	
14	CFW01-11648	SPRING WASHER	28	
15	CFS01-31640	HEX. SCREW	16	
17	953-EC-02268	BRACKET STR.	2	
18	953-EC-02276	BRACKET STR.	2	
19	985-EC-12421	PLATE	2	
20	985-EC-11133	WASHER	4	
21	985-EC-11125	COLLAR	4	

FIG. 04 RADIATOR MOUNTING PARTS

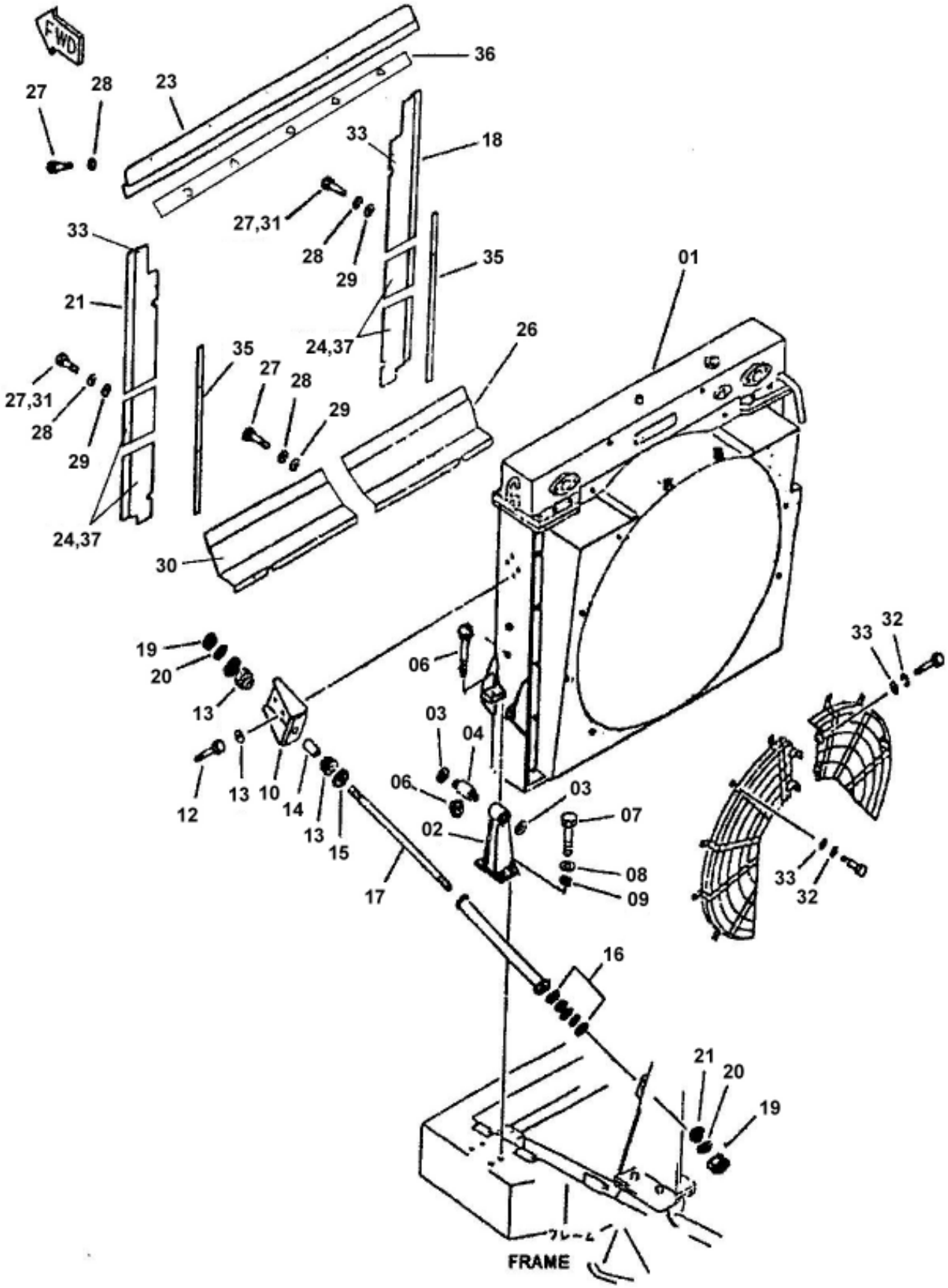

RADIATOR MOUNTING PARTS

FIG NO. 04

SLNO	PART NUMBER	DESCRIPTION	QTY	REMARKS
01	953-RA-01005	RADIATOR ASSY	1	CUIL SUPPLY
02	985-EC-02175	BRACKET	2	
03	985-EC-12049	WASHER	4	
04	985-EC-02297	CUSHION	2	
05	CFB07-11480	HEX. BOLT	4	
06	CFN24-21415	HEX. NUT	4	
07	CFB01-21655	HEX. BOLT	8	
08	CFW02-11630	WASHER	8	
09	CFW01-11648	SPRING WASHER	8	
10	985-EC-02029	BRACKET LH	1	
11	985-EC-02037	BRACKET RH	1	
12	CFB10-21435	HEX. BOLT	8	
13	CFW05-14045	WASHER	8	
14	985-HP-02353	CUSHION	4	
15	985-HP-11247	BUSHING	2	
16	985-EC-11028	PLATE	10	
17	953-RA-01054	SUPPORT STR	2	
18	953-RG-01054	BAFFLE LH SIDE	1	
19	CFN01-21615	HEX. NUT	4	
20	CFW02-21626	WASHER	4	
21	953-RG-01046	BAFFLE RH SIDE	1	
22	CFW01-11648	SPRING WASHER	4	
23	953-RA-01021	BAFFLE, UPPER	1	
24	953-RG-01062	BAFFLE, SIDE	4	
25	CPW15-12025	BOSS	9	
26	953-RG-01038	BAFFLE, BOTTOM LH	2	
27	CFS01-31225	HEX, SCREW	23	
28	CFW01-11236	SPRING WASHER	23	
29	CFW05-12032	WASHER	23	
30	953-RG-01079	BAFFLE, BOTTOM RH	2	
31	CFS01-20820	HEX. SCREW	8	
32	CFS01-21230	HEX. SCREW M12x30	20	CUIL SUPPLY
33	CFW01-11236	SPRING WASHER M12	20	CUIL SUPPLY
34	CFW05-12032	WASHER M12	20	CUIL SUPPLY
35	953-RG-10037	PLATE	2	
36	953-RG-10029	PLATE	1	
37	953-RG-10012	PLATE	4	

FIG. 05 FUEL TANK & PIPING (1/2)

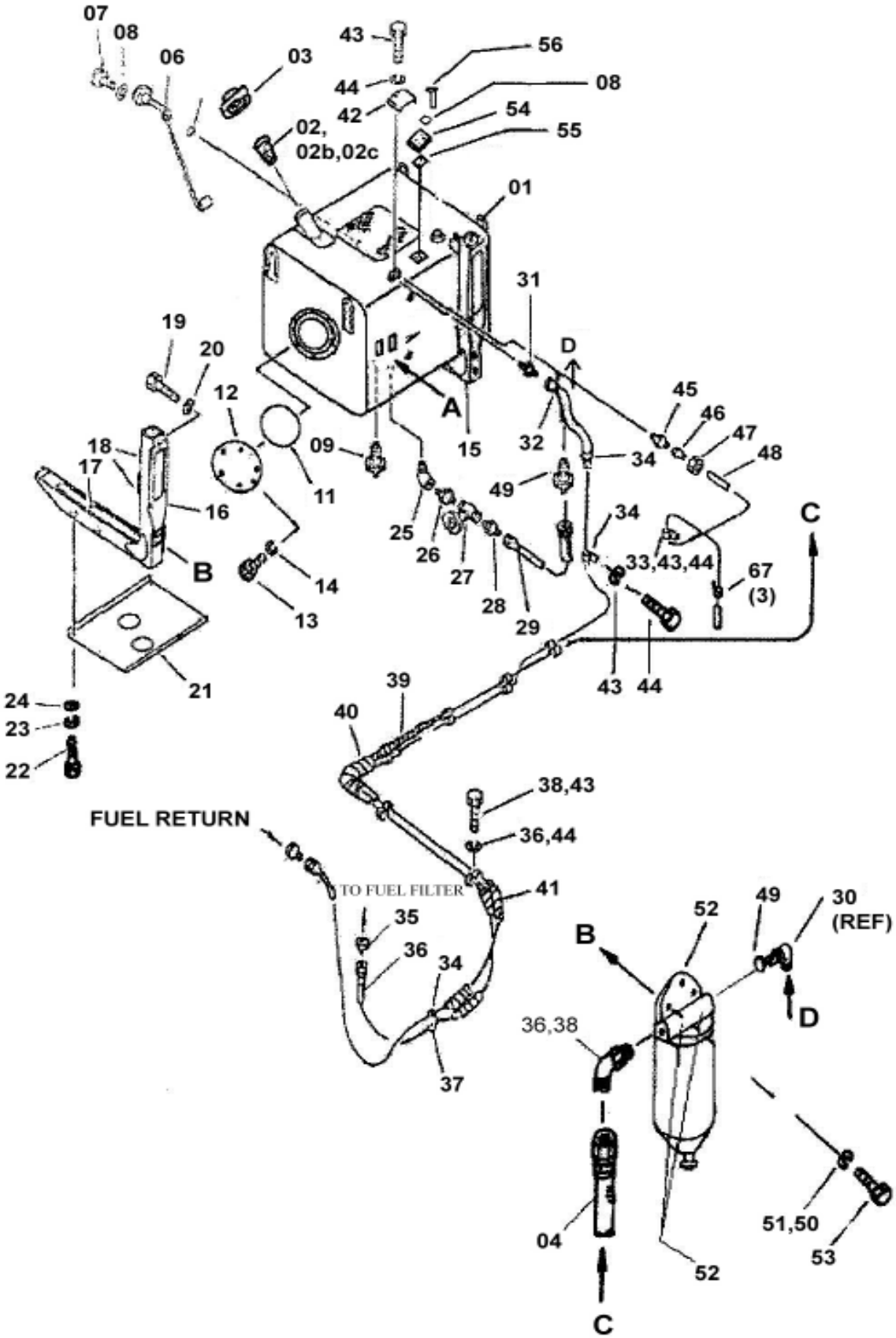

SLNO	PART NUMBER		DESCRIPTION	QTY	REMARKS
	953-FL-00033		FUEL SYSTEM INSTLN.		
01	985-FL-02006		FUEL TANK STR.	1	
02	985-ZZ-10294		STRAINER	1	
02a	CFS02-10510		CHEASE HEAD SCREW	4	
02b	CFW03-10510		WASHER	4	
03	985-ZZ-14255		CAP	1	
04			HOSE ASSY	1	#AK 1619255
05	985-FL-02103		GAUGE UNIT	1	
06	CHS01-13045		O-RING	1	
07	CFS13-20620		SCREW	4	
08	CFW01-10619		SPRING WASHER	4	
09	564300007340		DRAIN COCK	1	
11	TG 0097	*	O-RING	1	
12	985-FL-11402	*	PLATE COVER	1	
13	CFS01-21020	*	HEX. SCREW	6	
14	CFW01-11030	*	SPRING WASHER	6	
15	985-FL-02111		HANGER REAR	1	
16	985-FL-02014		HANGER FRONT	1	
17	985-FL-61046		PAD	2	
18	985-FL-61087		PAD	4	
19	CFS01-31635		HEX. SCREW	16	
20	CFW05-16045		WASHER	16	
21	985-FL-02185		COVER STR.	1	
22	CFS01-31225		HEX. SCREW	6	
23	CFW01-11236		SPRING WASHER	6	
24	CFW05-12032		WASHER	6	
25	CPF37-30400		ELBOW	1	
26	CPF34-10442		NIPPLE	1	
27	985-FL-02193		BALL VALVE	1	
28	CPF36-00628		NIPPLE	1	
29	CHH22-21210		HOSE ASSY	1	
30	985-FL-11565		ADAPTOR	1	FOR SPIN-ON TYPE

FIG. 05 FUEL TANK & PIPING (1/2)

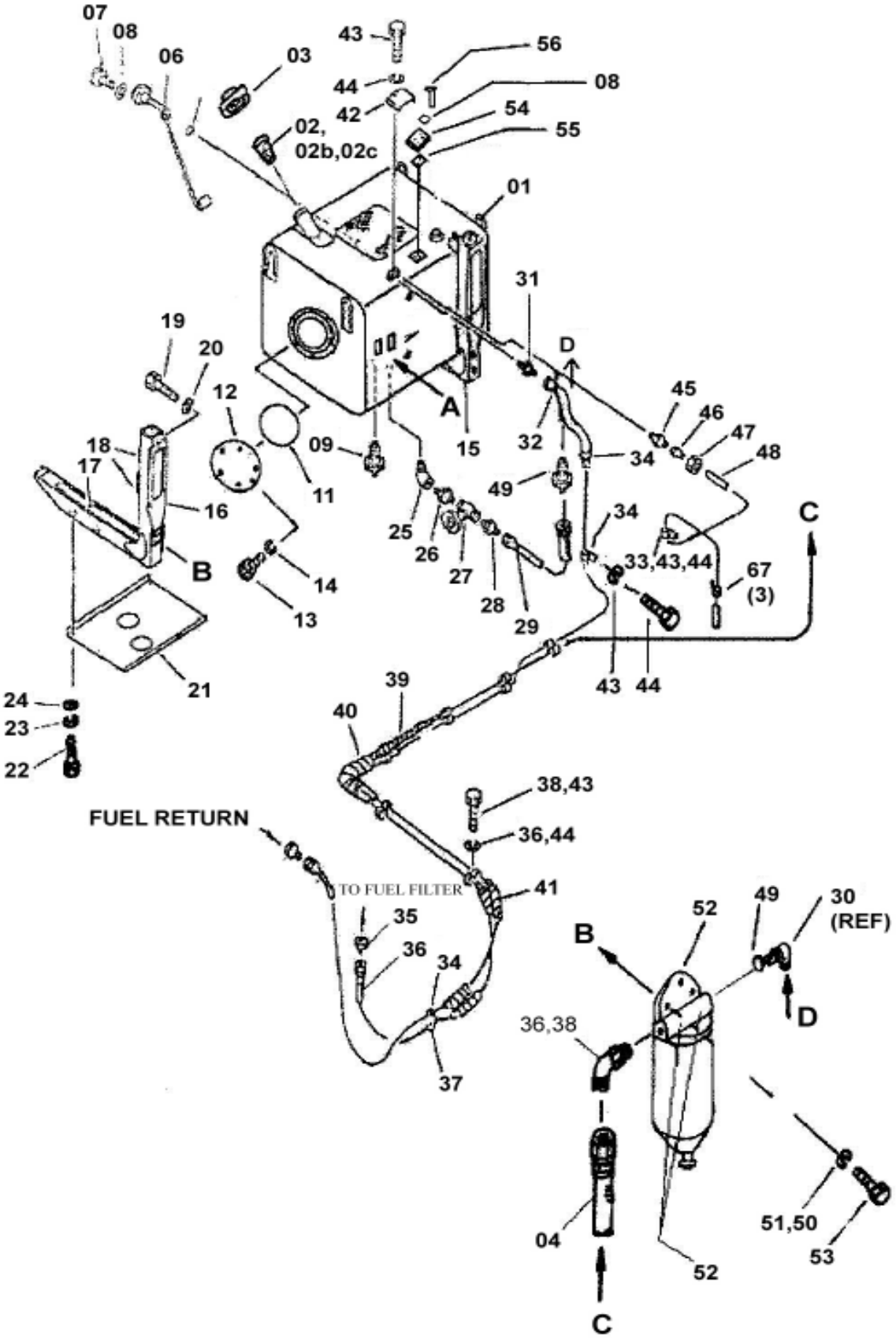

SLNO	PART NUMBER	DESCRIPTION	QTY	REMARKS
31	985-FL-11079	NIPPLE	1	
32	02750-24500	HOSE ASSY	1	
33	CCC06-01214	CLIP	3	
34	CCC05-22110	CLIP	10	
35		ADAPTOR	1	#3234992
36		ADAPTOR	1	#3232992
37	08036-02514	CLIP	8	
38		BOLT	1	#AR129859
39	985-AS-73979	SPRIAL TUBE	1	
40	985-AS-74083	SPRIAL TUBE	2	
41	985-AS-71108	SPRIAL TUBE	2	
42	985-FL-18272	COVER	1	
43	CFS01-21020	HEX. SCREW	14	
44	CFW01-11030	SPRING WASHER	14	
45	CCA05-10817	CONNECTOR	1	
46	CPF40-00813	SLEEVE	1	
47	CFN45-00817	NUT SLEEVE	1	
48	CHT01-00817	O-RING	3	#43696
50	CFW02-11225	WASHER	2	
51	CFW01-11236	SPRING WASHER	2	
52		PRE FILTER	1	#39377835
53	CFB01-21045	HEX. BOLT	3	
54	953-FL-11017	PLATE	1	
55	953-FL-61027	GASKET	1	
56	CFS01-10620	HEX. SCREW	4	

FIG. 06 FUEL TANK ADDITIONAL MOUNTING (2/2)

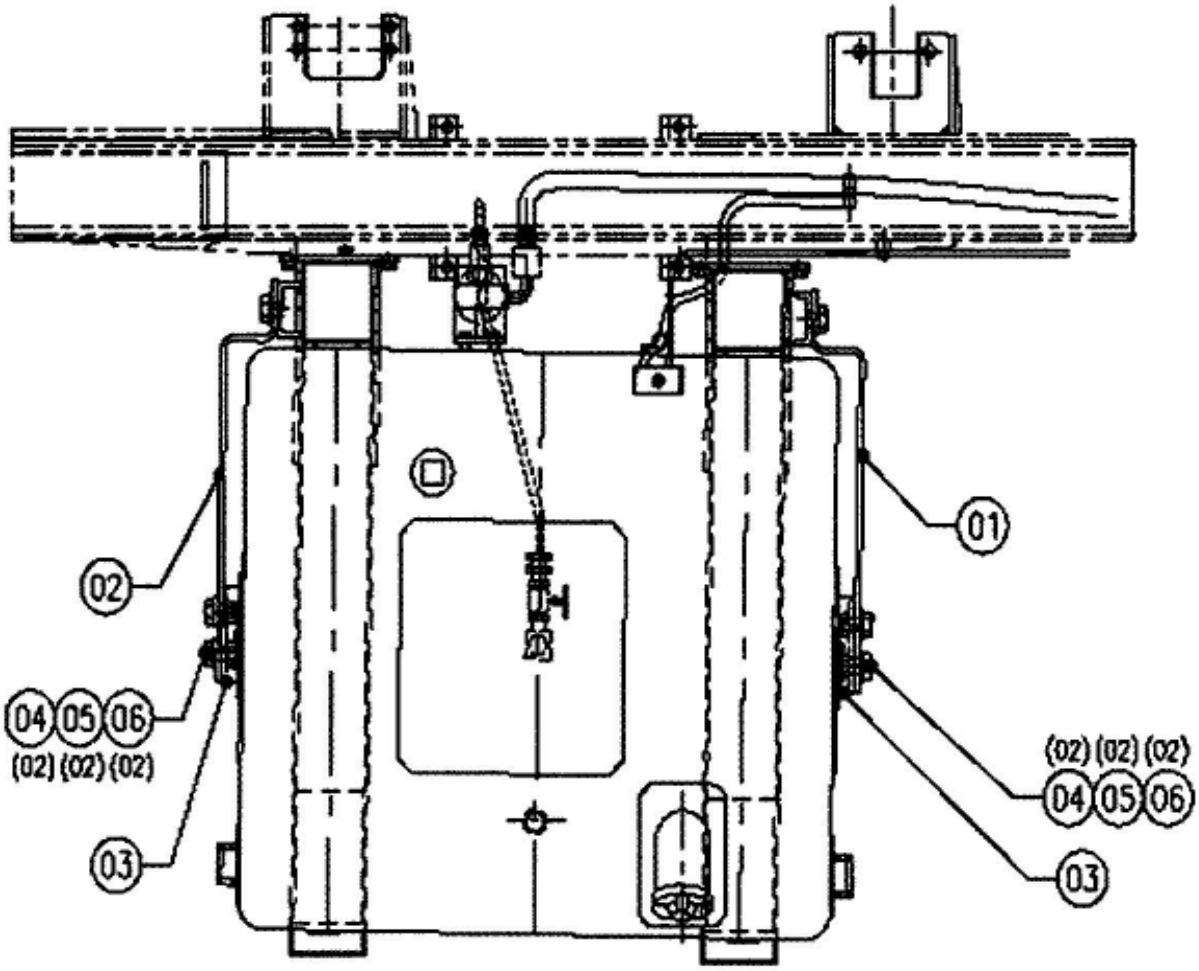

SLNO	PART NUMBER	DESCRIPTION	QTY	REMARKS
01	464310000130	BRACKET RH	1	
02	464310000230	BRACKET LH	1	
03	985-FL-03084	CHANNEL STR.	2	
04	CFB07-22250	HEX. BOLT	10	
05	CFW05-24060	WASHER	10	
06	CFW01-12268	SPRING WASHER	10	

FIG. 07 WIGGINS FAST FILLING FUEL SYSTEM

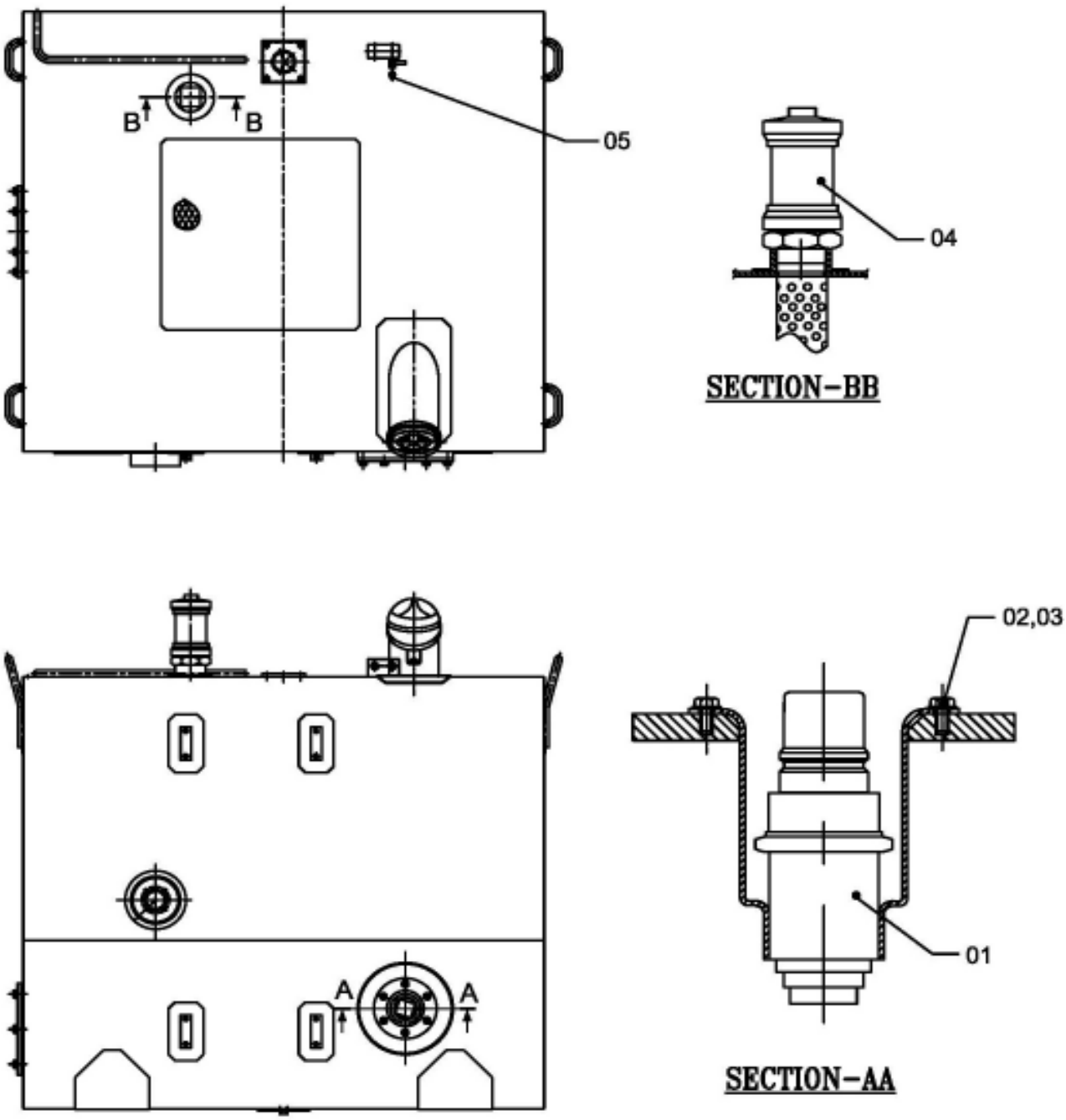

SLNO	PART NUMBER	DESCRIPTION	QTY	REMARKS
	985-FL-02006	FUEL TANK ASSY		
01	953-FL-02026	NIPPLE AND FLANGE ASSY	1	
02	CFS01-20816	HEX. SCREW	6	
03	CFW01-10825	SPRING WASHER	6	
04	953-FL-02001	VENT ASSY / AIR FILTERATION	1	
05	CPL01-21217	PLUG	1	

FIG. 08 EXHAUST SYSTEM INSTALLATION

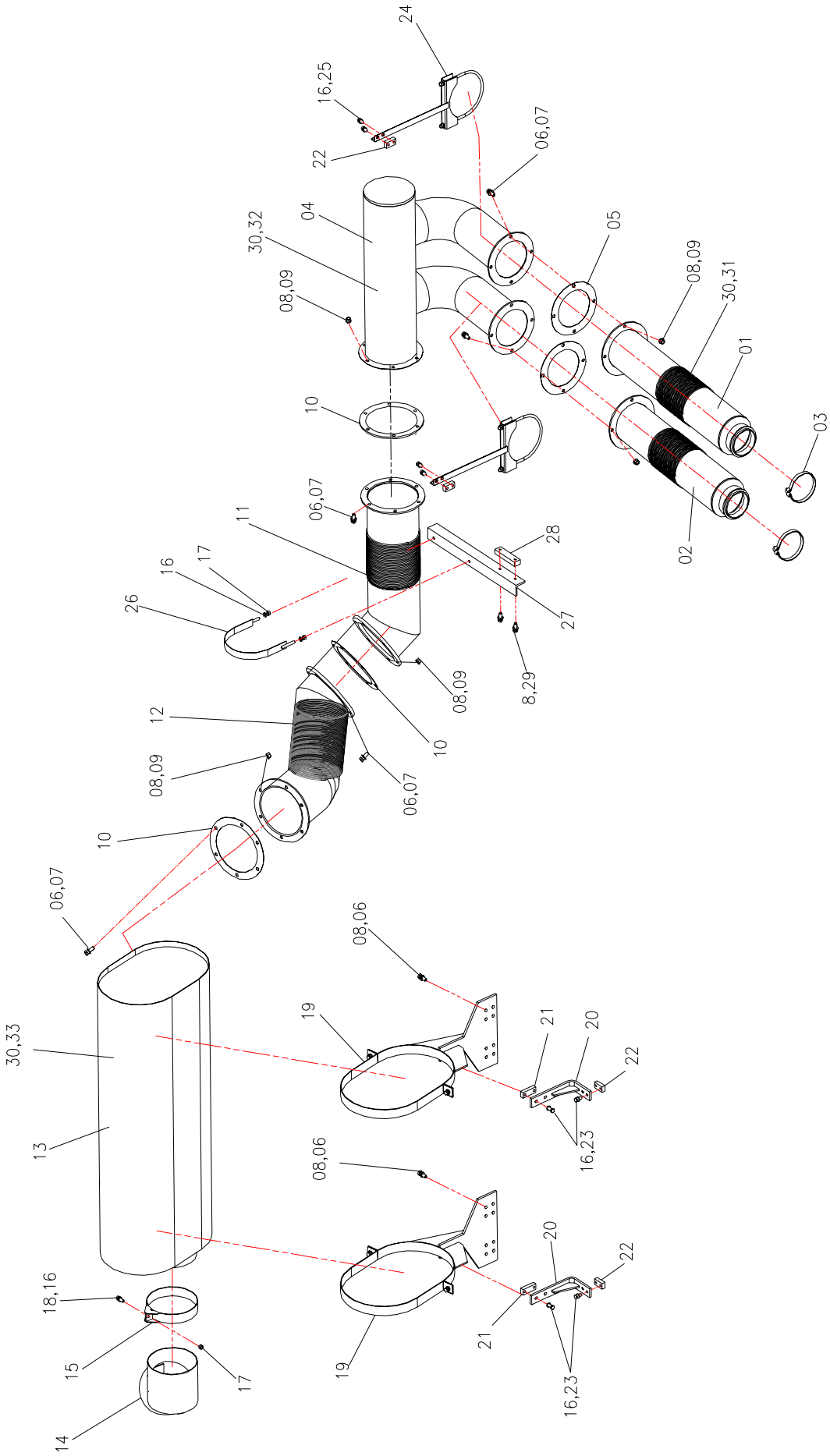

SLNO	PART NUMBER	DESCRIPTION	QTY	REMARKS
01	953-EX-01458	TUBE STR. LH BANK	1	
02	953-EX-01466	TUBE STR. RH BANK	1	
03	953-EX-10027	V-BAND CLAMP	2	CUMMINS
04	953-EX-01474	TUBE STR.	1	
05	953-EX-73362	GASKET	2	
06	CFS01-31235	HEX. SCREW	34	
07	CFW02-11225	WASHER	26	
08	CFW01-11236	WASHER, SPRING	36	
09	CFN01-11211	HEX. NUT	26	
10	953-EX-73727	GASKET	3	
11	953-EX-01506	TUBE STR.	1	
12	953-EX-01514	TUBE STR.	1	
13	953-EX-13462	MUFFLER	1	
14	953-EX-02243	ELBOW STR.	1	
15	985-EX-02227	BAND STR	1	
16	CFW01-11030	SPRING WASHER	15	
17	CFN01-21084	HEX. NUT	3	
18	CFS01-21030	HEX. SCREW	1	
19	953-EX-01522	BRACKET STR.	2	
20	953-EX-02268	BRACKET STR.	2	
21	CPW33-10070	TAPPED PAD	2	
22	CPW33-10050	TAPPED PAD	4	
23	CFS01-21025	HEX. SCREW	8	
24	953-EX-02179	BRACLET STR.	2	
25	CFS01-21020	HEX. SCREW	4	
26	953-EX-02251	BAND STR.	1	
27	953-EX-13908	ANGLE	1	
28	CPW35-12130	TAPPED PAD	1	
29	CFS01-31225	HEX. SCREW	2	
30	649000025610	EXHAUST BLANKET	20	
31	561600000330	CLIP	50	
32	953-EX-02284	CLIP	30	
33	953-EX-02276	CLIP	6	

II
ELECTRICAL SYSTEM

FIG. 11 INSTRUMENT PANEL SYSTEM

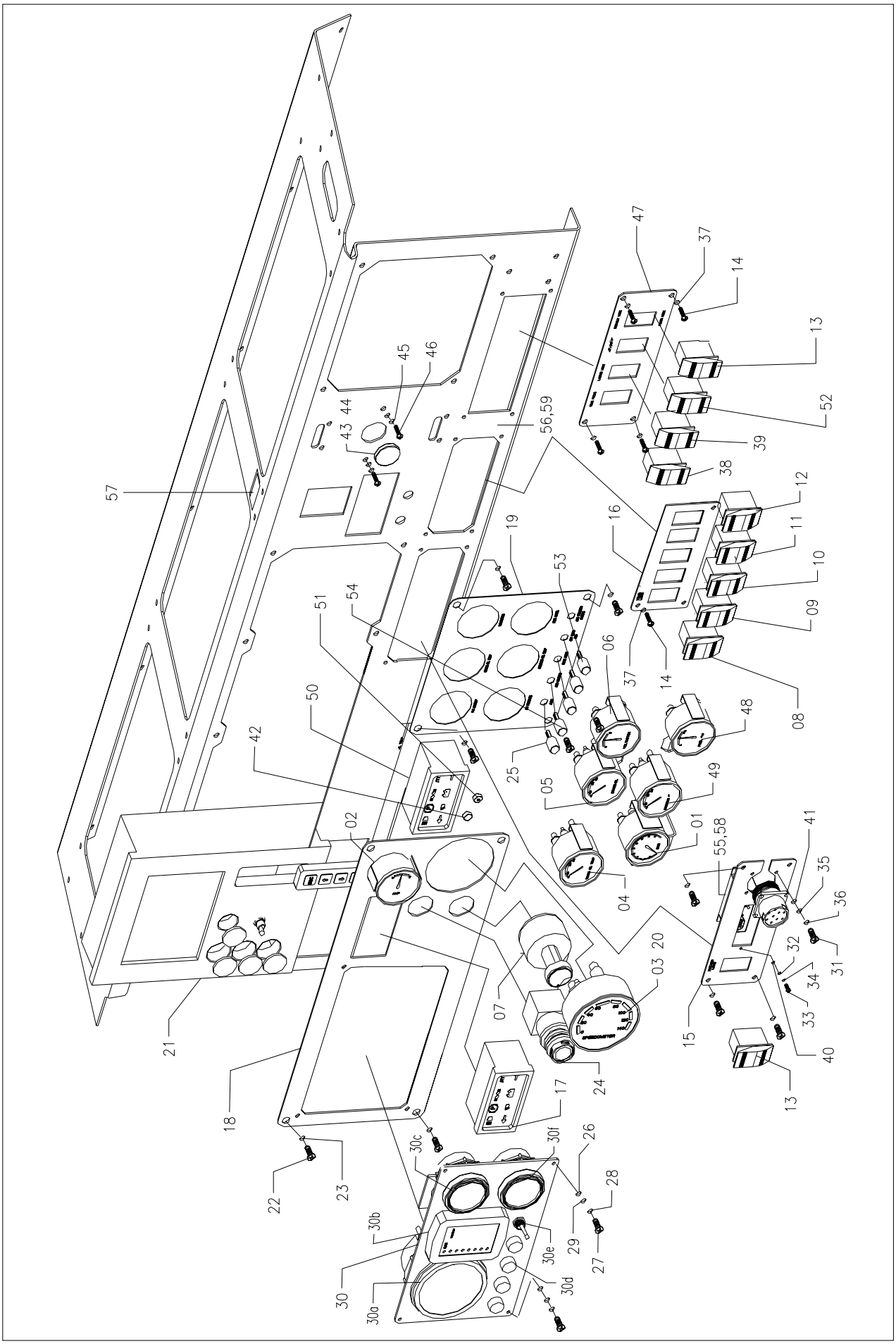

SLNO	PART NUMBER	DESCRIPTION	QTY	REMARKS
01	561842000400	AIR PRESSURE GAUGE	1	
02	561842000900	AMMETER	1	
03	561842001100	SPEEDOMETER	1	
04	985 EG 11088	T/C OIL TEMP GAUGE	1	
05	985 EG 11128	BRAKE OIL TEMP GAUGE	1	
06	935 EG 11133	VOLTMETER	1	
07	08086-20000	KEY SWITCH	1	
08	787-EG-81157	HEAD LIGHT SWITCH	2	
09	787-EG-81173	GAUGE LIGHT SWITCH	1	
10	787-EG-81157	FOG LIGHT SWITCH	1	
11	787-EG-81198	WIPER MOTOR SWITCH	2	
12	787-EG-81181	W.S. WASHER SWITCH	1	
13	787-EG-81173	HAZARD LIGHT SWITCH	2	
14	CFS15-30416	MOUNTING SCREWS	12	
15	953-RC-17074	PLATE(FOR DATA DOWN LOAD)	1	
16	955-EG-22111	SWITCH MOUNT PLATE	1	
17	953-EG-71007	WARNING CLUSTER-1	1	
18	953 RC 17106	GAUGE PANEL LH	1	
19	953-RC-17114	GAUGE PANEL RH	1	
20	766 EG 02075	SPEEDOMETER CABLE	1	
21	953 CO 02029	UEC DISPLAY SYSTEM	1	
22	CFS17-10616	SCREW	12	
23	581-06-15320	WASHER	12	
24	985-EG-72324	EMERG. STG. SWITCH	REF	
25	985-EG-82296	LED LAMP AMBER	1	
26	CFN01-10547	NUT	4	
27	CFS02-10516	BOLT	4	
28	CFW01-10513	SPRING WASHER	4	
29	CFW02-10510	PLAIN WASHER	8	
30	953-EG-03015	CUMMINS CLUSTER GAUGE	1	CIL SCOPE
30a	-	TACHO METER	1	
30b	-	CAN CONVERTOR	1	
30c	-	GAUGE TEMP	1	
30d	-	LIGHT INDICATOR	4	
30e	-	SWITCH TOGGLE	1	
30f	-	GAUGE OIL PR.	1	

FIG. 11 INSTRUMENT PANEL SYSTEM

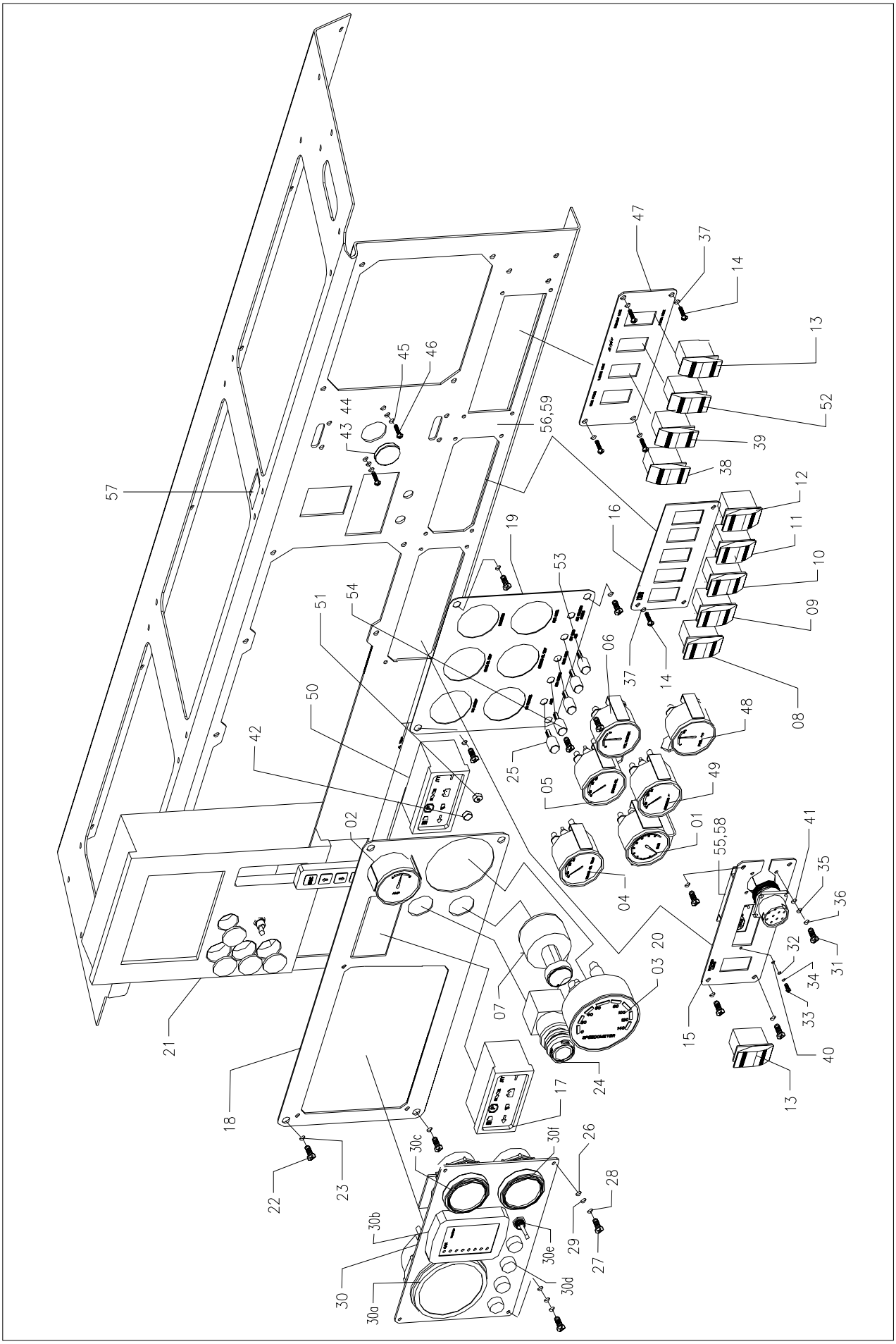

SLNO	PART NUMBER	DESCRIPTION	QTY	REMARKS
31	CFS01-20616	SCREW	4	
32	CFN01-10324	NUT	2	
33	CFS15-10345	SCREW	2	
34	CFW02-10305	WASHER	2	
35	CFN01-10432	NUT	4	
36	CFS15-10425	SCREW	4	
37	CFW02-10408	WASHER	12	
38	787-EG-81157	SWITCH		
		(FOR REAR FOCUS LAMP)	1	
39	787-EG-81198	SWITCH(FOR LADDER LIGHT)	1	
40	CFW01-10307	SPRING WASHER	2	
41	CFW01-10410	SPRING WASHER	4	
42	CGR05-01008	CAP	1	
43	561842002302	WARNING LAMP	1	
44	451 EG 11875	BUZZER	1	
45	CFN01-10432	NUT	2	
46	CFS02-10412	SCREW	2	
47	953 EG 11772	PLATE(REAR & LADDER LAMP)	1	
48	561842000700	FUEL LEVEL GAUGE	1	
49	953-EG-82259	STEERING OIL TEMP GAUGE	1	
50	953-EG-72652	WARNING CLUSTER(EGAT)	1	
51	985-EG-81883	CIRCUIT BREAKER(5A)	1	
52	787-EG-81157	SWITCH(FOR BLOWER)	1	
53	953-EG-82201	PUSH BUTTON SW(MOM ON)	3	
54	935-EG-11117	LED LAMP RED	1	
55	953-EG-82648	WIRELESS		
		DATA DOWNLOADING SYSTEM	1	
56	955-EG-04187	VHF MOBILE RADIO	1	
57	953-EG-82729	PAYLOAD/ SPEED DISPLAY	1	
58	953-EG-82737	REMOTE DATA LOGGER		
		MODEM KIT	1	
59	955-EG-04138	AUDIO SYSTEM	1	

FIG. 12 BATTERY BOX INSTALLATION

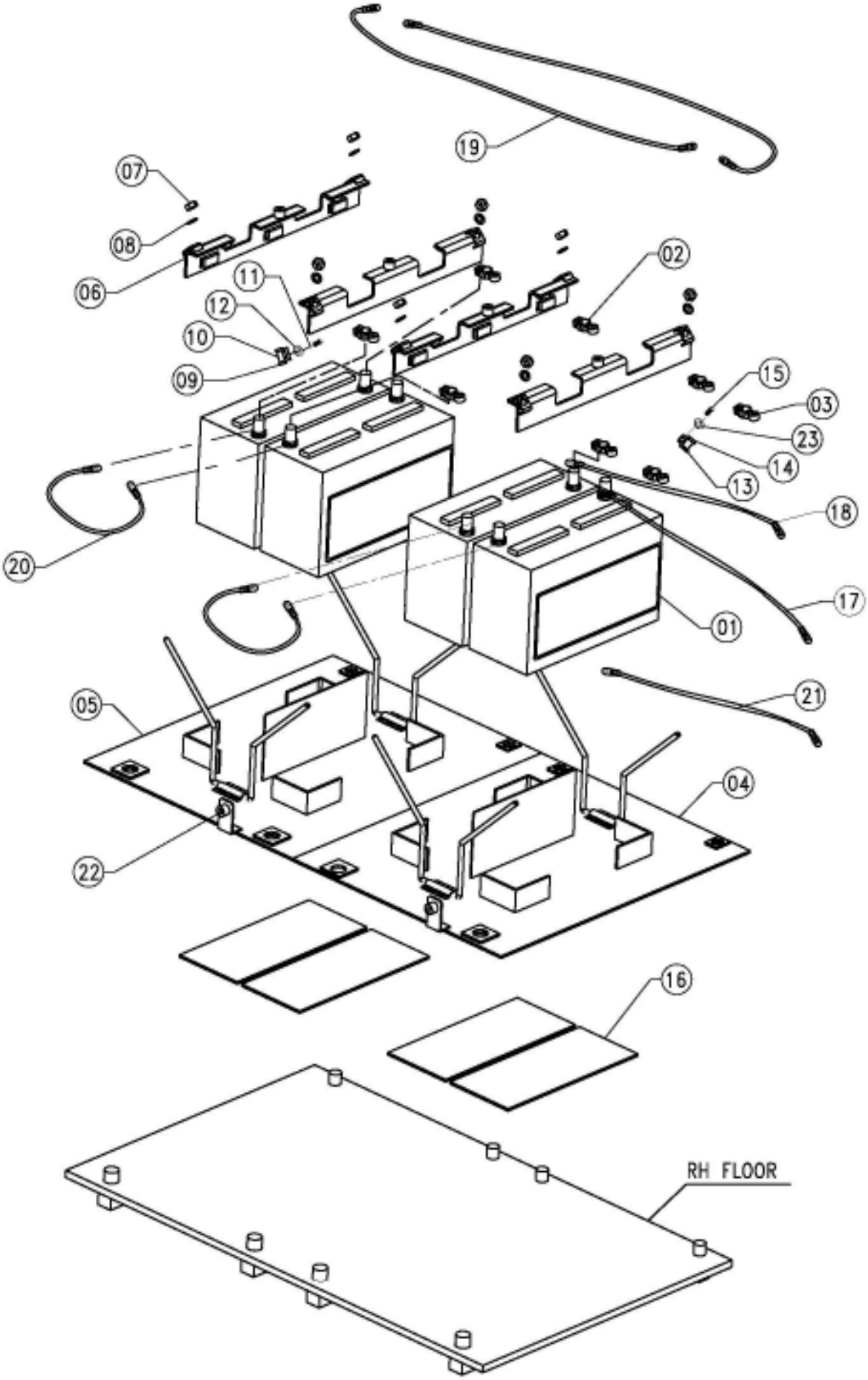

BATTERY BOX INSTALLATION **FIG NO. 12**

SLNO	PART NUMBER	DESCRIPTION	QTY	REMARKS
	953-EG-01363	BATTERY INSTL.	1	
01	774-EG-02019	POLY PROPYLENE BATTERY 200AH	4	
02	CET04-01175	TERMINAL (+)	4	
03	CET04-02160	TERMINAL (-)	4	
04	953-EG-02765	BRACKET STRU. LH	2	
05	953-EG-02757	BRACKET STRU. RH	2	
06	953-EG-02773	HOLD DOWN STRU.	4	
07	CFN01-11084	NUT	8	
08	CFW02-11020	WASHER PLAIN	8	
09	CCC06-02514	CLIP	8	
10	985-AS-64039	INSULATOR	8	
11	CFS01-21020	SCREW	18	
12	CFW05-10032	WASHER	20	
13	985 EG 66599	INSULATOR	10	
14	985-CO-02066	CLIP	3	
15	CFS01-21016	SCREW	2	
16	953-EG-61474	RUBBER SHEET	4	
17	953-EG-02262	CABLE ASSY	1	
18	953-EG-02254	CABLE ASSY.	1	
19	985-EG-02526	CABLE ASSY.	2	
20	953-EG02781	CABLE ASSY.	2	
21	985-EG-02494	CABLE ASSY.	1	
22	985-EG-02023	BRACKET	2	
23	CFW01-11030	SPRING WASHER	2	

FIG. 13 LIGHTING SYSTEM AND BACKUP ALRAM(1/2)

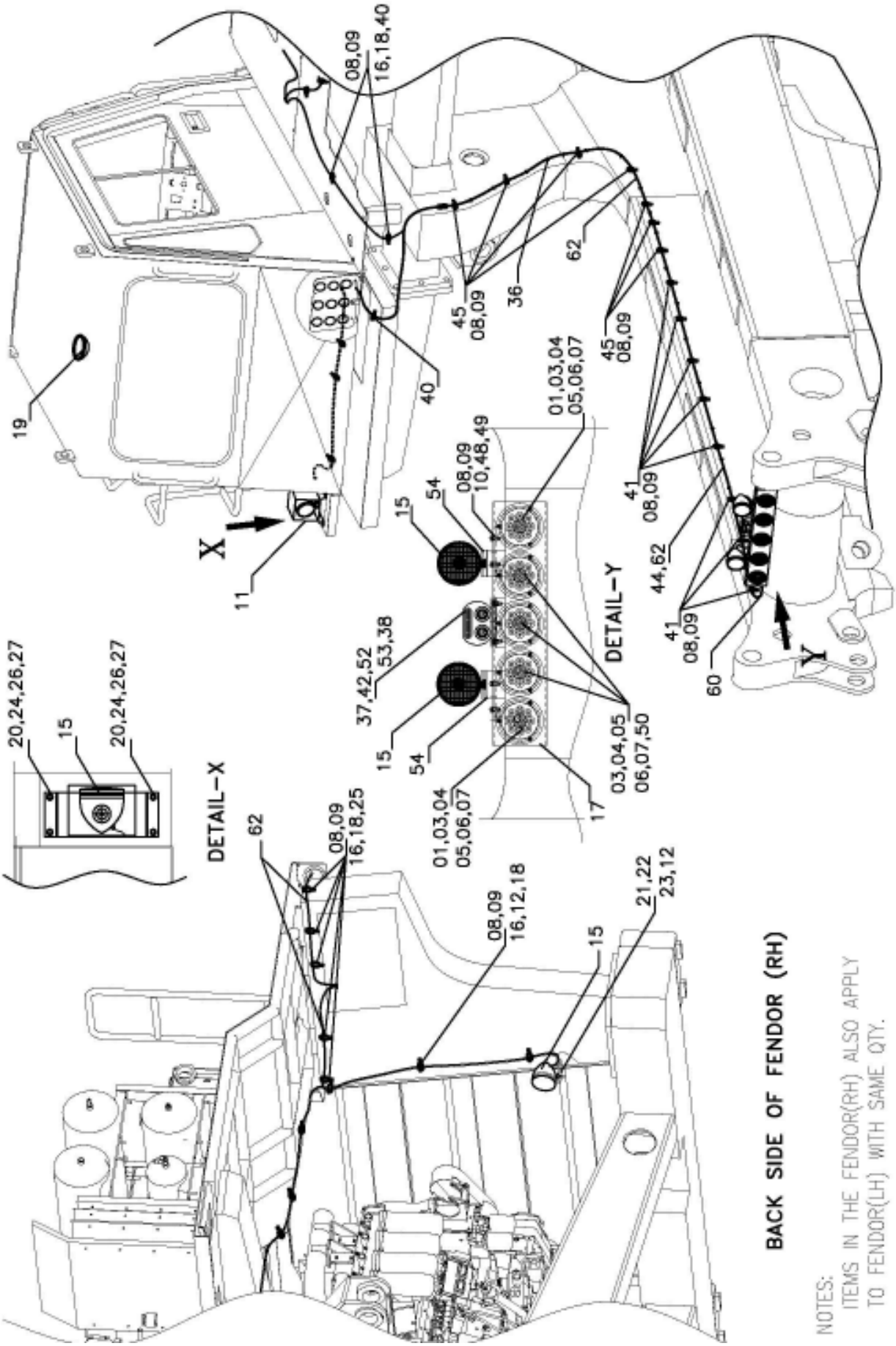

SLNO	PART NUMBER	DESCRIPTION	QTY	REMARKS
	953-EG-01047	LIGHTING SYSTEM & BACKUP ALRAM	REF	
	953-EG-01347	INSTLN. OF REAR FOCUS LAMP	REF	
	953-EG-01371	INSTLN. OF LADDER LIGHT	REF	
01	787-EG-81092	LED AMBER	4	
02	955-EG-11777	BRACKET	2	
03	787-EG-81116	WIRE PLUG	7	
04	CFW02-10416	SCREW	21	
05	CFW02-10408	WASHER	21	
06	CFN01-10432	NUT	21	
07	CFW01-10410	SPRING WASHER	21	
08	CFW01-11030	SPRING WASHER	33	
09	CFW02-11020	PLAIN WASHER	33	
10	CFS01-21025	SCREW	8	
11	953-EG-02692	BOX (REAR FOCUS LAMP)	1	
12	CCC06-00814	CLIP	6	
13	953-EG-11772	PLATE (LADDER LIGHT SW.)	1	INSIDE CABIN
14	787-EG-81198	ON-ON SWITCH	2	
15	955-EG-02112	HEAD LAMP	6	
16	CFS01-21016	SCREW	26	
17	953-EG-03072	BREACKET STUCTURE	2	REAR LAMP
18	CFW03-10022	BOSS	23	
19	953-EG-81327	ROOF LAMP(LED)	1	
20	CFS01-21220	SCREW M12	4	
21	955-EG-11299	SWITCH, TOGGLE	2	
22	955-EG-11696	BRACKET	REF	
23	CEC03-00035	BOOT	2	
24	CFW02-11225	PLAIN WASHER	4	
25	CCC06-01814	CLIP	6	
26	CFW01-11236	SPRING WASHER	4	
27	CPW05-12130	TAPPED PAD	1	
28	985-EG-11266	ELECTRONIC FLASHER	2	
29	CFS01-20516	SCREW	5	
30	CFW02-10510	WASHER	5	
31	CFW01-10513	SPRING WASHER	5	
32	955-EG-11274	RELAY	3	
33	985-EG-81834	TURN SIGNAL SWITCH	1	
34	955-EG-11477	BRACKET (LADDER LIGHT)	1	

FIG. 13 LIGHTING SYSTEM AND BACKUP ALRAM(2/2)

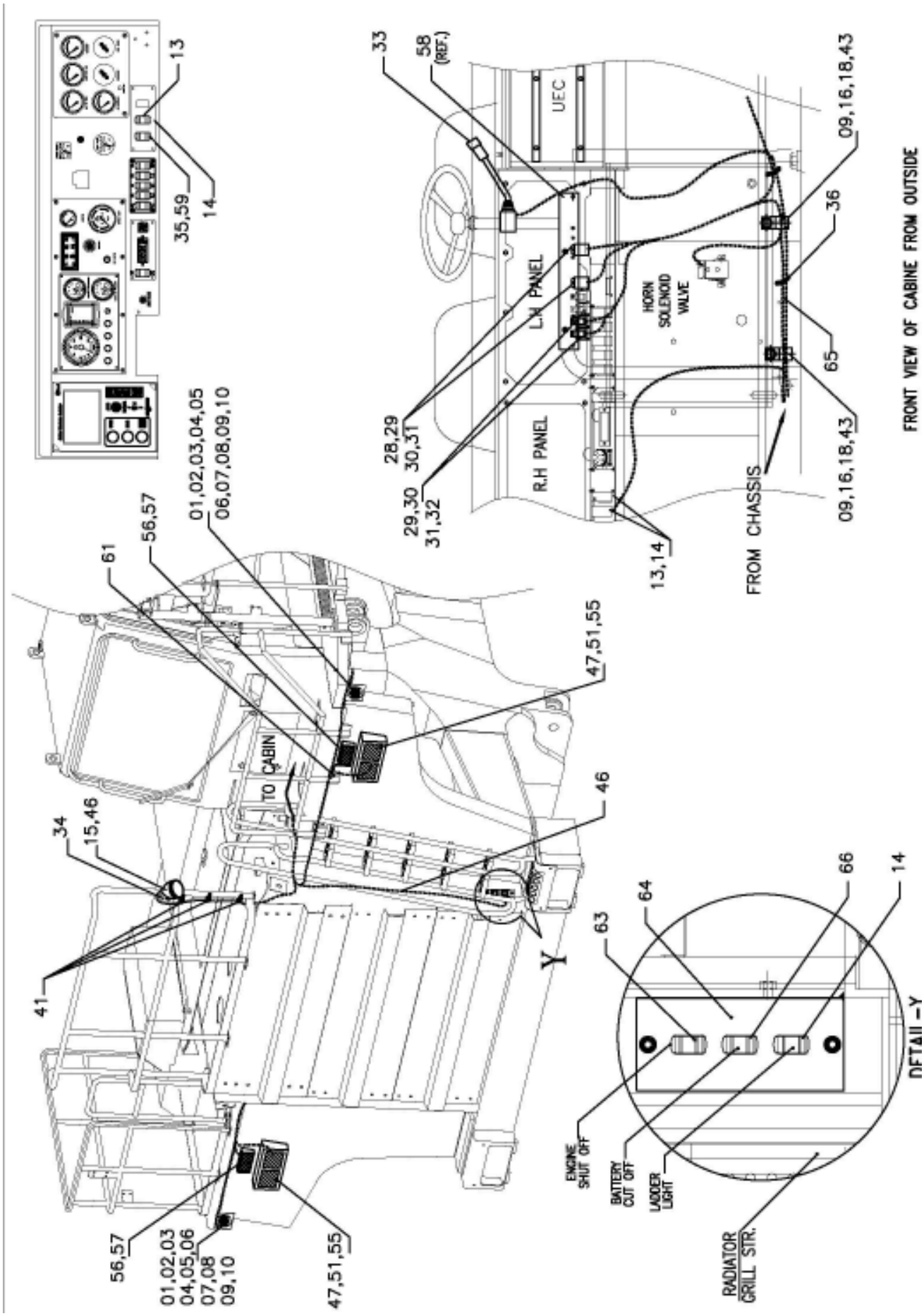

SLNO	PART NUMBER	DESCRIPTION	QTY	REMARKS
35	985-EG-11299	SWITCH	REF	
36	CCC10-00519	BAND	14	
37	CFS01-20816	SCREW	4	
38	935-EG-11669	BACKUP ALARM	1	D.G.M.S
39	935-EG-11393	BACKUP ALARM	OPT	
40	VC 7673	CLIP	5	
41	CCC06-02514	CLIP	15	
42	CFW01-10825	SPRING WASHER	4	
43	VL 9602	CLIP	5	
44	CCC10-00823	TIES	5	
45	CCC05-38135	CLAMP	8	
46	953-EG-02846	WIRE HARNESS (LADDER LHT)	REF	
47	452-EG-03084	HEAD LIGHT	4	
48	985-EG-11963	BRACKET	1	
49	CFN01-21084	NUT	4	
50	787-EG-81084	LED RED	3	
51	452-EG-11257	HOLDER (HEAD LIGHT)	4	
52	935-EG-02565	BRACKET ASSY.	1	
53	CFW01-10825	WASHER	4	
54	953 EG 11245	BRACKET (REAR)	2	
55	452-EG-11249	BULB (HALOGEN)	4	
56	787-EG-02035	BRACKET (FOG LAMP)	2	
57	649000038800	FOG LAMP	2	
58	953-EG-71437	DECAL (RELAY MOUNTING)	REF	
59	953-EG-71081	STICKER	REF	
60	953-EG-02562	WIREHARNESS (REAR LAMP)	REF	
61	953-EG-02554	WIREHARNESS (HEAD LIGHT)	REF	
62	953-EG-02538	WIREHARNESS (CHASSIS)	REF	
63	787-EG-81205	GND LEVEL ENG. SHUTOFF	1	
64	953-EG-11626	PLATE (GROUND LEVEL SW.)	1	
65	953-EG-02521	WIREHARNESS (CABIN)	REF	
66	787-EG-81157	GND LEVEL BAT. CUT OFF SW.	REF	
67	955-EG-82709	HORN (MEGASONIC)	1	
68	953-DZ-71421	DECAL (RELAY MOUNTING DETAILS)	1	
69	953-RC-17471	RELAY MTG PLATE	1	

FIG. 14 UNIFIED ELECTRONIC CONTROLLER (1/3)
(CONTROLLER SYS. WITH SWITCHES AND SENSORS)

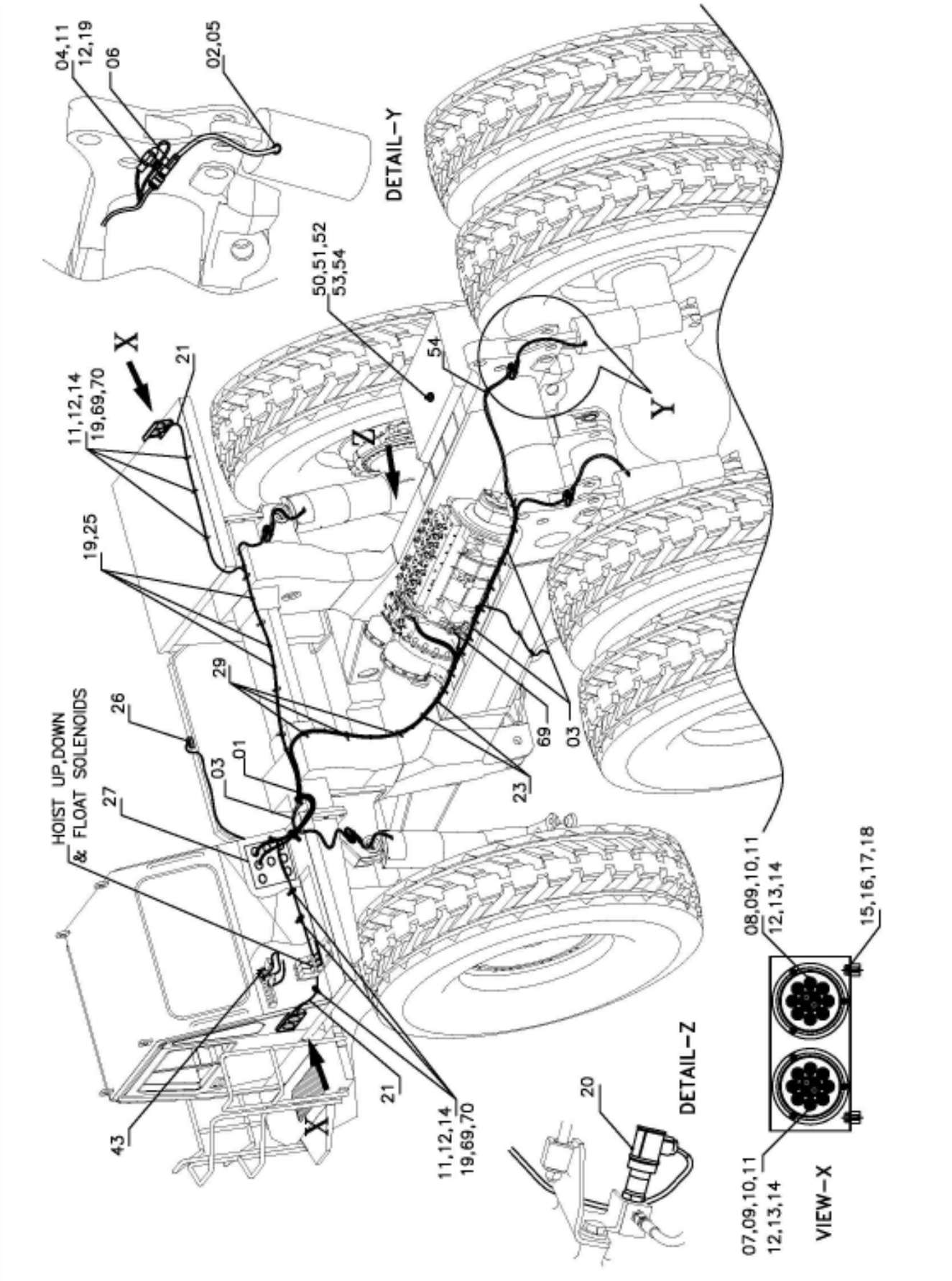

SLNO	PART NUMBER	DESCRIPTION	QTY	REMARKS
	953-EG-01088	UEC SYSTEM INSTALLATION	REF	
	953-EG-01152	SENSORS AND SWITCHES	REF	
01	953-EG-02538	WIREHARNESS (CHASSIS)	REF	
02	CGR01-01610	GROMMET	4	
03	953-CO-02053	UEC WIREHARNESS(CHASSIS)	1	
04	985-CO-02374	UEC SENSOR WH.	4	
05	985-CO-02463	QUICK COUPLING	4	
06	985-CO-02406	PRESSURE SENSOR	4	
07	985-EG-12246	DECK LAMP BRACKET	2	
08	787-EG-81092	LED LAMP AMBER	2	
09	787-EG-81084	LED LAMP RED	2	
10	787-EG-81116	WIRE PLUG	4	
11	CFS01-21016	SCREW	35	
12	CFW01-11030	SPRING WASHER	27	
13	CFW33-10060	TAPPED PAD	2	
14	CFW02-11020	PLAIN WASHER	12	
15	CFS02-10416	CAP SCREW	12	
16	CFW01-10410	SPRING WASHER	28	
17	CFW02-10408	PLAIN WASHER	28	
18	CFN01-10432	HEX. NUT	28	
19	CCC06-02514	CLAMP	14	
20	953-CO-11082	FILTER CLOG INDICATOR	1	
21	985-CO-02228	DECK LAMP WIREHARNESS	2	
22	953-CO-02012	UEC CONTROLLER MODULE	1	
23	CCC05-38135	CLAMP	REF	
24	CFW01-10619	SPRING WASHER	12	

FIG. 14 UNIFIED ELECTRONIC CONTROLLER (2/3)
(CONTROLLER SYS. WITH SWITCHES AND SENSORS)

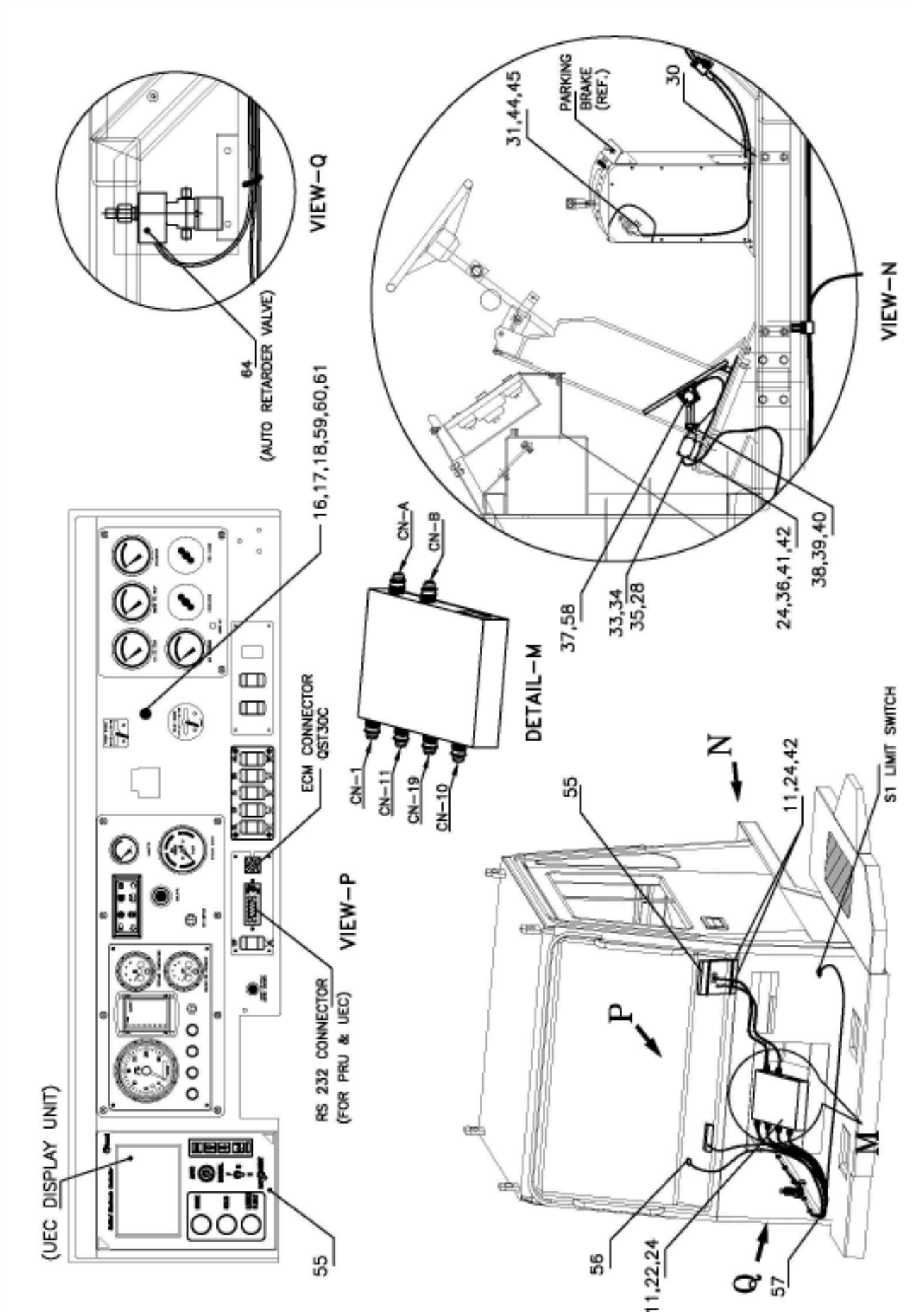

SLNO	PART NUMBER	DESCRIPTION	QTY	REMARKS
25	CCC10-00823	TIES	15	
26	985-EG-11306	RAD. WATER LEVEL SWITCH	1	
27	953-EG-11812	PLATE (MIL GRADE CONN.)	REF	
28	CFW01-10825	SPRING WASHER	2	
29	CCC10-00536	TIES	15	
30	985-CO-03176	BACKUP SWITCH WIREHARNESS	1	
31	985-CO-02269	UEC SHIFT TOWER	1	
32	985-CO-02139	SPEED SENSOR	2	
33	CFS01-20820	SCREW	2	
34	CFW02-10816	WASHER	2	
35	985-CO-03163	S1 LIMIT SWITCH	1	
36	953-EG-11107	BRACKET	1	
37	40558222	ELECTRONIC THROTTLE	REF	CIL SCOPE
38	CFS01-20820	SCREW	REF	
39	CFW02-10816	WASHER	REF	
40	CFW01-10825	SPRING WASHER	REF	
41	CFS01-10616	SCREW	4	
42	CFW02-10616	WASHER	4	
43	CFW01-10619	SPRING WASHER	4	
44	CFS01-21225	BOLT	4	
45	CFW01-11236	WASHER	4	
46	985-EG-11152	TOT,BOT SWITCH	2	
47	955-EG-72113	CONNECTOR	1	210622-04
48	985-EG-11696	TOP SWITCH	1	
49	985-EG-11177	BOT SENSOR	1	

FIG. 14 UNIFIED ELECTRONIC CONTROLLER (3/3)

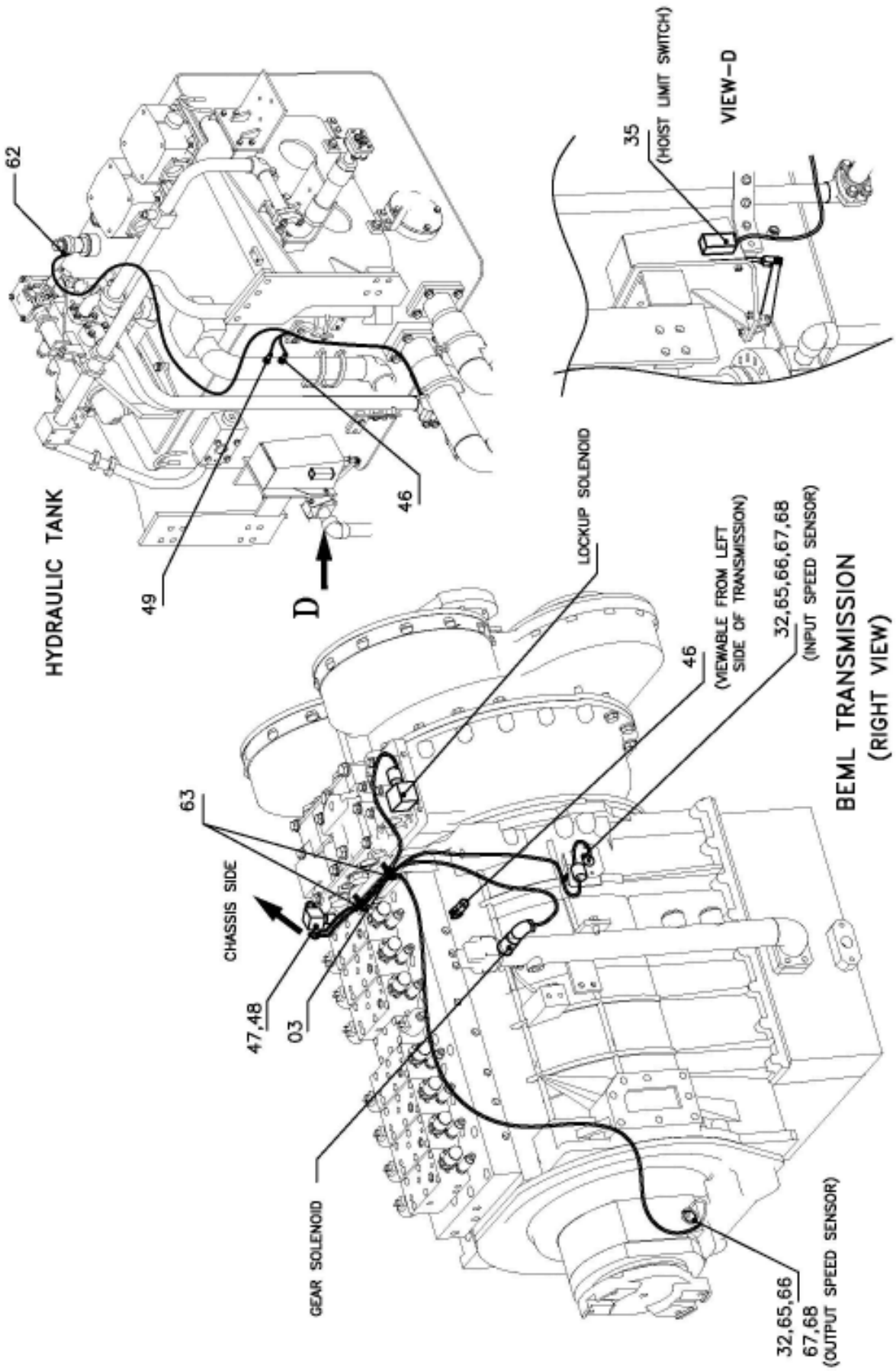

SLNO	PART NUMBER	DESCRIPTION	QTY	REMARKS
50	985-EG-86621	FUEL LEVEL SENSOR	1	
51	CFS02-20512	CAP SCREW	6	
52	CFW02-10510	PLAIN WASHER	6	
53	CFW01-10513	SPRING WASHER	6	
54	CCC06-00814	CLAMP	2	
55	953-CO-02029	UEC DISPLAY UNIT	1	
56	985-CO-02309	CENTRAL WARNING W/H	1	
57	953-CO-02045	UEC WIREHARNESS (CABIN)	1	
58	CPW33-08050	TAPPED PAD	1	
59	561842002302	CENTRAL WARNING LAMP	1	
60	451-EG-11875	BUZZER	1	
61	CFS02-10412	CAP SCREW	1	
62	985-TK-02037	HYD. OIL LEVEL INDICATOR	1	
63	CCC05-38135	CLIP	2	
64	283-95-14500	AUTO RETARDER VALVE	REF	
65	985-CO-11024	BRACKET	2	
66	CHS01-13045	O-RING	2	
67	CFW05-08023	WASHER	4	
68	CFB01-10835	BOLT	4	
69	985-EG-11152	TOT SWITCH	REF	
70	CFW03-10022	BOSS	6	
71	561842002200	PROXIMITY SWITCH	1	
72	649000010800	MOUNTING BRACKET	1	
73	787-EG-11026	BRACKET	1	
74	953-EG-81198	DC-DC-CONVERTER	1	
75	953-CO-03161	DATA LOGGER	1	
76	953-EG-82267	TEMPERATURE SENSOR UNIT	1	(MURPHY)

FIG. 15 AUTO EMERGENCY STEERING (1/2)

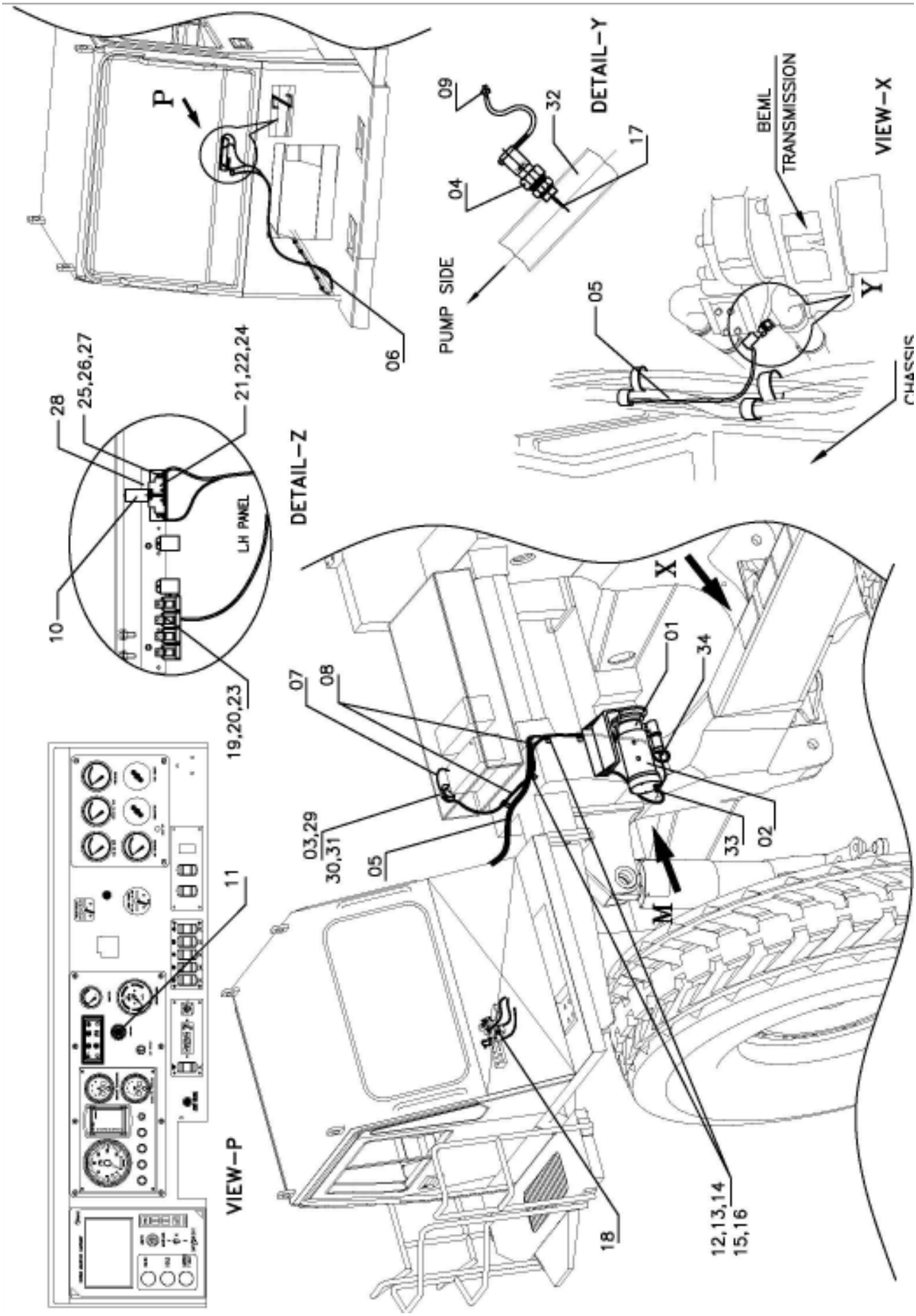

SLNO	PART NUMBER	DESCRIPTION	QTY	REMARKS
	953-EG-01339	AUTO EMERG. STEERING INSTLN	REF	
01	985-SS-03223	PUMP ASSY. (REMI)	REF	
02	985-SS-03215	MOTOR ASSY. (REMI)	REF	
03	561-06-61510	RELAY SWITCH ONLY	REF	REMI MAKE
04	985-SS-02219	FLOW SWITCH	REF	
05	953-EG-02473	WIRE HARNESS	REF	
06	953-EG-02432	WIRE HARNESS	REF	
07	953-EG-02295	CABLE ASSY.	1	
08	985-EG-02567	CABLE ASSY.	1	
09	08050-02710	CONNECTOR	1	
10	985-EG-72332	DELAY RELAY	1	
11	985-EG-72324	SWITCH	1	
12	CPW03-10022	BOSS	REF	
13	CFW01-11030	SPRING WASHER	7	
14	985-AS-64039	INSULATOR	7	
15	VL 9602	CLIP	7	
16	CFS01-21016	SCREW	7	
17	CHS02-02020	BACK UP RING	7	
18	985-EG-72349	PARKING PR. SWITCH	REF	
19	CFS01-20412	SCREW	1	
20	CFW02-10416	WASHER	1	
21	CFS15-10330	SCREW	2	
22	CFW02-10305	WASHER	2	
23	955-EG-11274	RELAY	1	
24	985-EG-81745	SOCKET	1	
25	CPW00-06012	BOSS	REF	
26	CFW02-10816	WASHER	REF	
27	CF01-10612	SCREW	REF	
28	955-RC-11051	BRACKET	REF	
29	CPW02-08016	TAPPED PAD	2	
30	CFS01-20820	BOLT	2	

FIG. 15 AUTO EMERGENCY STEERING (2/2)

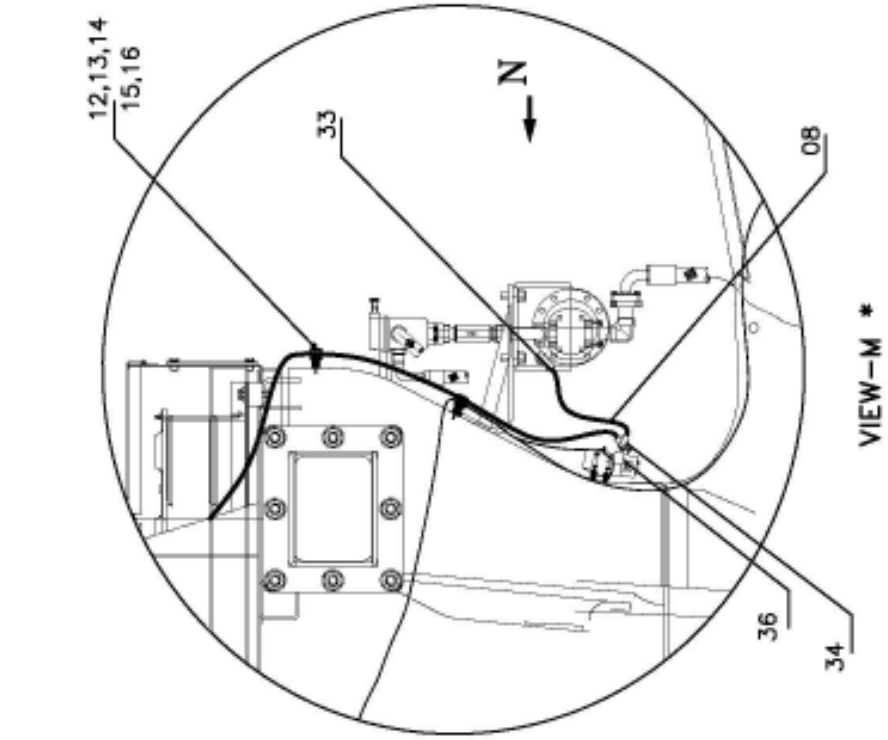

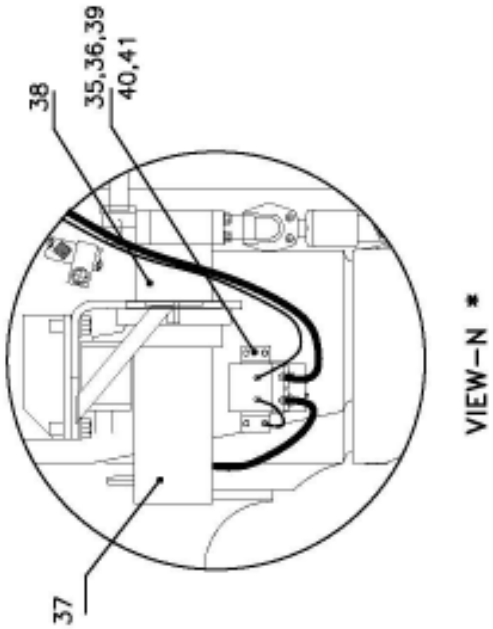

(* FOR GEAR HYDRAULIC SYSTEM ONLY)

SLNO	PART NUMBER	DESCRIPTION	QTY	REMARKS
31	CFW01-10825	SPRING WASHER	4	
32	985-SS-02179	TUBE STR.	REF	
33	CEC03-00035	CAP	7	
34	CEC03-00519	CAP	4	
35	CFW02-10616	WASHER	4	
36	985-SS-03191	24V DC CONTACTOR RELAY	REF	
37	985-SS-03183	MOTOR ASSY.	REF	
38	985-SS-03175	PUMP ASSY.	REF	
39	CPW00-06012	BOSS	4	
40	CFS01-20619	HEX. SCREW	4	
41	CFW01-10619	SPRING WASHER	4	

FIG. 16 ELECTRICAL SYSTEM

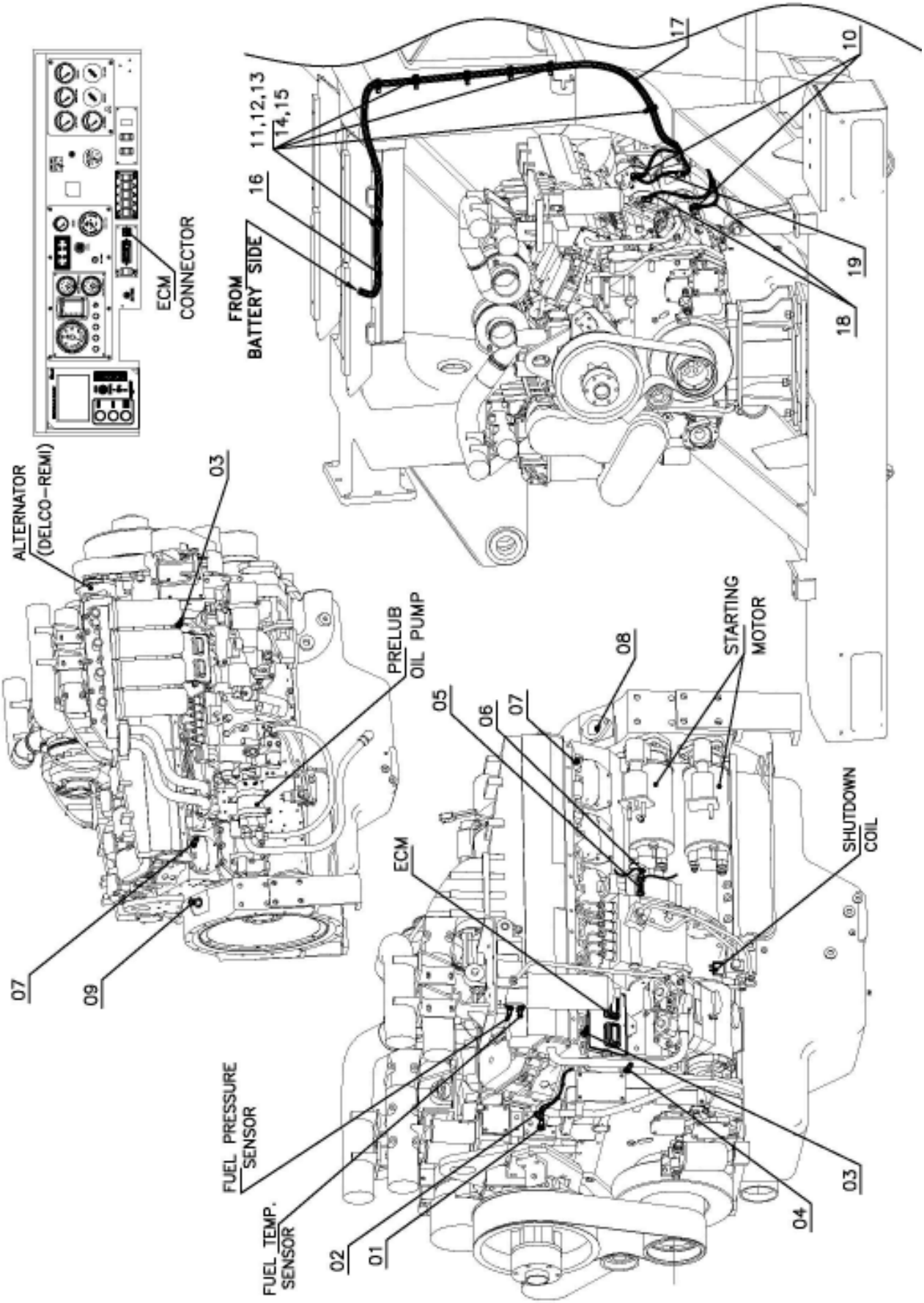

SLNO	PART NUMBER	DESCRIPTION	QTY	REMARKS
01	3865346	COOLANT TEMPERATURE	1	CIL SCOPE
02	3160404	COOLANT PRESSURE	1	CIL SCOPE
03	3348747	BANK INTAKE MANIFOLD PRESS.	1	CIL SCOPE
04	3085140	AMBIENT AIR PRESSURE	1	CIL SCOPE
05	3865337	PRE-LUB OIL PRESSURE	1	CIL SCOPE
06	3865337	OIL PRESSURE (RIFLE)	1	CIL SCOPE
07	3408345	BANK INTAKE MANIFOLD TEMP.	1	CIL SCOPE
08	4002064	ENGINE POSITION	1	CIL SCOPE
09	4002064	ENGINE SPEED	1	CIL SCOPE
10	CEC03-00035	CAP	4	
11	CPW03-10022	BOSS	8	
12	CFW01-11030	SPRING WASHER	16	
13	985-AS-64039	INSULATOR	7	
14	VL 9602	CLIP	8	
15	CFS01-21016	SCREW	8	
16	953-EG-02254	CABLE ASSY.	REF	BATTERY TO STARTING MOTOR
17	953-EG-02262	CABLE ASSY.	REF	BATTERY TO STARTING MOTOR
18	953-EG-02534	CABLE ASSY.	REF	STARTING MOTOR TO GROUND
19	953-EG-02542	CABLE ASSY.	REF	STARTING MOTOR TO STARTING MOTOR

FIG. 17 WIRE HARNESS, CABLE ASSY. , CIRCUIT BREAKERS(1/2)

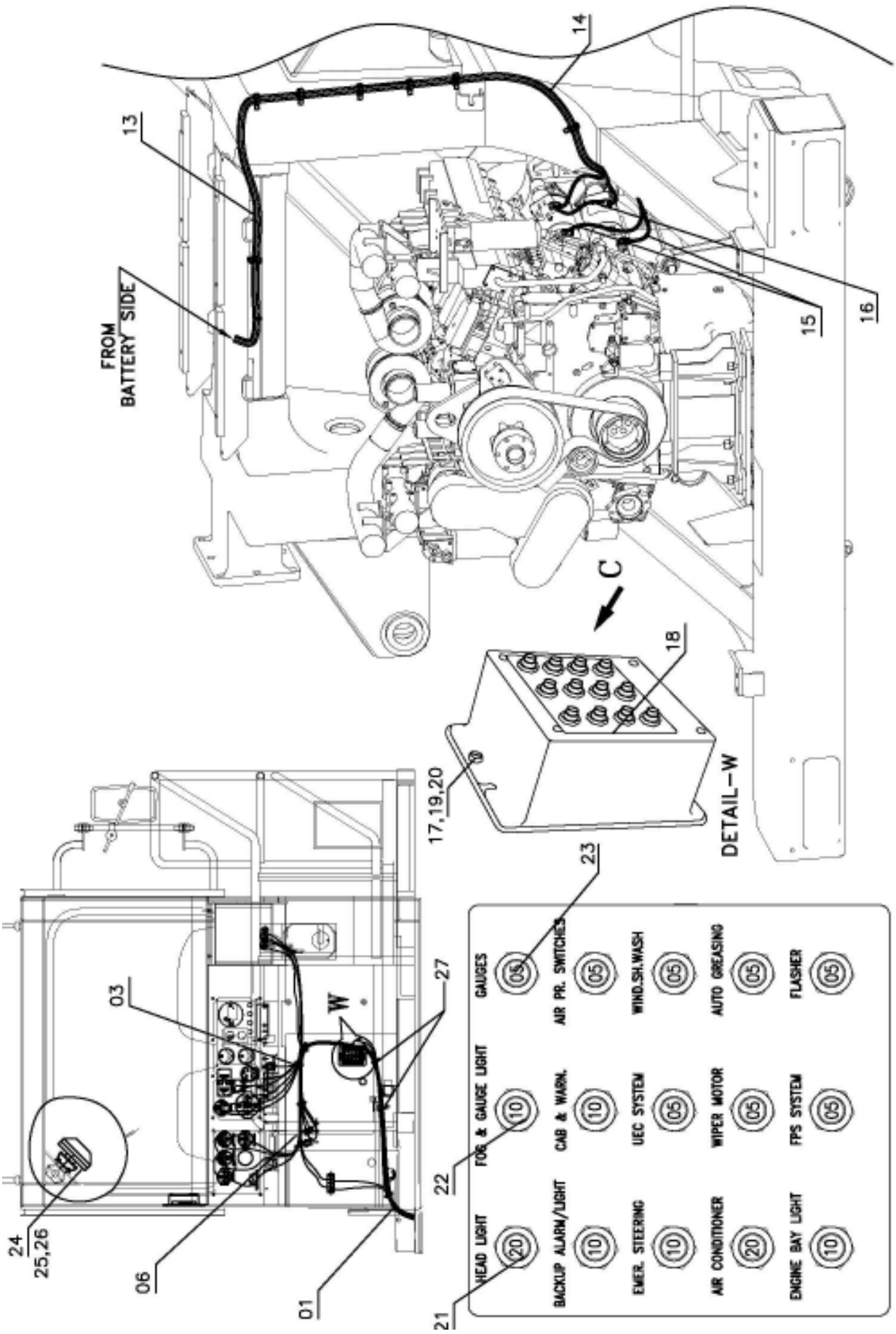

SLNO	PART NUMBER	DESCRIPTION	QTY	REMARKS
	953-EG-01363	INSTALLATION OF MAINTENANCE FREE BATTERY	REF	
01	953-EG-02521	WIREHARNESS (CABIN)	1	
02	953-EG-02562	WIREHARNESS (REAR LAMP)	1	
03	985-EG-03433	WIREHARNESS (LH PANEL)	1	
04	953-EG-02546	WIREHARNESS (STARTING/ALT)	1	
05	953-EG-02538	WIREHARNESS (CHASSIS)	1	
06	985-EG-03441	WIREHARNESS (RH PANEL)	1	
07	953-EG-02554	WIREHARNESS (HEADLAMP)	1	
08	953-EG-11812	PLATE (MIL GRADE CONNECTOR)	1	
09	CFN01-10324	HEX. NUT	25	
10	CFW02-10305	PLAIN WASHER	50	
11	CFW01-10307	SPRING WASHER	25	
12	CFS15-10316	SCREW M3	25	
13	953-EG-02254	CABLE ASSY.	1	BATTERY TO STARTING MOTOR
14	953-EG-02262	CABLE ASSY.	1	BATTERY TO STARTING MOTOR
15	953-EG-02534	CABLE ASSY.	2	STARTING MOTOR TO GROUND
16	953-EG-02542	CABLE ASSY.	1	STARTING MOTOR TO STARTING MOTOR

FIG. 17 WIRE HARNESS, CABLE ASSY. , CIRCUIT BREAKERS (2/2)

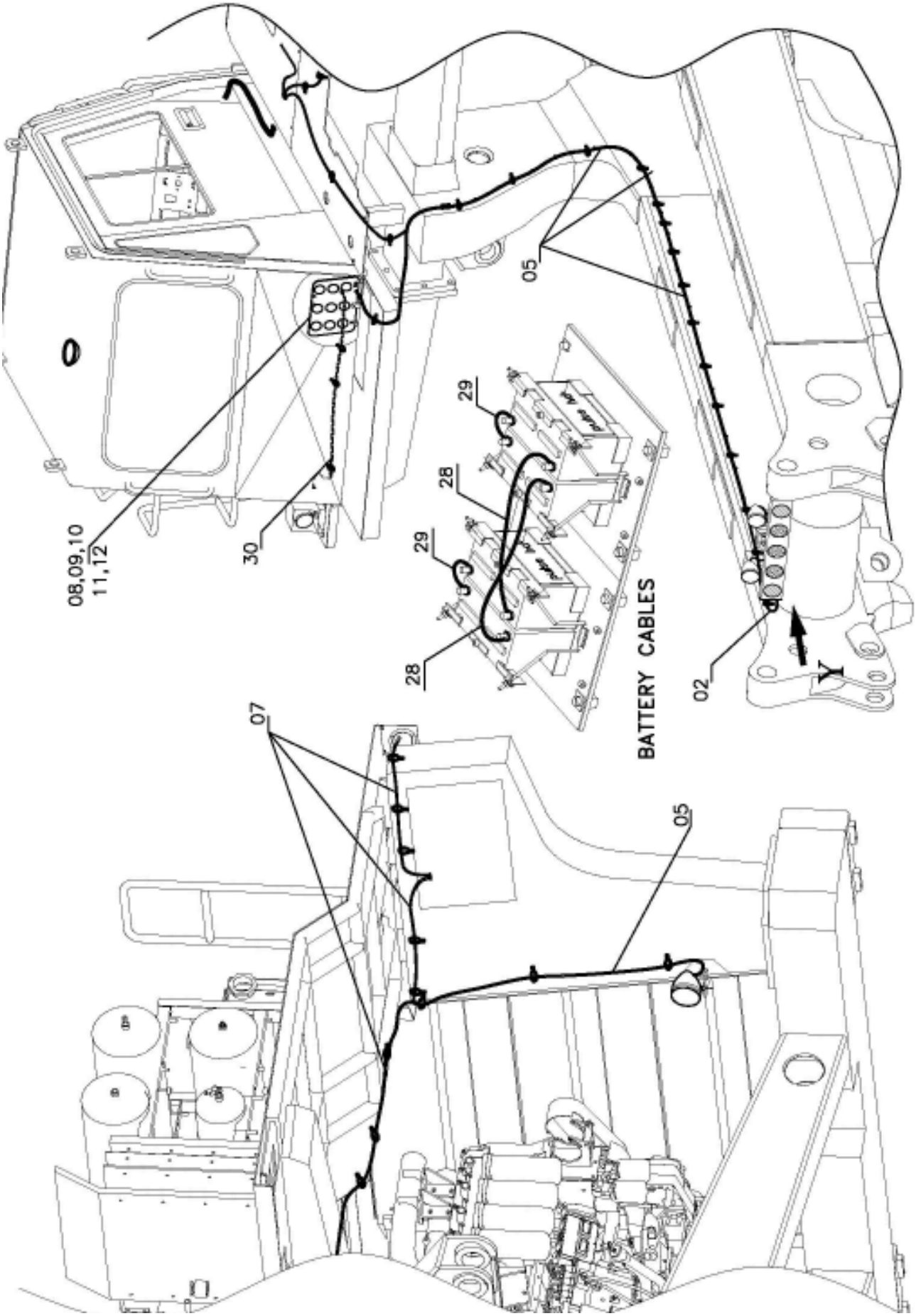

SLNO	PART NUMBER	DESCRIPTION	QTY	REMARKS
17	985-EG-02956	C.B. BOX ASSY	1	
18	953-EG-71031	STICKER (CKT BREAKER BOX)	1	
19	CFS15-10520	SCREW	2	
20	CFW01-10513	WASHER	2	
21	985-EG-81912	CIRCUIT BREAKER, 20A	2	
22	985-EG-81891	CIRCUIT BREAKER, 10A	5	
23	985-EG-81883	CIRCUIT BREAKER, 05A	8	
24	935-CC-01034	SPOT FAN	1	
25	CFW01-10619	SPRING WASHER	2	
26	CFS01-20620	SCREW	2	
27	CCC10-00536	TIES	25	
28	985-EG-02526	CABLE ASSY.	2	BATTERY TO BATTERY
29	953-EG-02781	CABLE ASSY.	2	BATTERY TO BATTERY
30	985-CO-02228	DECK LAMP WIREHARNESS		REF.
31	953-EG-03259	WIREHARNESS	1	OPTIONAL (EGAT)

FIG. 18 ANTI COLLISION WARNING SYSTEM INST.

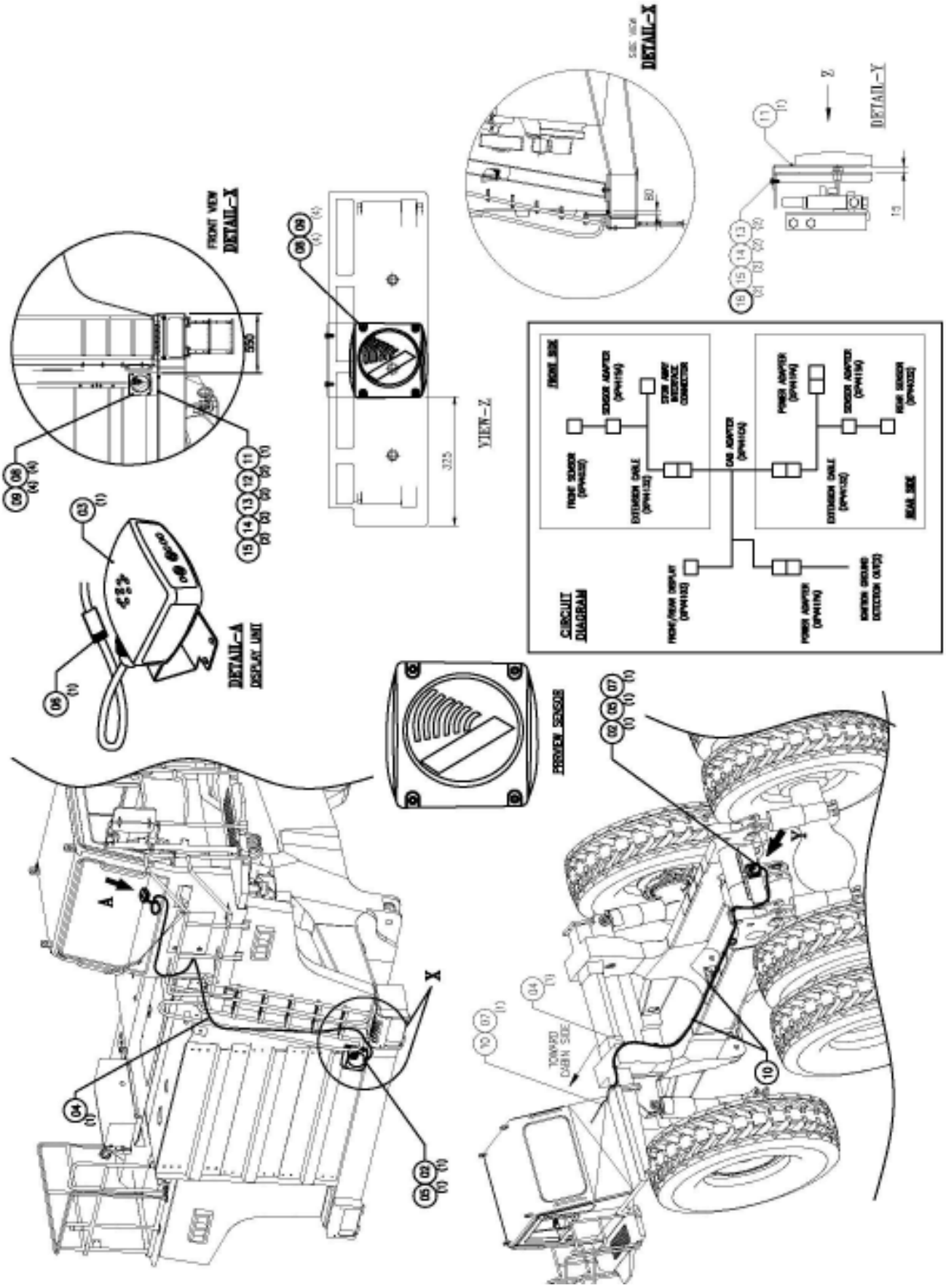

SLNO	PART NUMBER	DESCRIPTION	QTY	REMARKS
	953-EG-01411	INSTALLATION OF ANTI COLLISION SYSTEM		
01	953-EGB-0074	* CAS KIT	1	
02	953-EG-81692	* PREVIEW SENSOR	REF	
03	953-EG-81732	* DISPLAY UNIT	REF	
04	953-EG-81716	* EXTENSION CABLE	REF	
05	953-EG-81708	* SENSOR ADAPTOR	REF	
06	953-EG-81724	* CABLE ADAPTOR	REF	
07	953-EG-81749	* POWER ADAPTOR	REF	
08	CFS02-10530	SCREW	8	
09	CFW02-10510	PLAIN WASHER	8	
10	CCC10-00519	TIES	20	
11	953-EG-16823	BRACKET STRU	2	
12	CPW13-08016	TAPPED PAD	2	
13	CFW01-10825	SPRING WASHER	4	
14	CFW02-10816	PLAIN WASHER	4	
15	CFS01-20816	HEX. SCREW	4	
16	CFN01-10868	HEX. NUT	2	

FIG. 19 FRONT AND REAR CAMERA INSTALLATION

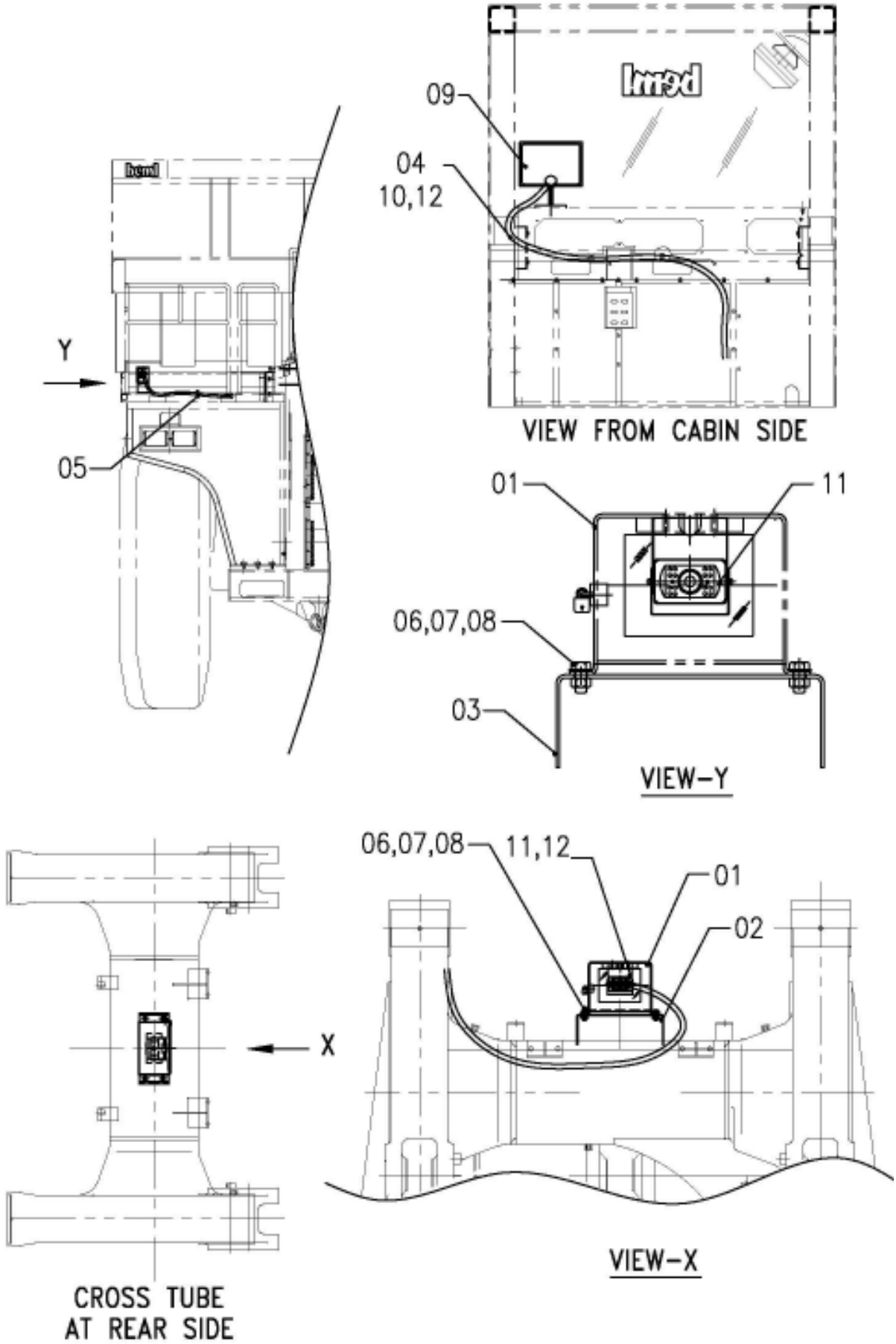

SLNO	PART NUMBER	DESCRIPTION	QTY	REMARKS
	955-EGB-0119	CAMERA KIT		
01	955-EG-02697	REAR VIEW CAMERA MOUNTING BOX	1+1	
02	953-EG-11301	BRACKET	1	
03	953-EG-11318	BRACKET	1	
04	CET01-10210	TERMINAL	1	
05	CCC06-00610	CLAMP	2	
06	CFS01-20814	HEX. SCREW	8	
07	CFN01-10868	NUT	8	
08	CFW01-10825	SPRING WASHER	8	
09	955-EG-82522	* MONITOR	1	
10	08022-04001	CONNECTOR WITH CAP	3	
11	955-EG-82514	* STANDARD COLOUR CAMERA	1+1	
12	955-EG-82539	* WIREHARNESS (CAMERA)	1+1	

FIG. 20 ABS/ASR SYSTEM INSTALLATION (1/2)

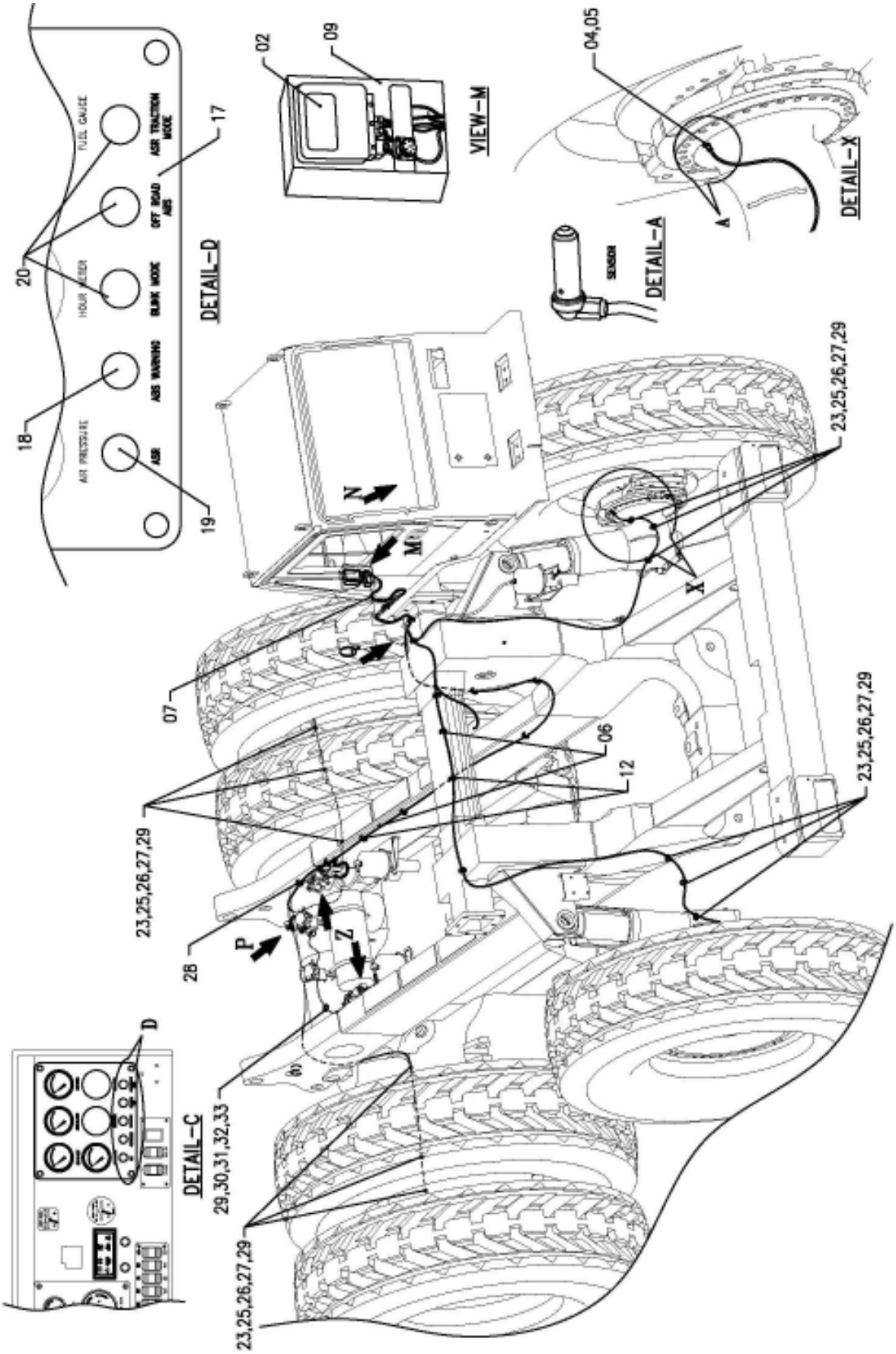

BH100

ABS/ASR SYSTEM INSTALLATION (1/2) **FIG NO. 20**

SLNO	PART NUMBER	DESCRIPTION	QTY	REMARKS
01	953-EGB-0058	ABS/ASR KIT		
02	953-EG-02602	ELECTRONIC CONTROL UNIT	1	
03	953-EG-02619	MODULATOR VALVE (REAR)	2	
04	953-EG-02627	SENSOR	4	
05	953-EG-02635	SENSOR BUSH	4	
06	953-EG-02643	FRAME HARNESS	1	
07	953-EG-02651	CAB HARNESS	1	
08	953-EG-02668	DIFFERENTIAL VALVE	1	
09	953-EG-02676	ECU BOX	1	
10	953-EG-02984	MODULATOR VALVE (FRONT)	1	
11	953-EG-02992	SENSOR GREASE	1	
12	CCC10 -00519	CABLE TIE	20	
13	953-AS-03098	PLATE BENT STR.	3	
14	CFW01-10825	SPRING WASHER	12	
15	CFW02-10816	PLAIN WASHER	12	
16	CFS01-20885	HEX. SCREW	6	
17	953-RC-17114	PANEL RH	REF	
18	935-EG-11117	LED INDICATOR (RED)	1	

FIG. 20 ABS/ASR SYSTEM INSTALLATION (2/2)

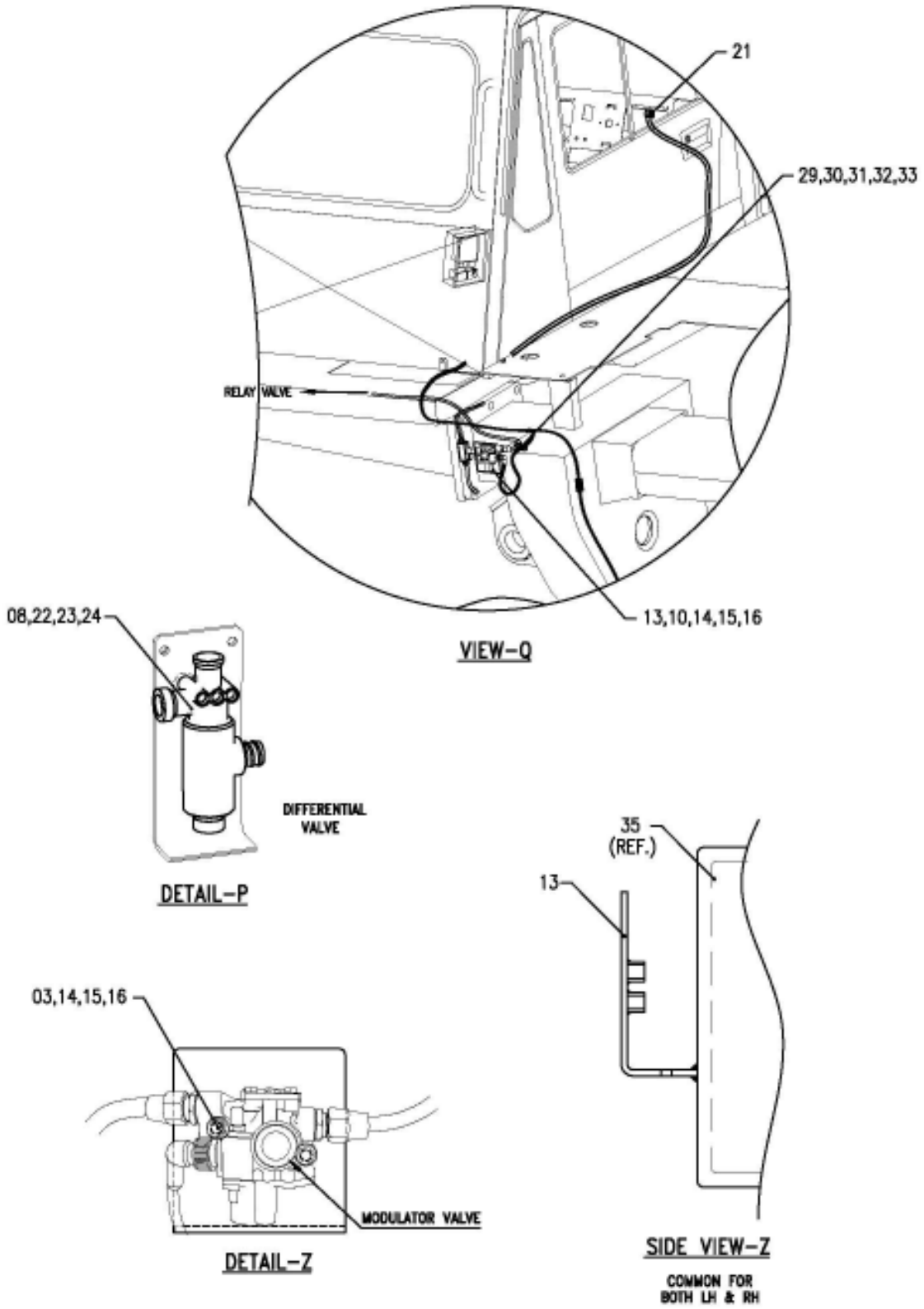

SLNO	PART NUMBER	DESCRIPTION	QTY	REMARKS
19	985-EG-82296	LED INDICATOR (AMBER)	1	
20	953-EG-82201	PUSH BUTTON SW. (MOM ON)	3	
21	955-EG-11274	RELAY	3	
22	CPW02-08016	TAPPED PAD	6	
23	CFW02-11020	PLAIN WASHER	12	
24	CFS01-11050	HEX. SCREW	2	
25	CPW03-10022	BOSS M10	10	
26	CFS01-21016	SCREW M10	10	
27	CFW01-11030	SPRING WASHER M10	10	
28	CCC10-00414	CABLE TIE (SMALL)	20	
29	CCC05-38135	CLAMP (SMALL)	15	
30	CPW02-08016	BOSS M8	2	
31	CFS01-20814	SCREW M8	2	
32	CFW01-10825	SPRING WASHER M8	2	
33	CFW02-10825	PLAIN WASHER M8	2	
34	985-AS-02085	BRACKET STR.	REF	
35	953-MF-31637	REAR CROSS L.H.	REF	
36	08027-10260	CONNECTOR 2PF	4	
37	287-09-11240	BOOT 2PF	4	
38	08027-10210	CONNECTOR 2PM	4	
39	287-09-11140	BOOT 2PM	4	

NOTE: SL NO. 02 TO 09 ARE PART OF SL NO. 01 (ABS ASR KIT).

III
POWER TRAIN, DRIVE SHAFT, DIFFERNTIAL & WHEELS

FIG. 26 ENGINE & ENGINE / TRANSMISSION ASSY.

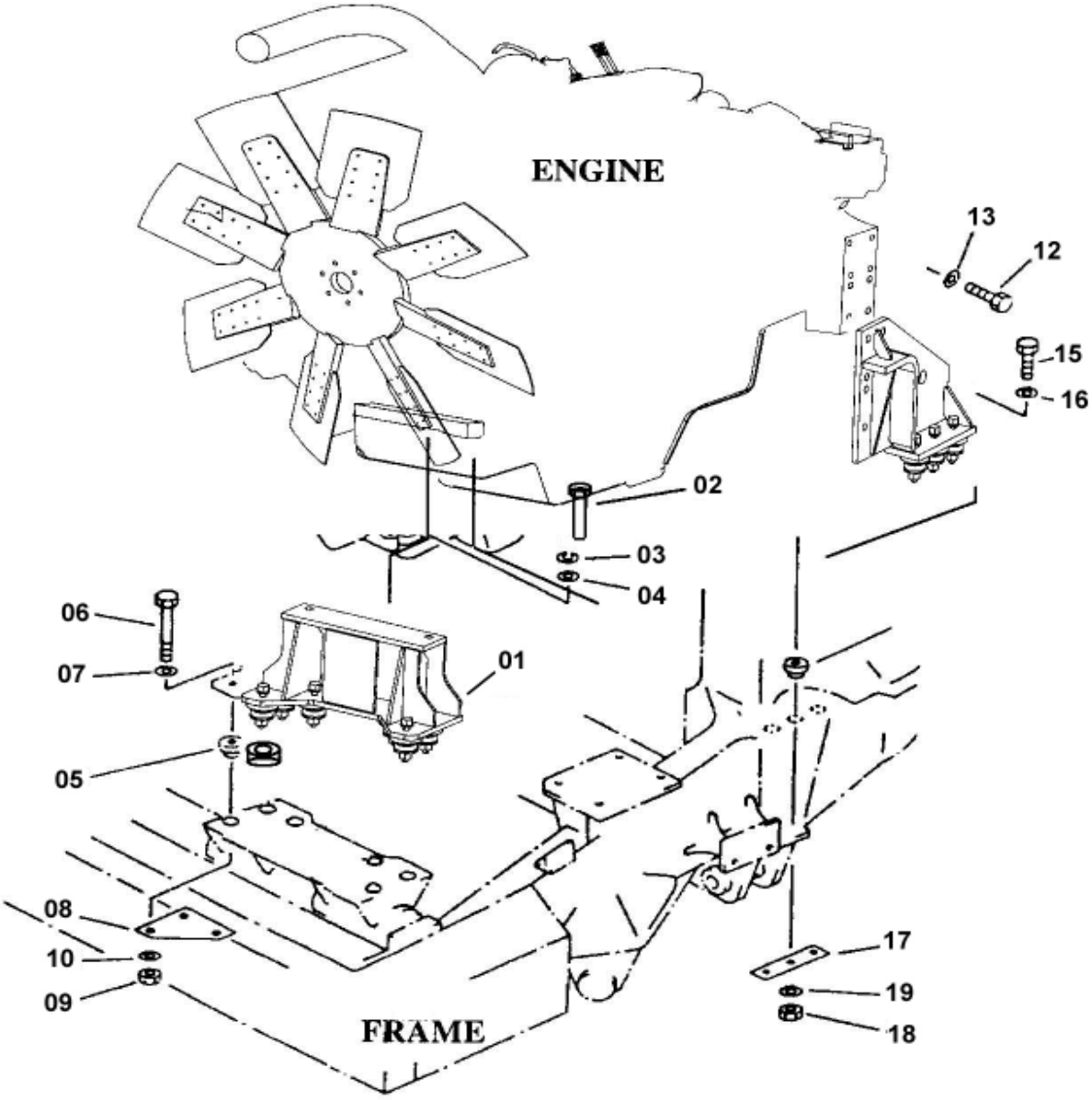

ENGINE / TRANSMISSION ASSEMBLY

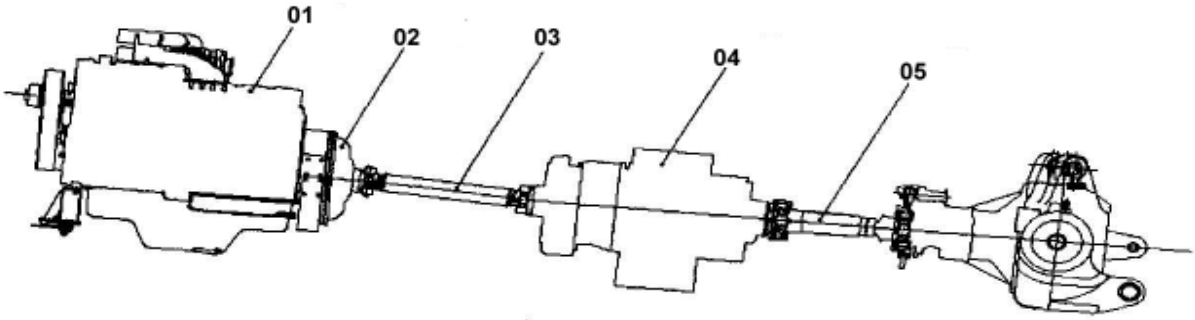

SLNO	PART NUMBER	DESCRIPTION	QTY	REMARKS
	ENGINE ASSEMBLY			
	953-PD-00013	POWER TRAIN INST		
	953-PI-01056	ENGINE ASSY		
01	985-EI-02061	BRACKET	1	
02	CFB08-21800	HEX. BOLT	2	
03	CFW01-11854	SPRING WASHER	20	
04	CFW05-18045	WASHER	14	
05	985-EI-02029	CUSHION	12	
06	CFB08-21820	HEX. BOLT	12	
07	CFW05-18045	WASHER	14	
08	985-EI-11028	PLATE	2	
09	CFN04-11815	HEX. NUT	12	
10	CFW01-11854	SPRING WASHER	20	
11	985-EI-02037	BRACKET	2	
12	CFB25-21945	HEX. BOLT	8	
13	CFW01-11957	SPRING WASHER	8	
14	985-EI-02029	CUSHION	12	
15	CFB08-21820	HEX. BOLT	12	
16	CFW05-18045	WASHER	14	
17	985-EI-11011	PLATE	2	
18	CFN04-11815	HEX. NUT	12	
19	CFW01-11854	SPRING WASHER	20	
	ENGINE / TRANSMISSION ASSEMBLY			
01	953-PI-01056	ENGINE ASSY	1	
02	953-TM-02013	TRANSMISSION ASSY	1	
03	953-PI-01064	PROPELLER SHAFT (FRONT)	1	
04	953-PI-01015	PROPELLER SHAFT (REAR)	1	
05	953-DA-01004	OUTPUT SHAFT ASSY	1	

FIG. 27 FRONT PROPELLER SHAFT ASSEMBLY

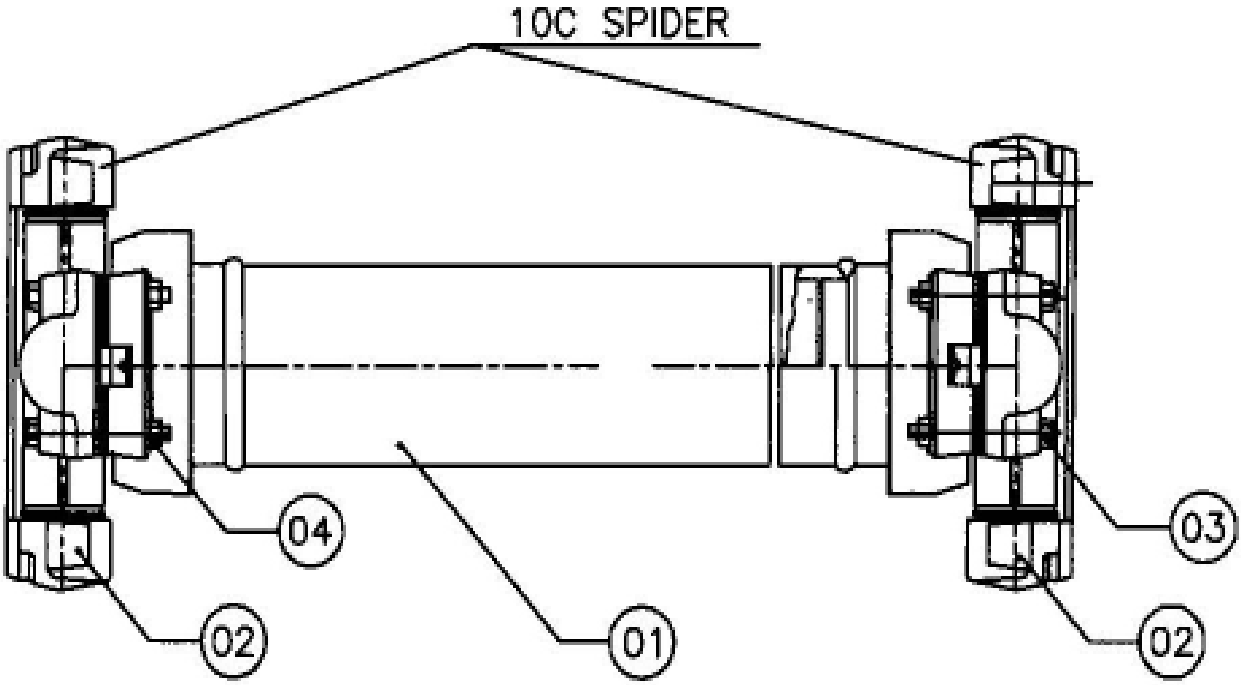

FRONT PROPELLER SHAFT ASSEMBLY **FIG NO. 27**

SLNO	PART NUMBER	DESCRIPTION	QTY	REMARKS
	953-PI-01064	PROPELLER SHAFT		
	953-PD-01026	PROPELLER SHAFT (FRONT)	1	
01	953-PI-11084	TUBE ASSY	1	
02	953-PI-11027	SPIDER ASSY	2	
03	953-PD-10163	HEX. BOLT	8	
04	953-PI-11411	HEX. NUT	8	

FIG. 28 FRONT PROPELLER SHAFT GUARD INST.

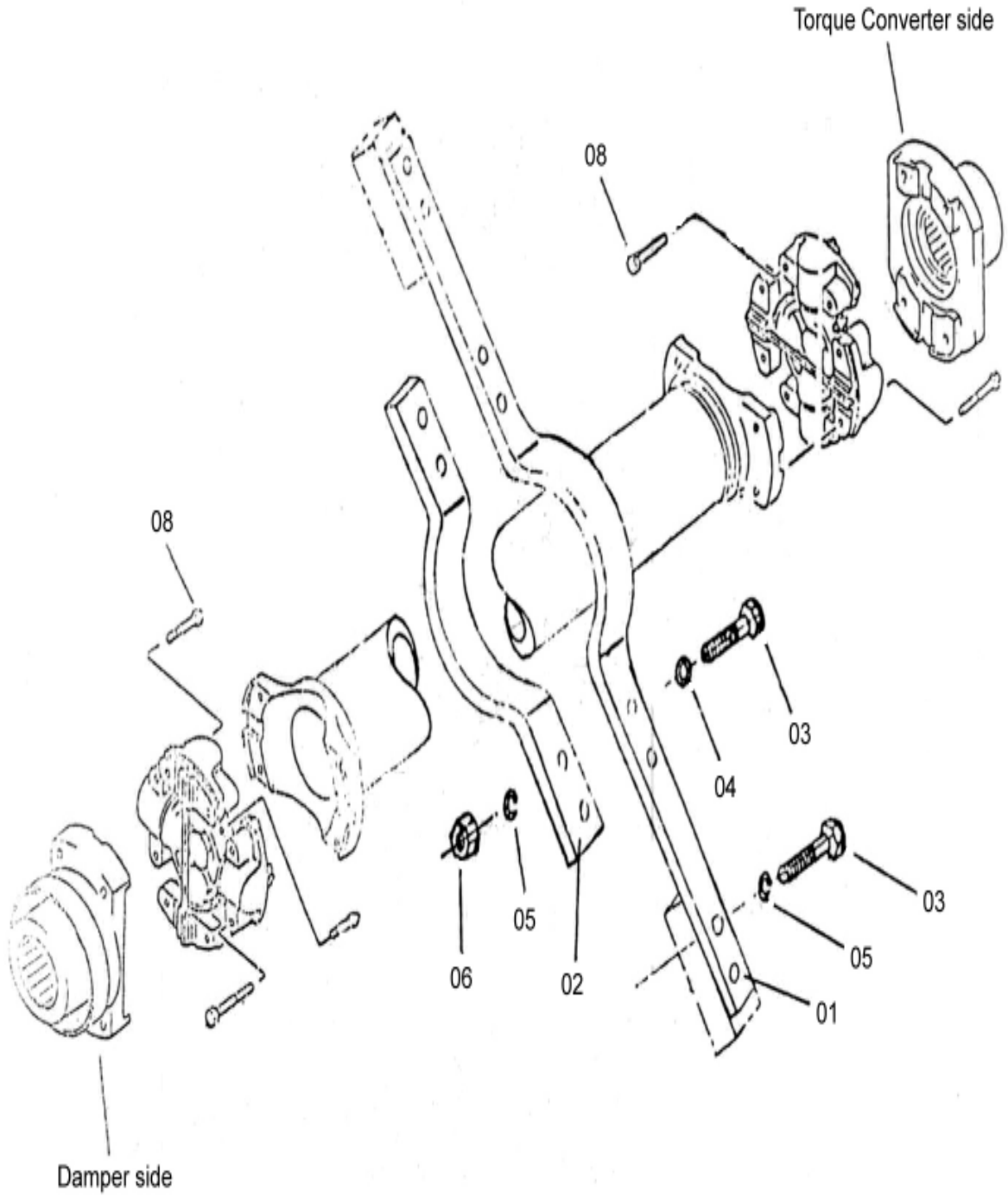

FRONT PROPELLER SHAFT GUARD INST. **FIG NO. 28**

SLNO	PART NUMBER	DESCRIPTION	QTY	REMARKS
01	985-UJ-11051	GUARD	1	
02	985-UJ-11068	GUARD	1	
03	CFS01-31245	HEX. SCREW	8	
04	CFW01-12032	WASHER	4	
05	CFW01-11236	SPRING WASHER	8	
06	CFN01-11211	HEX. NUT	4	
07	953-PI-10088	TAPPED PAD	2	
08	953-PI-10014	5/8"-18UNF-2A HEX. BOLT	8	

FIG. 29 REAR PROPELLER SHAFT ASSY.

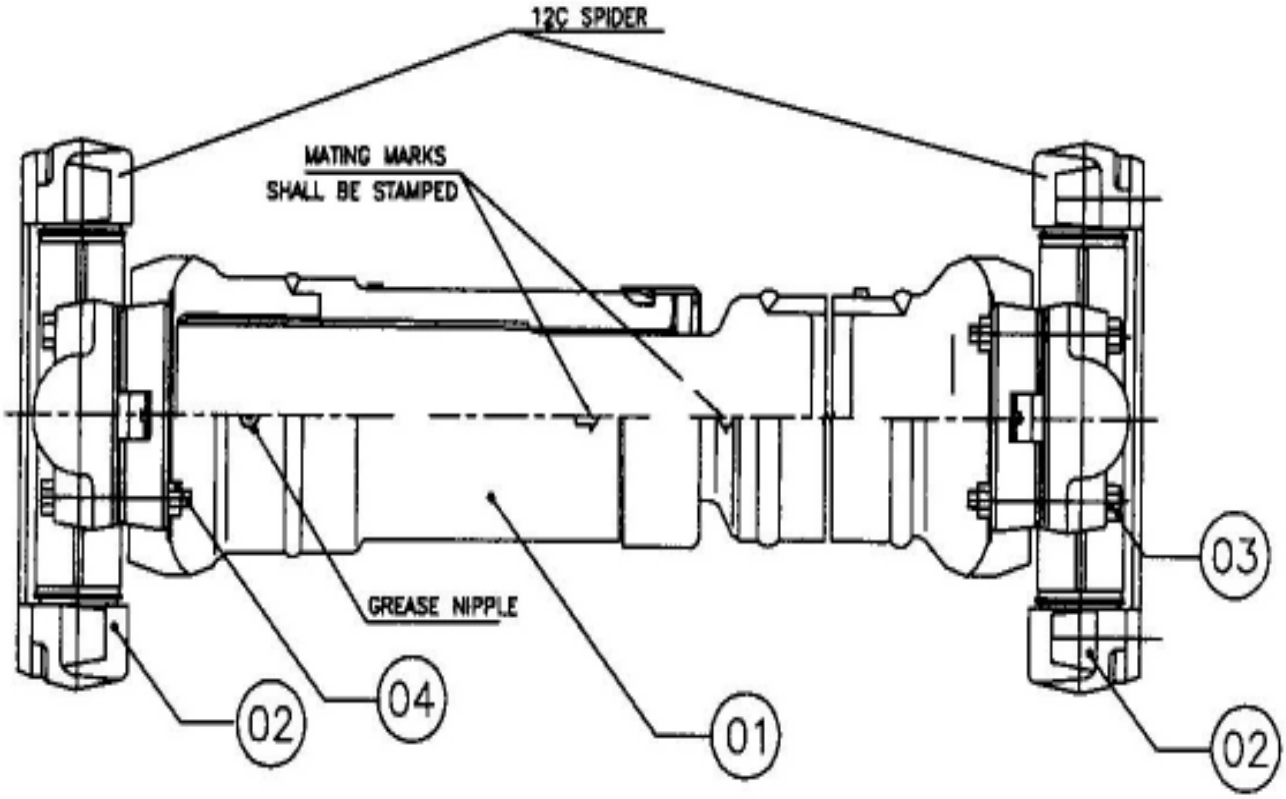

REAR PROPELLER SHAFT ASSY. **FIG NO. 29**

SLNO	PART NUMBER	DESCRIPTION	QTY	REMARKS
	953-PD-01067	PROPELLER SHAFT (FRONT)	1	
	953-PD-02039	REAR PROPELLER SHAFT (SPICER)	1	
01	953-PI-11035	TUBE ASSY	1	
02	953-PD-02103	SPIDER ASSY (MODIFIED)	2	
03	953-PI-11116	HEX. BOLT	8	
04	CFN19-01411	HEX. NUT	8	

FIG. 30 REAR PROPELLER SHAFT GUARD INST.

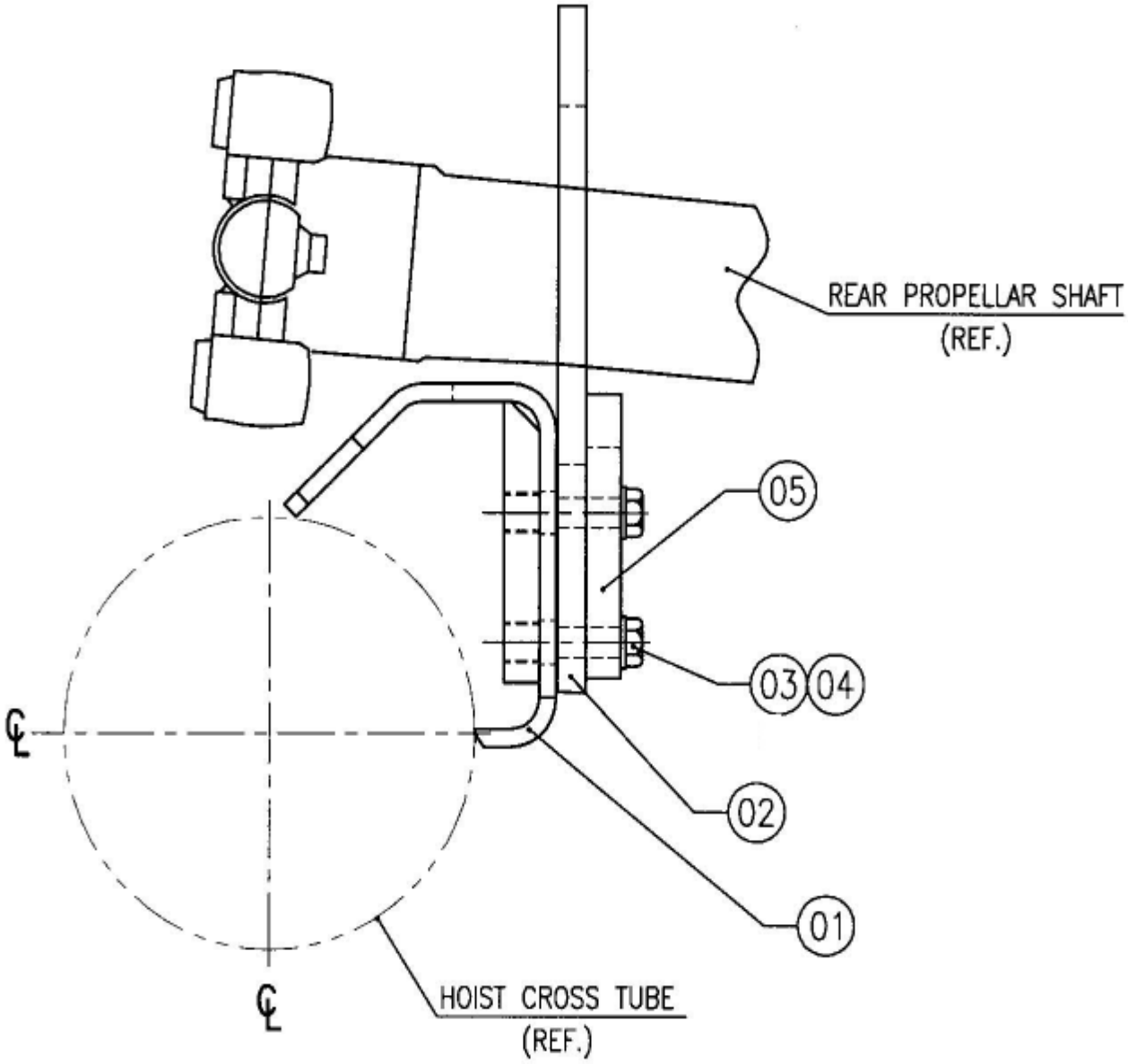

REAR PROPELLER SHAFT GUARD INST.

FIG NO. 30

SLNO	PART NUMBER	DESCRIPTION	QTY	REMARKS
01	953-FG-01024	BRACKET	1	
02	985-PZ-11207	GUARD	1	
03	CFB01-22495	HEX. BOLT	8	
04	CFW05-24060	WASHER	8	
05	985-PZ-11215	PLATE	1	

FIG. 31 TRANSMISSION MOUNTING

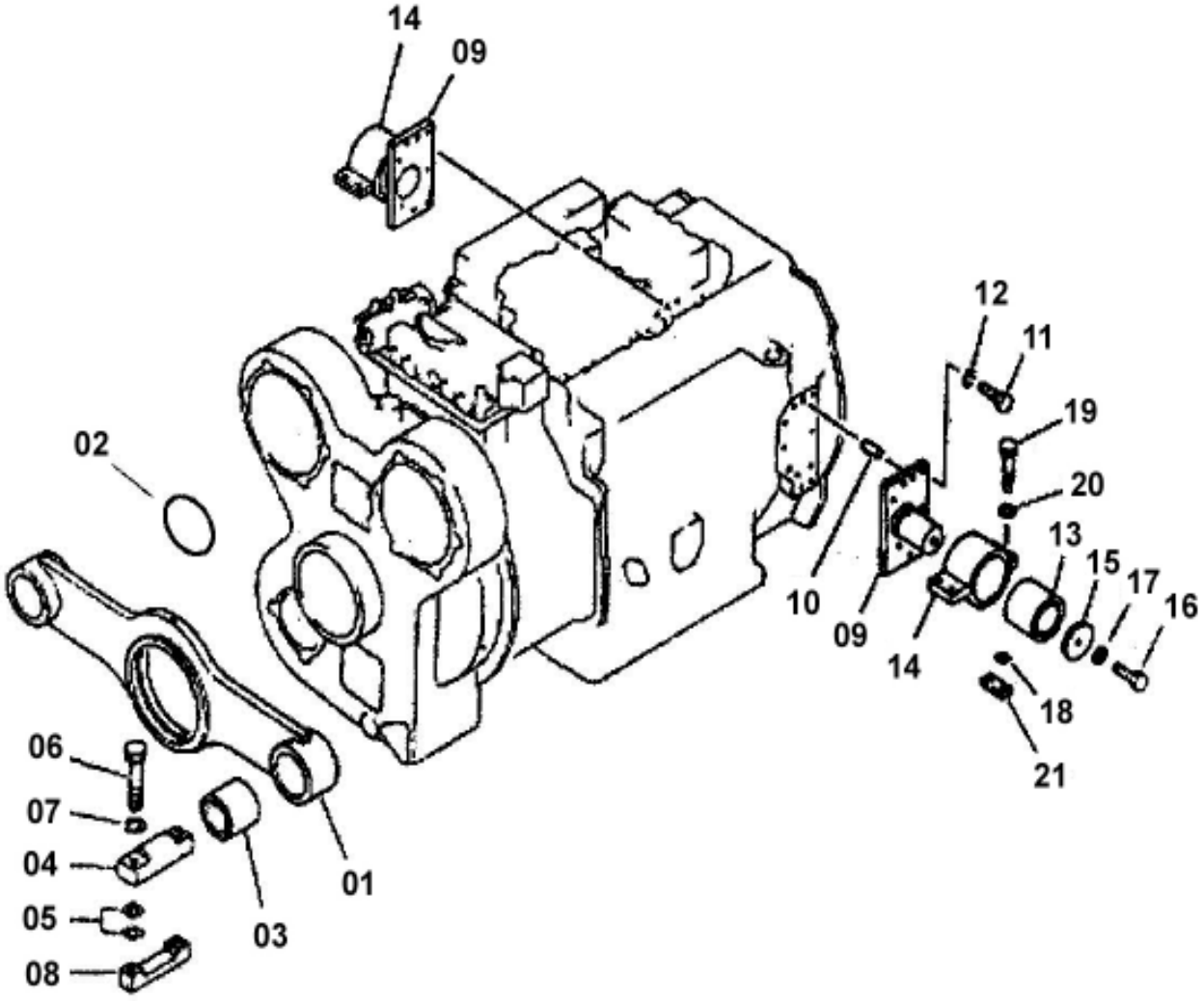

SLNO	PART NUMBER		DESCRIPTION	QTY	REMARKS
	953-TM-02013		TRANSMISSION ASSY		
01	985-PI-03012	**	TRUNNION	1	
02	985-PI-61203	**	BUSHING	1	
03	985-PI-61017	**	CUSHION	2	
04	985-PI-11023	**	PIN	2	
05	985-PI-11031	**	SHIM,1.0mm	4	
05	985-PI-11048	**	SHIM,0.5mm	8	
06	CFB01-52095	**	BOLT	4	
07	CFW05-32060	**	WASHER	4	
08	985-PI-03061	**	PLATE	2	
09	985-PI-03037	**	PIN,RH	1	
09	985-PI-03029	**	PIN,LH	1	
10	04020-01842	**	PIN,DOWEL	2	
11	CFS01-31640	**	HEX. SCREW	14	
12	CFW01-11648	**	SPRING WASHER	14	
13	985-PI-61017	**	CUSHION	2	
14	985-PI-11056	**	BRACKET	2	
15	985-EC-11133	**	WASHER	2	
16	CFS01-31630	**	HEX. SCREW	2	
17	CFW05-31645	**	WASHER	2	
18	985-PI-11072	**	SHIM,0.5mm	16	
19	CFB01-21665	**	BOLT	8	
20	CFW05-31645	**	WASHER	8	
21	985-PI-11089	**	PLATE	4	

FIG. 32 TORQUE CONVERTER CASE (1/2)

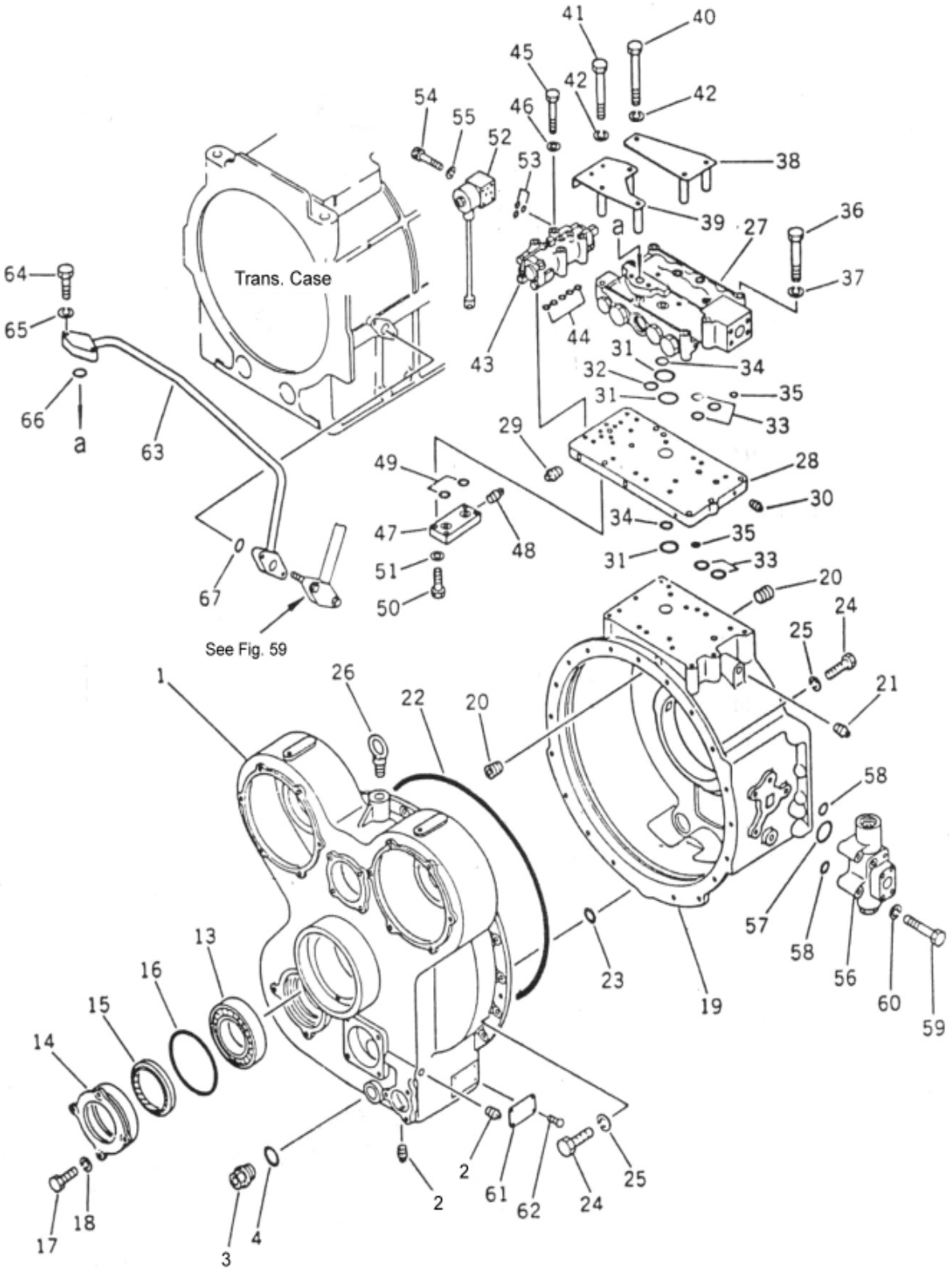

SLNO	PART NUMBER		DESCRIPTION	QTY	REMARKS
	953-TMB-0011		TORQ.FLOW ASSY	1	
	953-TC-01006	*	TORQUE FLOW COVERTOR ASSY	1	
	985-TC-02056	**	HOUSING ASSY	1	
01	985-TC-41617	**	HOUSING	1	
02	07042-20415	***	PLUG	2	
03	CPL03-13620	**	PLUG	1	
04	CHS03-33634	**	O-RING (KIT)	1	
13	985-TC-91935	**	BEARING	1	
14	985-TC-41228	**	RETAINER	1	
15	CHS07-10110	**	SEAL OIL (KIT)	1	
16	CHS01-05150	**	O-RING (KIT)	1	
17	CFB01-21030	**	HEX. BOLT	2	
18	CFW01-11030	**	WASHER,SPRING	2	
19	985-TC-02064	**	HOUSING ASSY	1	
19	985-TC-41593	***	HOUSING	1	
20	CPL02-11726	***	PLUG	6	
21	CPL01-11521	***	PLUG	1	
22	985-TC-61065	**	O-RING	1	
23	CHS01-13040	**	O-RING (KIT)	1	
24	CFB07-21440	**	HEX. BOLT	19	
25	CFW01-11442	**	WASHER SPRING	19	
26	CFB23-12027	**	BOLT EYE	1	
27	985-CV-01015	**	VALVE ASSY	1	
28	985-TC-11606	**	SEAT	1	
29	CPL01-11113	**	PLUG	5	
30	CPL01-10810	**	PLUG	6	
31	CHS01-73040	**	O-RING (KIT)	3	
32	CHS01-73035	**	O-RING (KIT)	1	
33	CHS01-73028	**	O-RING (KIT)	5	
34	CHS01-72020	**	O-RING (KIT)	2	
35	CHS01-72014	**	O-RING (KIT)	13	
36	CFB02-21215	**	HEX. BOLT	5	
37	CFW01-11236	**	WASHER,SPRING	5	
43	985-CV-01023	**	VALVE ASSY (LOCK-UP)	1	
44	CHS01-72016	**	O-RING (KIT)	5	
45	CFB01-21085	**	HEX. BOLT	4	

FIG. 32 TORQUE CONVERTER CASE (1/2)

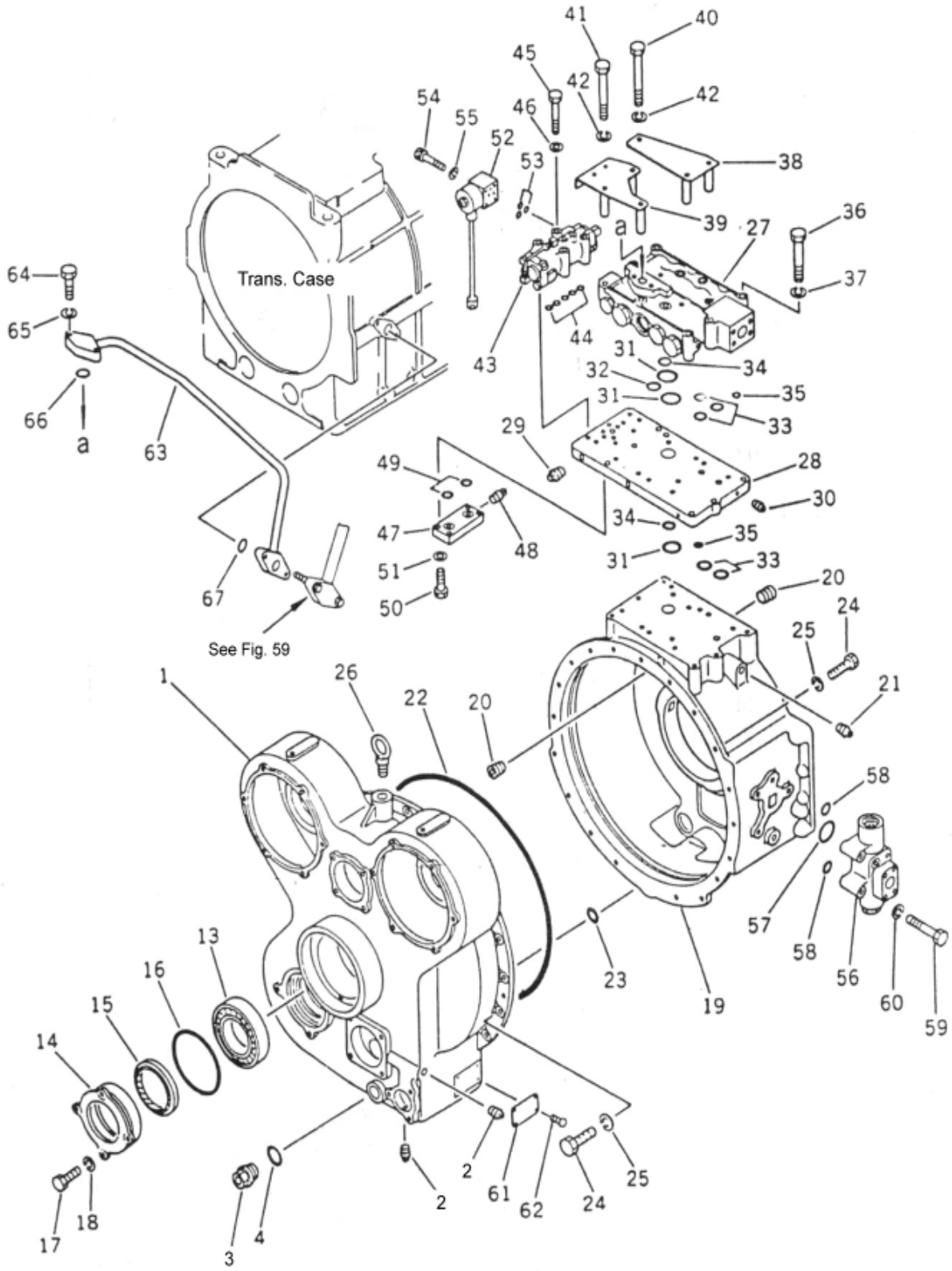

SLNO	PART NUMBER	DESCRIPTION	QTY	REMARKS
46	CFW05-10032	** WASHER	4	
47	985-TC-11396	** PLATE	1	
48	CPL01-11113	** PLUG	1	
49	CHS01-72016	** O-RING (KIT)	2	
50	CFB01-21040	** HEX. BOLT	4	
51	CFW05-10032	** WASHER	4	
52	985-TC-91668	** SOLENOID VALVE	1	
53	CHS01-F1006	** O-RING (KIT)	3	
54	CFS13-40550	** SCREW	4	
55	CFW01-10513	** WASHER,SPRING	4	
56	985-CV-01007	** VALVE ASSY, REGULATOR	1	
57	CHS01-73042	** O-RING (KIT)	1	
58	CHS01-72018	** O-RING (KIT)	2	
59	CFB01-21285	** HEX. BOLT	3	
60	CFW01-11236	** WASHER, SPRING	3	
61	985-TC-21707	** PLATE, NAME	1	
62	CFS33-03060	** SCREW	4	
63	710-10-18310	* TUBE WITH FLANGE	1	
64	CFB01-21055	* BOLT	2	
65	CFW01-11030	* WASHER,SPRING	2	
66	CHS01-73025	* O-RING (KIT)	1	
67	CHS01-73035	* O-RING (KIT)	1	

FIG. 33 TORQUE CONVERTER CASE (2/2)

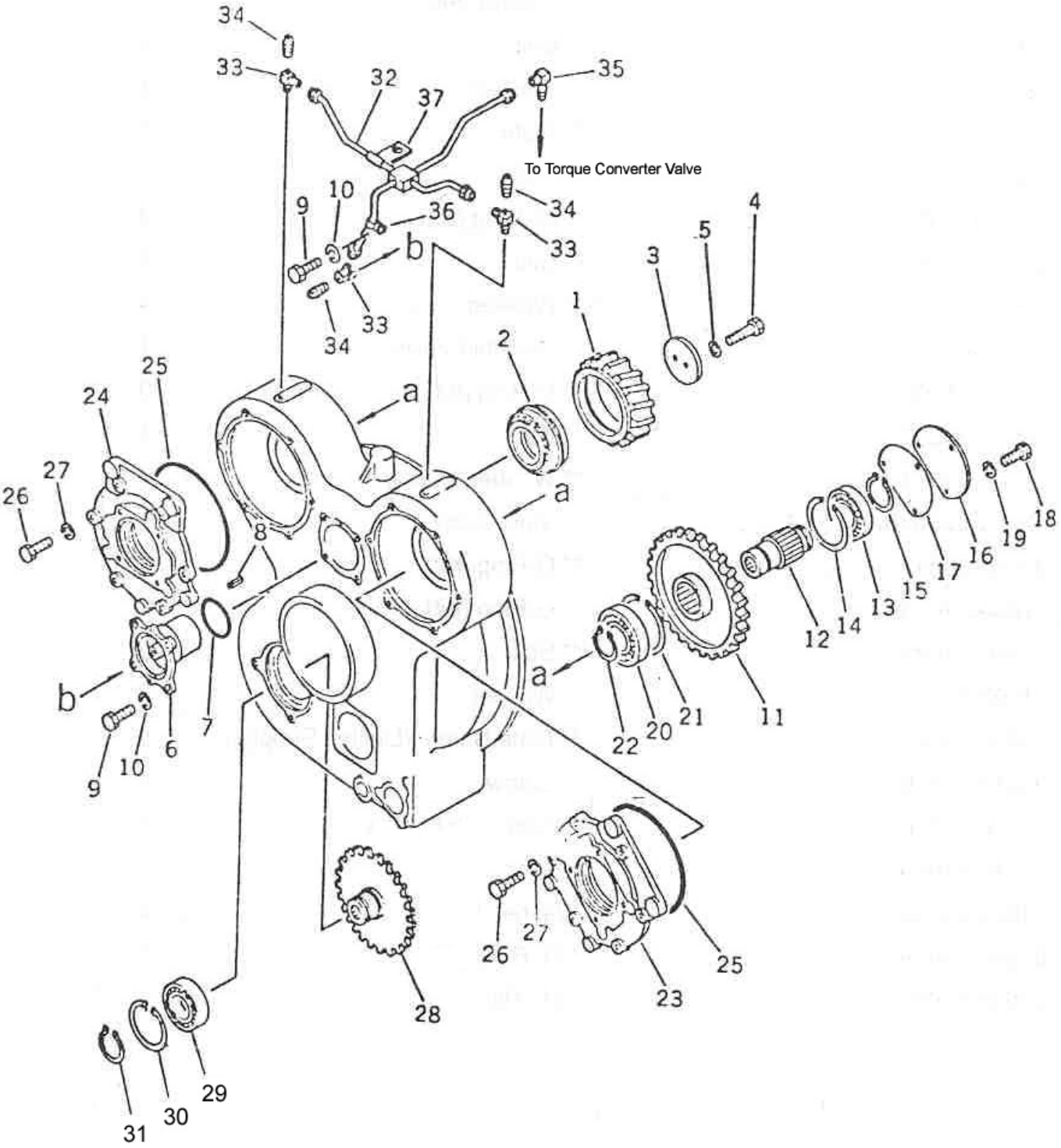

SLNO	PART NUMBER		DESCRIPTION	QTY	REMARKS
	953-TMB-0011		TORQUE FLOW COVERTOR ASSY	1	
	953-TC-01006	*	TORQUE CONVERTOR ASSY	1	
01	985-TC-51101	**	GEAR	1	
02	985-TC-91279	**	BEARING	1	
03	985-TC-11241	**	PLATE	1	
04	CFB01-21265	**	HEX. BOLT	2	
05	CFW05-12032	**	WASHER	2	
06	985-TC-41236	**	SHAFT	1	
07	CHS01-E2095	**	O-RING (KIT)	1	
08	CFP13-06024	**	PIN,SPRING	1	
09	CFS01-31230	**	SCREW	4	
10	CFW01-11236	**	WASHER,SPRING	4	
11	985-TC-51118	**	GEAR	2	
12	985-TC-51653	**	SHAFT	2	
13	985-TC-91051	*	BEARING	2	
14	CFL04-10110	**	RING,SNAP	2	
15	CFL01-16020	**	RING,SNAP	2	
16	985-TC-11258	**	PLATE	2	
17	985-TC-71263	**	GASKET (KIT)	2	
18	CFS01-31025	**	SCREW	6	
19	CFW01-11030	**	WASHER,SPRING	6	
20	CBB30-06311	**	BEARING	2	
21	CFL04-10120	**	RING,SNAP	2	
22	CFL01-15520	**	RING,SNAP	2	
23	985-TC-41641	**	COVER	1	
24	985-TC-41633	**	COVER	1	
25	CHS01-E5230	**	O-RING (KIT)	2	
26	CFS01-31230	**	SCREW	12	
27	CFW01-11236	**	WASHER,SPRING	12	
28	985-TC-51629	**	GEAR	1	
29	CBB30-05211	**	BEARING	1	
30	CFL02-11030	**	RING,SNAP	1	
31	CFL01-15520	**	RING,SNAP	1	
32	985-TC-02023	**	TUBE	1	

FIG. 33 TORQUE CONVERTER CASE (2/2)

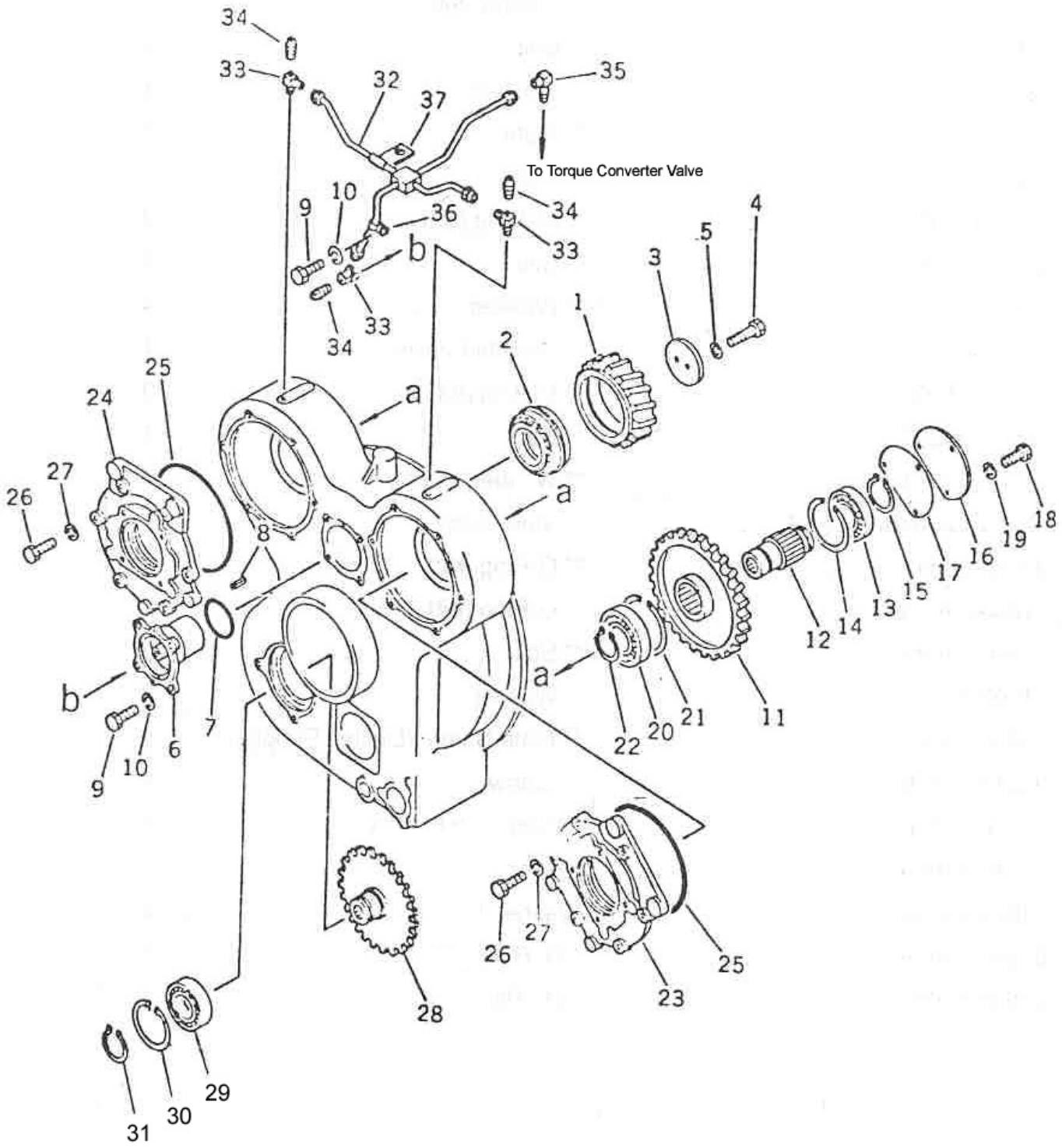

SLNO	PART NUMBER	DESCRIPTION	QTY	REMARKS
33	985-TC-11671	** ELBOW	3	
34	CPL01-10810	** PLUG	3	
35	985-TC-51312	** ELBOW	1	
36	985-TC-11339	** CLIP	1	
37	985-TC-11322	** CLIP	1	

FIG. 34 TORQUE CONVERTER

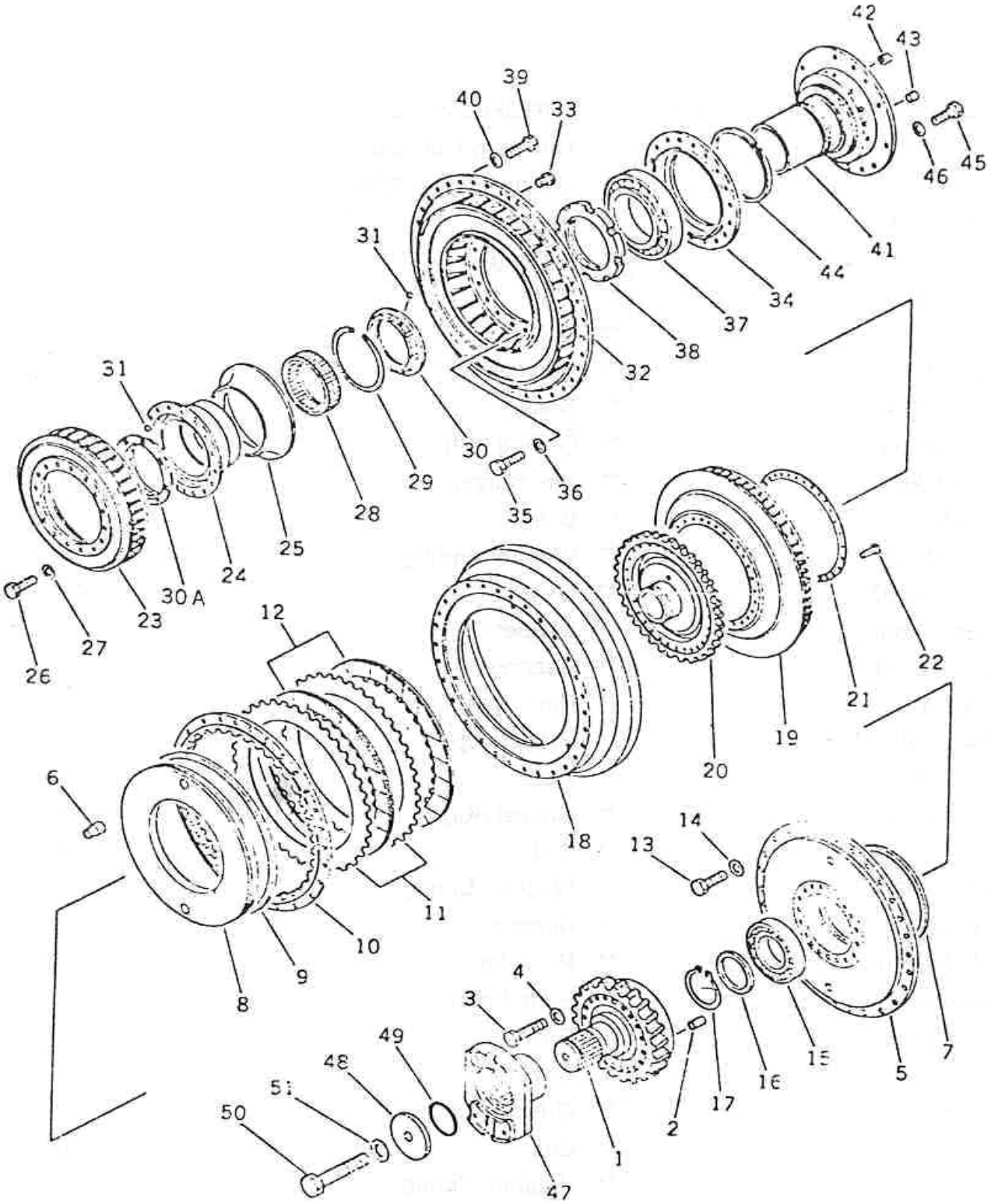

SLNO	PART NUMBER		DESCRIPTION	QTY	REMARKS
	953-TMB-0011		TORQUE FLOW CONVERTOR ASSY	1	
	953-TC-01006	*	TORQUE CONVERTOR ASSY	1	
01	985-TC-51515	**	SHAFT	1	
02	CFP04-01842	**	PIN,DOWEL	2	
03	CFB07-21495	**	BOLT	16	
04	CFW05-14045	**	WASHER	16	
05	985-TC-02082	**	HOUSING ASSY	1	
05	985-TC-31484	***	HOUSING	1	
06	985-TC-11185	***	PIN	2	
07	985-TC-41017	**	SEAL,RING	1	
08	985-TC-41358	**	PISTON	1	
09	985-TC-41025	**	SEAL,RING	1	
10	985-TC-51345	**	GEAR	1	
11	125-TM-13777	**	PLATE	2	
12	985-TC-91002	**	DISC	2	
13	CFB01-21255	**	BOLT	30	
14	CFW05-12032	**	WASHER	30	
15	985-TC-91368	**	BEARING	1	
16	985-TC-11071	**	PLATE	1	
17	CFL01-18530	**	RING,SNAP	1	
18	985-TC-41196	**	CASE	1	
19	985-TC-02031	**	TURBINE ASSY	1	
20	985-TC-51459	***	BOSS	1	
21	985-TC-11469	***	PLATE	1	
22	985-TC-11371	***	RIVET	30	
23	985-TC-21204	**	STATOR	1	
24	985-TC-02048	**	RACE ASSY	1	
24	985-TC-51548	***	RACE	1	
25	985-TC-41552	***	GUIDE	1	
26	CFS01-31225	**	SCREW	16	
27	CFW05-12032	**	WASHER	16	
28	985-TC-91562	**	WHEEL FREE	1	
29	CFL06-10140	**	RING,SNAP	1	
30	985-TC-21083	**	BUSHING	1	
30A	985-TC-21472	**	BUSHING	1	

FIG. 34 TORQUE CONVERTER

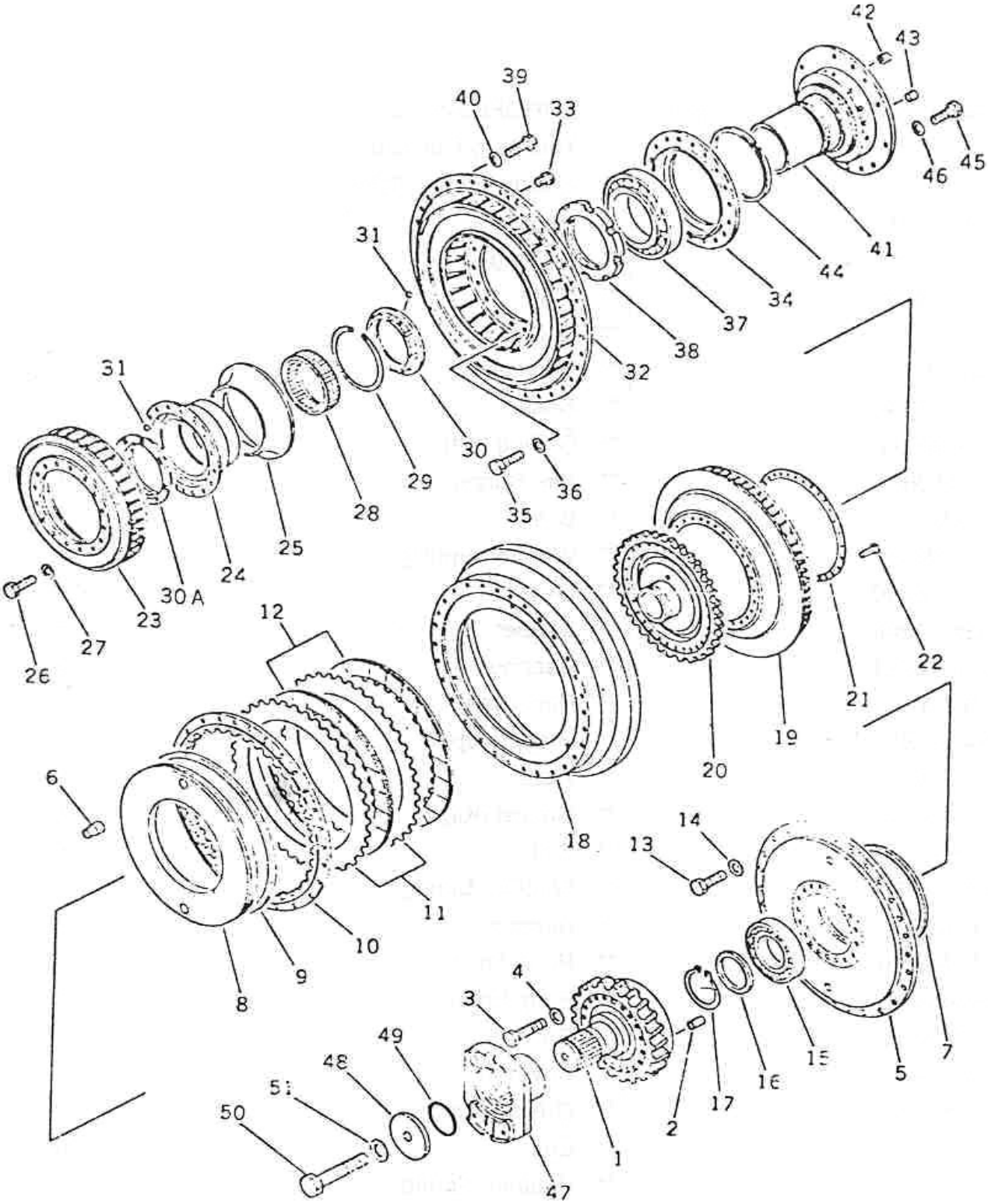

SLNO	PART NUMBER	DESCRIPTION	QTY	REMARKS
31	CBZ01-00635	** BALL	2	
32	985-TC-21497	** PUMP	1	
33	CPL06-11209	** PLUG	2	
34	985-TC-51507	** RETAINER	1	
35	CFB01-21040	** BOLT	18	
36	CFW05-10032	** WASHER	18	
37	CBT02-32036	** BEARING	1	
38	985-TC-11217	** NUT	1	
39	CFB01-21035	** BOLT	36	
40	CFW05-10032	** WASHER	36	
41	985-TC-02099	** SHAFT ASSY	1	
41	985-TC-51572	*** SHAFT	1	
42	985-TC-11582	*** PLUG	3	
43		*** PLUG	2	
44	985-TC-71093	** SEAL,RING	1	
45	CFS01-31230	** SCREW	12	
46	CFW05-12032	** WASHER	12	
47	953-TC-52029	** FLANGE	1	
48	985-TC-11533	** HOLDER	1	
49	CHS01-15075	** O-RING	1	
50	CFB01-22090	** BOLT	1	
51	CFW05-20060	** WASHER	1	
	953-ZZ-00131	TORQUE CONVERTOR SEAL KIT		
	953-ZZ-00107	T.C. COMPLETE SERVICE KIT		

FIG. 35 TORQUE CONVERTER VALVE (1/2)

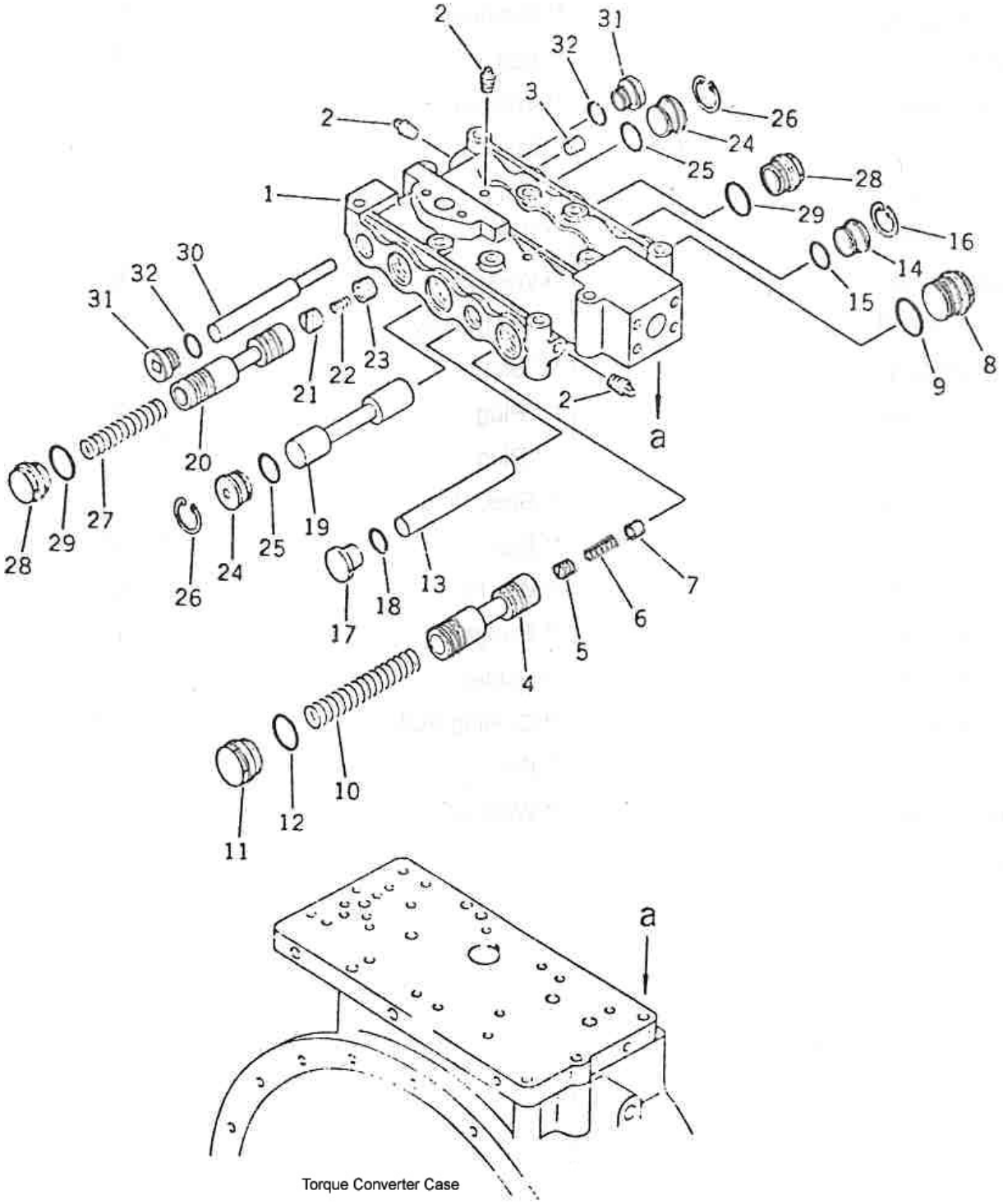

SLNO	PART NUMBER		DESCRIPTION	QTY	REMARKS
	953-TMB-0011		TORQ.FLOW ASSY		
	953-TC-01006	*	TORQUE FLOW CONVERTOR ASSY	1	
01	985-CV-01015	**	MAIN RELIEF VALVE ASSY	1	
01	985-CV-41135	***	VALVE BODY	1	
02	CPL01-20810	***	PLUG	6	
03	CPL02-10810	***	PLUG	1	
04	985-CV-11149	***	SPOOL	1	
05	125-CV-11672	***	VALVE	1	
06	113-TM-12316	***	SPRING	1	
07	125-CV-11283	**	VALVE	1	
08	985-CV-11108	***	PLUG	1	
09	CHS01-E3038	***	O-RING (KIT)	1	
10	985-CV-11092	***	SPRING	1	
11	985-CV-11205	***	PLUG	1	
12	CHS03-E3634	***	O-RING (KIT)	1	
13	985-CV-11157	***	SPOOL	1	
14	985-CV-11124	***	STOPPER	1	
15	CHS01-73022	***	O-RING (KIT)	1	
16	CFL02-13212	***	RING, SNAP	1	
17	985-CV-11181	***	PLUG	1	
18	CHS03-E2434	***	O-RING (KIT)	1	
19	985-CV-11198	***	SPOOL	1	
20	985-CV-11165	***	SPOOL	1	
21	985-CV-11068	***	VALVE	1	
22	113-TM-12316	***	SPRING	1	
23	985-CV-11071	***	VALVE	1	
24	985-CV-11084	***	STOPPER	2	
25	CHS01-E3030	***	O-RING (KIT)	2	
26	CFL02-14018	***	RING, SNAP	2	
27	985-CV-11116	***	SPRING	1	
28	985-CV-11213	***	PLUG	2	
29	CHS03-E3634	***	O-RING (KIT)	2	
30	985-CV-11173	***	SPOOL	1	
31	CPL06-12412	***	PLUG	2	
32	CHS03-E2434	***	O-RING (KIT)	2	

FIG. 36 TORQUE CONVERTER VALVE (2/2)

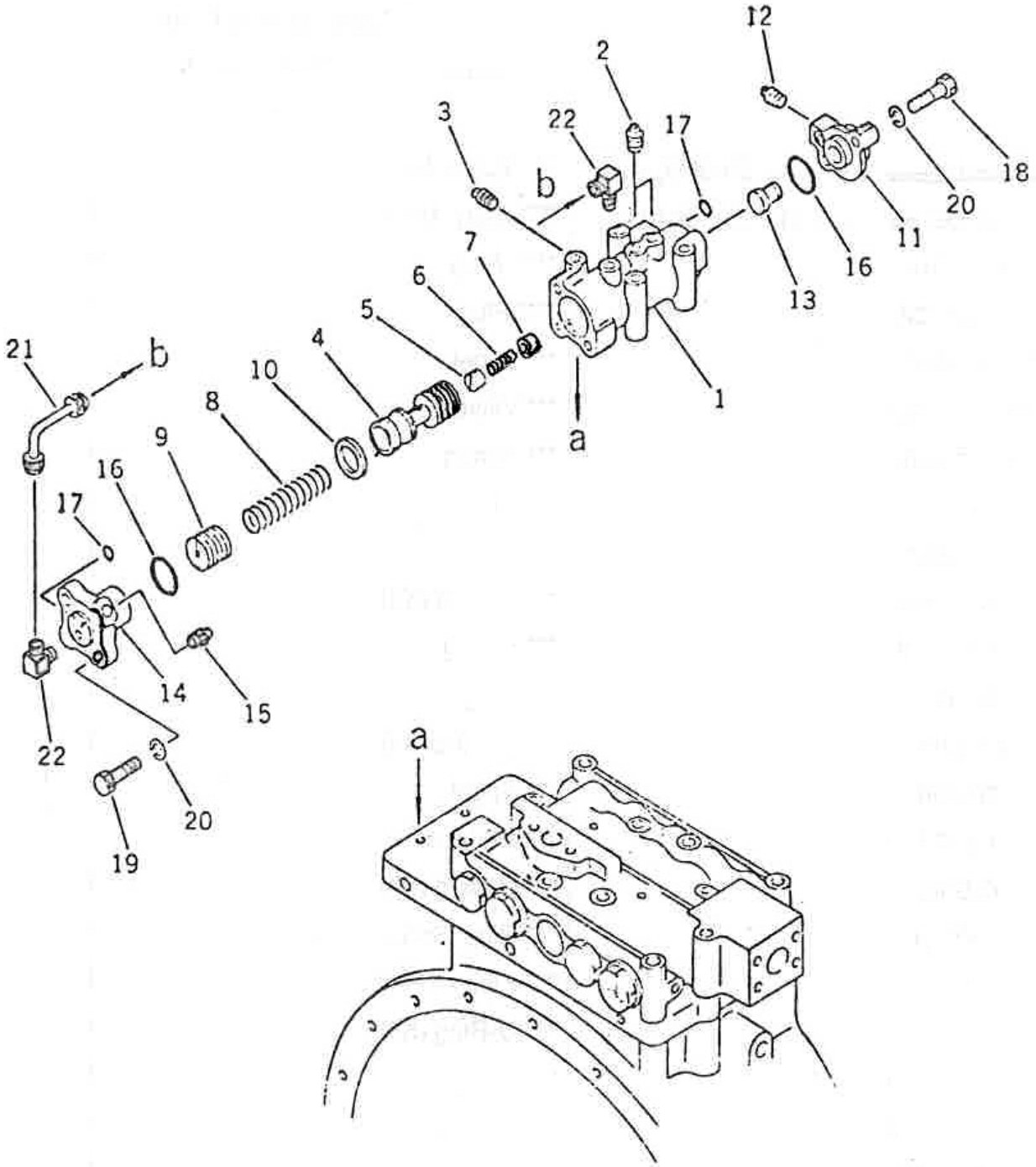

SLNO	PART NUMBER		DESCRIPTION	QTY	REMARKS
	953-TMB-0011		TORQUE FLOW ASSY		
	953-TC-01006	*	TORQUE CONVERTOR ASSY	1	
01	985-CV-01023	**	LOCK-UP VALVE ASSY	1	
01	985-CV-02125	***	BODY ASSY	1	
	985-CV-41273	***	BODY	1	
02	CPL01-20810	***	PLUG	2	
03	CPL02-10810	***	PLUG	1	
04	985-CV-11327	***	SPOOL	1	
05	125-CV-11704	***	VALVE	1	
06	985-CV-11238	***	SPRING	1	
07	125-CV-11283	***	VALVE	1	
08	985-CV-11262	***	SPRING	1	
09	985-CV-11246	***	PISTON	1	
10	985-CV-11254	***	RING	1	
11	985-CV-41298	***	COVER	1	
12	CPL01-20810	***	PLUG	1	
13	985-CV-11281	***	PISTON	1	
14	985-CV-41305	***	COVER	1	
15	CPL01-20810	***	PLUG	1	
16	CHS01-73038	***	O-RING (KIT)	2	
17	CHS01-72010	***	O-RING (KIT)	2	
18	CFB01-21045	***	BOLT	2	
19	CFB01-21035	***	BOLT	2	
20	CFW01-11030	***	WASHER, SPRING	4	
21	985-CV-02003	***	TUBE	1	
22	985-CV-11221	***	ELBOW	2	
	953-ZZ-00164		LOCKUP VALVE SEAL KIT		

FIG. 37 TORQUE CONVERTER LUBRICATING VALVE

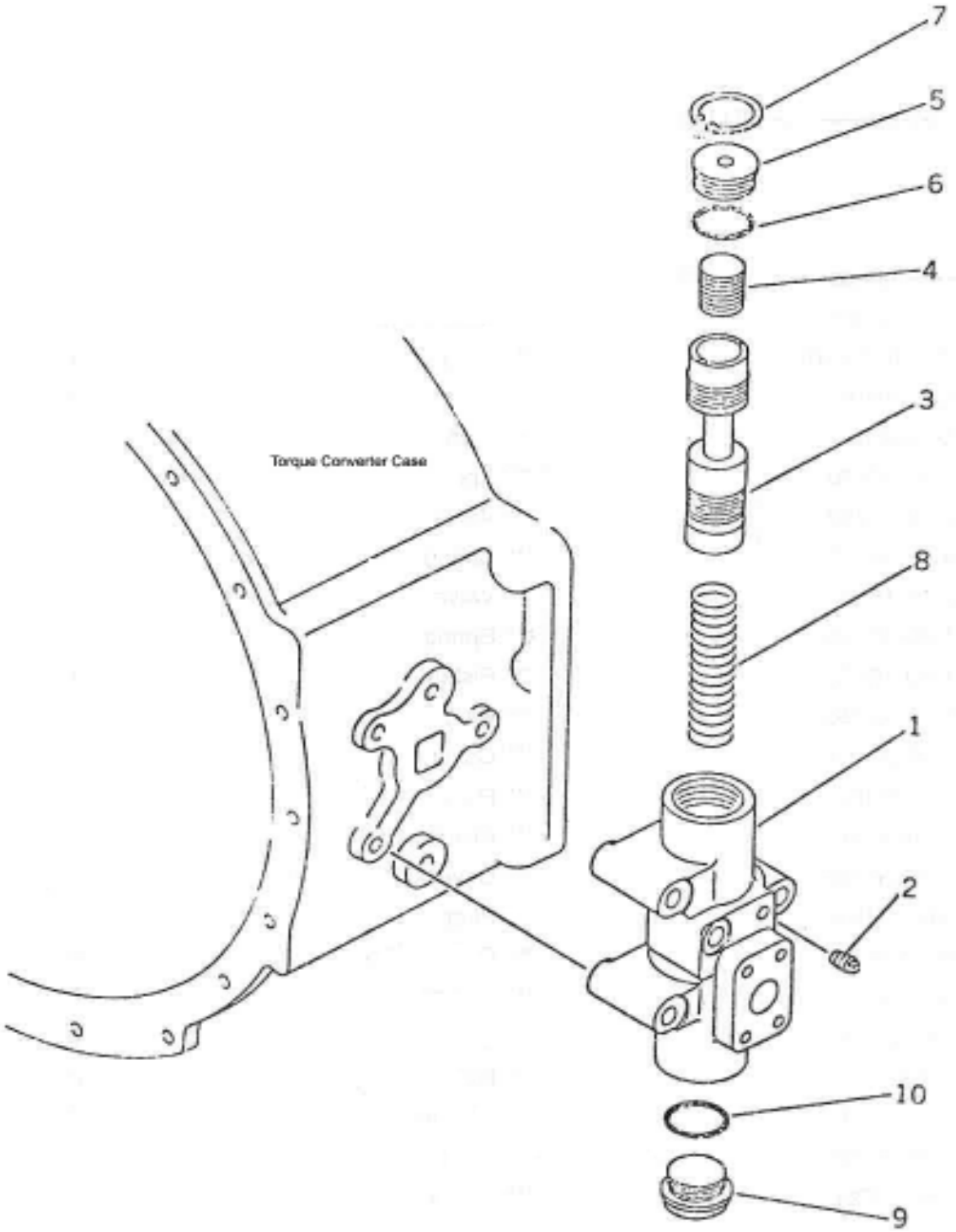

SLNO	PART NUMBER		DESCRIPTION	QTY	REMARKS
	953-TMB-0011		TORQ.FLOW ASSY		
	953-TC-01006	*	TORQUE CONVERTOR ASSY	1	
01	985-CV-01007	**	REGULATOR VALVE ASSY	1	
01	985-CV-41013	***	BODY	1	
02	CPL01-20810	***	PLUG	1	
03	985-CV-11027	***	SPOOL	1	
04	985-CV-11035	***	PISTON	1	
05	985-CV-11051	***	STOPPER	1	
06	CHS01-E3035	***	O-RING	1	
07	CFL02-14518	***	SNAP RING	1	
08	985-CV-11043	***	SPRING	1	
09	CPL07-14220	***	PLUG	1	
10	CHS03-E4234	***	O-RING	1	
	953-ZZ-00067		REGULATOR VALVE SEAL KIT		

FIG. 38 TRANSMISSION CASE

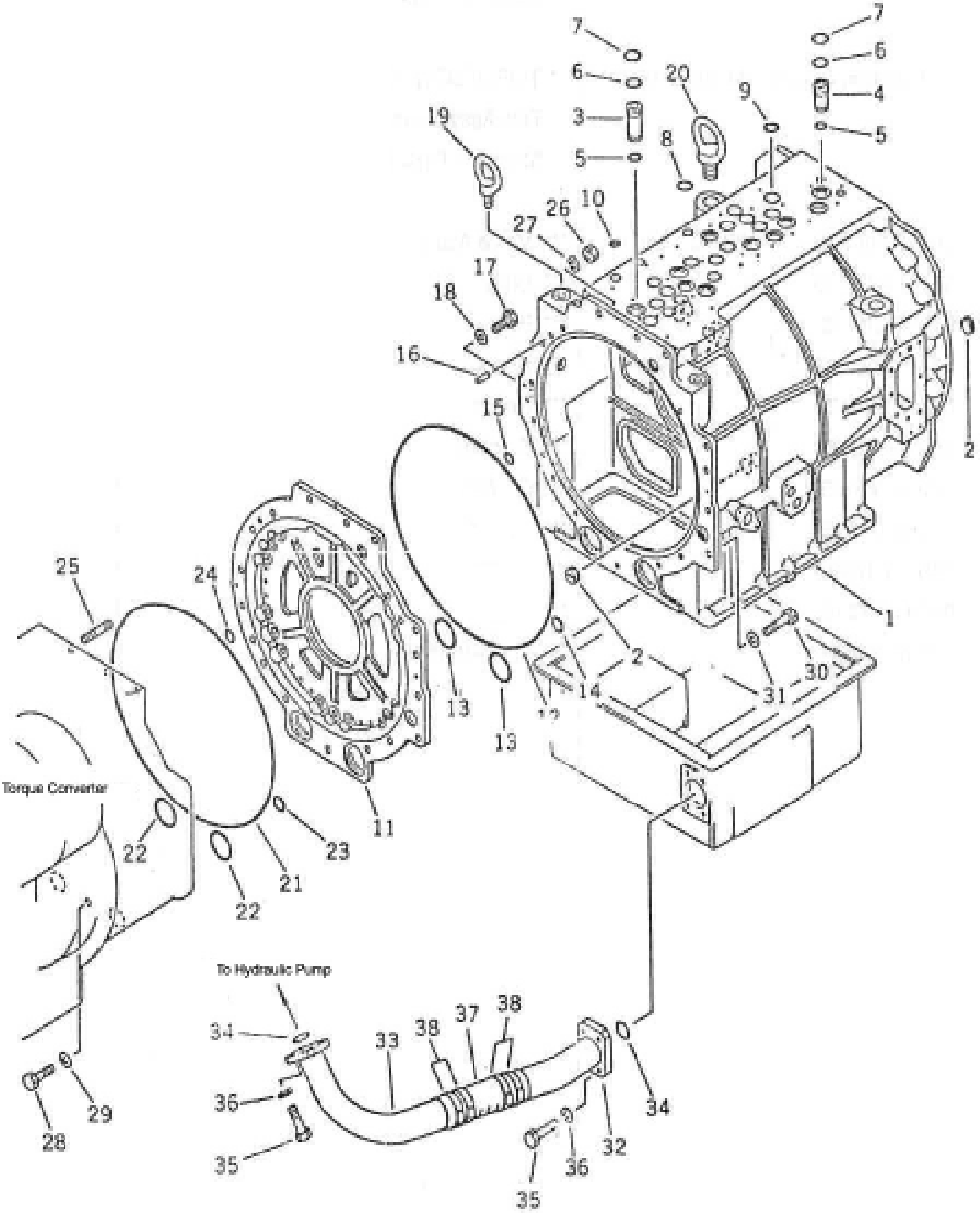

SLNO	PART NUMBER		DESCRIPTION	QTY	REMARKS
	953-TMB-0011		TORQ.FLOW TRANS.ASSY	1	
	953-TM-02013	*	TRANSMISSION ASSY	1	
01	953-TM-43113	**	CASE	1	
02	985-TM-12565	**	PLUG	6	
03	985-TM-11544	**	SLEEVE	1	
04	985-TM-12573	**	SLEEVE	4	
05	CHS01-73022	**	O-RING (KIT)	5	
06	CHS01-73025	**	O-RING (KIT)	5	
07	CHS01-73045	**	O-RING (KIT)	7	
08	CHS01-73035	**	O-RING (KIT)	3	
09	CHS01-73028	**	O-RING (KIT)	19	
10	CHS01-72020	**	O-RING (KIT)	5	
11	953-TM-43179	**	HOUSING	1	
12	985-TM-61092	**	O-RING (KIT)	1	
13	CHS01-12065	**	O-RING (KIT)	2	
14	CHS01-73035	**	O-RING (KIT)	2	
15	CHS01-73028	**	O-RING (KIT)	1	
16	CFP04-01434	**	PIN DOWEL	1	
17	CFS01-31230	**	BOLT	2	
18	CFW05-12032	**	WASHER	2	
19	CFB23-12431	**	BOLT EYE	2	
20	CFB23-13039	**	BOLT EYE	2	
21	985-TM-61092	**	O-RING (KIT)	1	
22	CHS01-12065	**	O-RING (KIT)	2	
23	CHS01-73035	**	O-RING (KIT)	1	
24	CHS01-73028	**	O-RING (KIT)	1	
25	CFT05-21650	**	STUD	3	
26	CFN01-21615	**	NUT	3	
27	CFW01-11648	**	WASHER,SPRING	3	
28	CFB01-21655	**	BOLT	10	
29	CFW05-16045	**	WASHER	10	
30	CFB01-21655	**	BOLT	4	
31	CFW05-16045	**	WASHER	4	
32	985-ZZ-10837	**	TUBE	1	
33	985-ZZ-10845	**	TUBE	1	
34	CHS01-72075	**	O-RING (KIT)	2	
35	CFB01-21240	**	BOLT	8	

FIG. 38 TRANSMISSION CASE

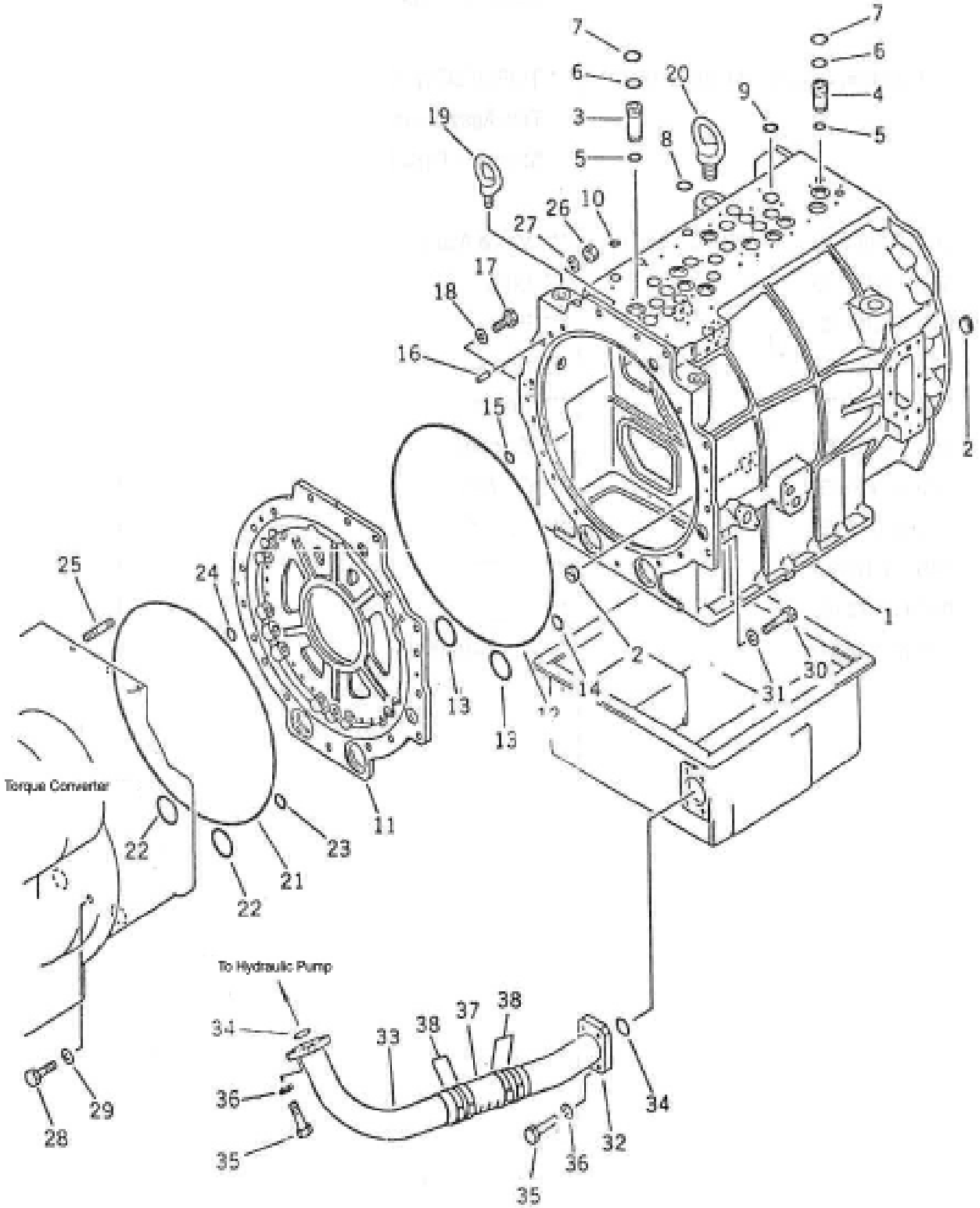

SLNO	PART NUMBER	DESCRIPTION	QTY	REMARKS
36	CFW01-11236	** WASHER,SPRING	8	
37	CHH30-27422	** HOSE	1	
38	953-HS-03175	** CLAMP	2	
	953-ZZ-00123	TRANSMISSION SEAT KIT		
	953-ZZ-00115	TRANSMISSION COMPLETE SERVICE KIT		
	953-ZZ-00148	T.C. VALVE SEAL KIT		

FIG. 39 TRANSMISSION OIL PAN AND FILLER

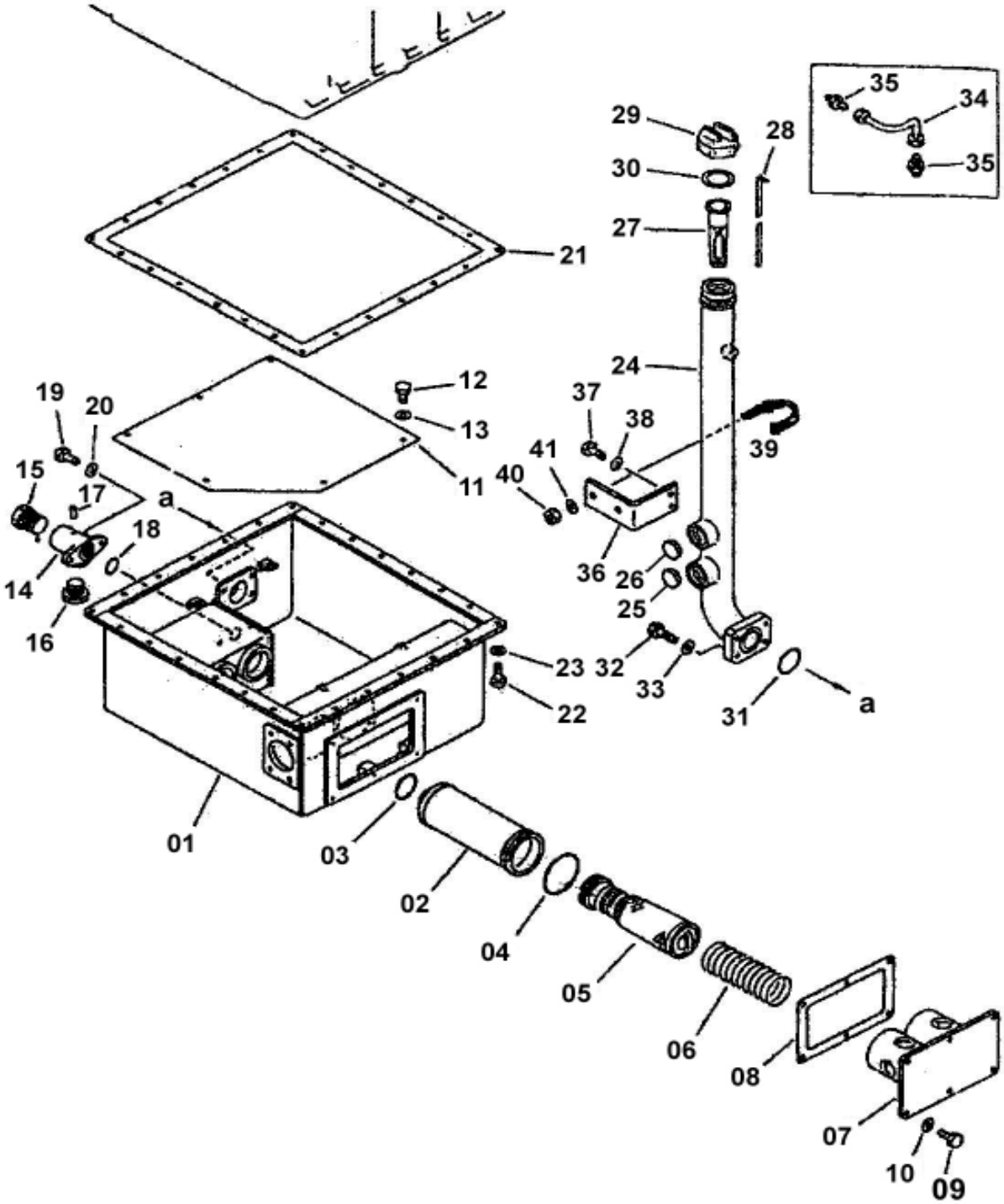

SLNO	PART NUMBER		DESCRIPTION	QTY	REMARKS
	953-TMB-0011		TORQ.FLOW ASSY		
	953-TM-02013	*	TRANSMISSION ASSY	1	
01	985-TM-02034	**	PAN,OIL	1	
02	985-TM-02075	**	CASE	2	
03	CHS01-12055	**	O-RING (KIT)	2	
04	CHS01-12090	**	O-RING (KIT)	2	
05	985-TM-02001	**	MAGNET ASSY	2	
06	985-TM-12492	**	SPRING	2	
07	985-TM-02026	**	COVER	1	
08	985-TM-72481	**	GASKET (KIT)	1	
09	CFS01-31020	**	SCREW	6	
10	CFW05-10032	**	WASHER	6	
11	985-TM-11755	**	PLATE	1	
12	CFS01-31020	**	BOLT	6	
13	CFW05-10032	**	WASHER	6	
14	985-CV-01048	**	VALVE ASSY	1	
14	985-CV-21388	***	BODY	1	
15	985-CV-11392	***	VALVE	1	
16	985-CV-11408	***	PLUG	1	
17	CFP04-00514	***	PIN,DOWEL	1	
18	CHS01-73035	***	O-RING (KIT)	1	
19	CFS01-31025	**	SCREW	2	
20	CFW05-10032	**	WASHER	2	
21	985-TM-71566	**	GASKET (KIT)	1	
22	CFS01-31030	**	SCREW	26	
23	CFW05-10032	**	WASHER	26	
24	985-TM-02189	**	OIL FILLER ASSY	1	
24	985-TM-02156	***	FILLER ASSY	1	
25	985-TM-02164	***	GAUGE, UPPER	2	
26	985-TM-02172	***	GAUGE, LOWER	2	
27	CHS01-12060	***	O-RING (KIT)	1	
28	985-TM-11382	**	GAUGE	1	
29	CCP02-00000	**	CAP	1	
30	CCP02-00003	***	GASKET	1	
31	CFF01-10045	**	STRAINER(KIT)	1	
32	CFS01-31235	**	SCREW	4	
33	CFW05-12032	**	WASHER	4	

FIG. 39 TRANSMISSION OIL PAN AND FILLER

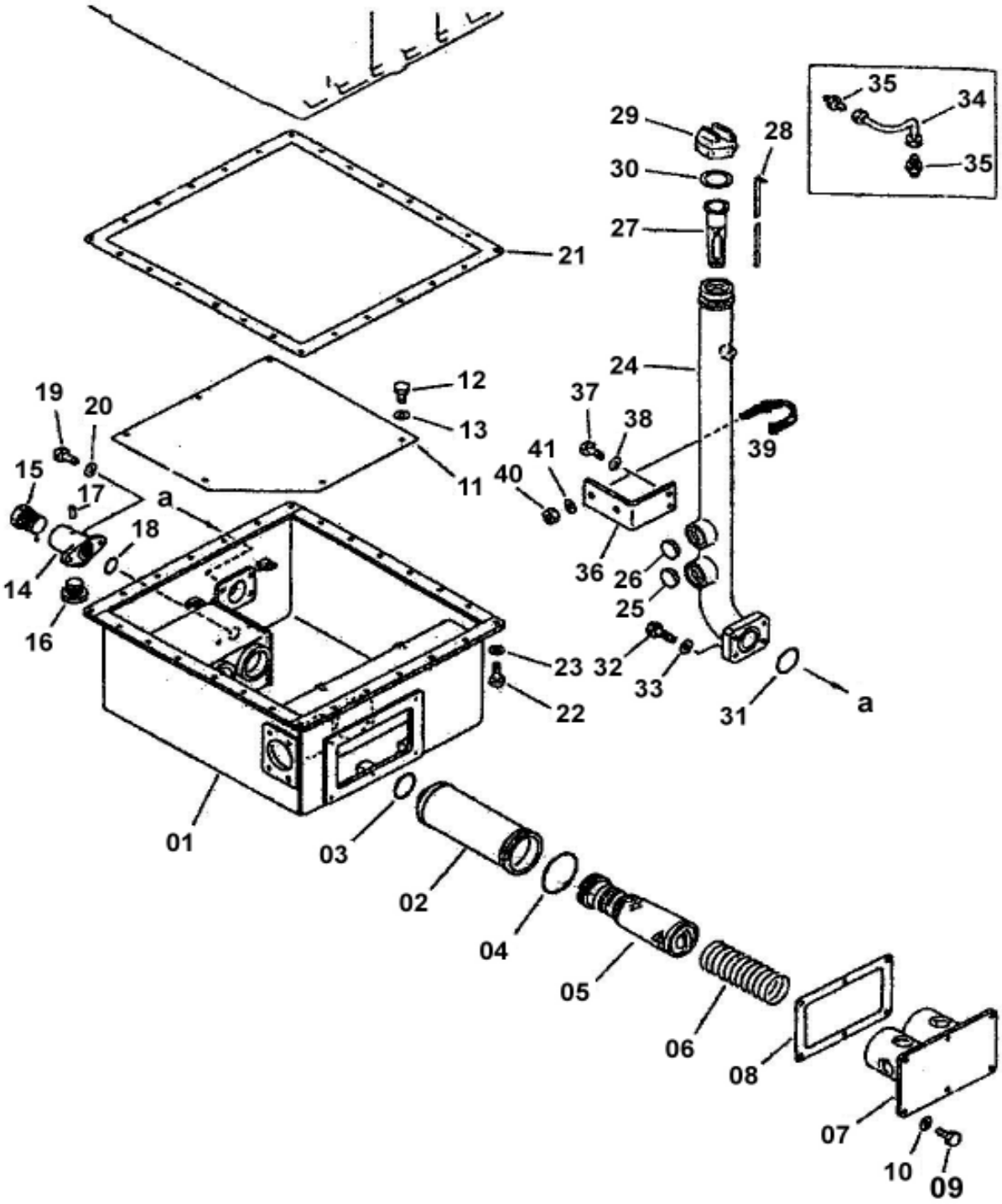

SLNO	PART NUMBER	DESCRIPTION	QTY	REMARKS
34	985-TM-02059	** TUBE	1	
35	CPF05-10813	** CONNECTOR	2	
36	985-TM-11763	** BRACKET	1	
37	CFS01-31025	** SCREW	2	
38	CFW05-10032	** WASHER	2	
39	CCC07-26155	** CLIP	1	
40	CFN28-11011	** NUT	2	
41	CFW05-10032	** WASHER	2	

FIG. 40 LUBRICATING VALVE AND PIPING

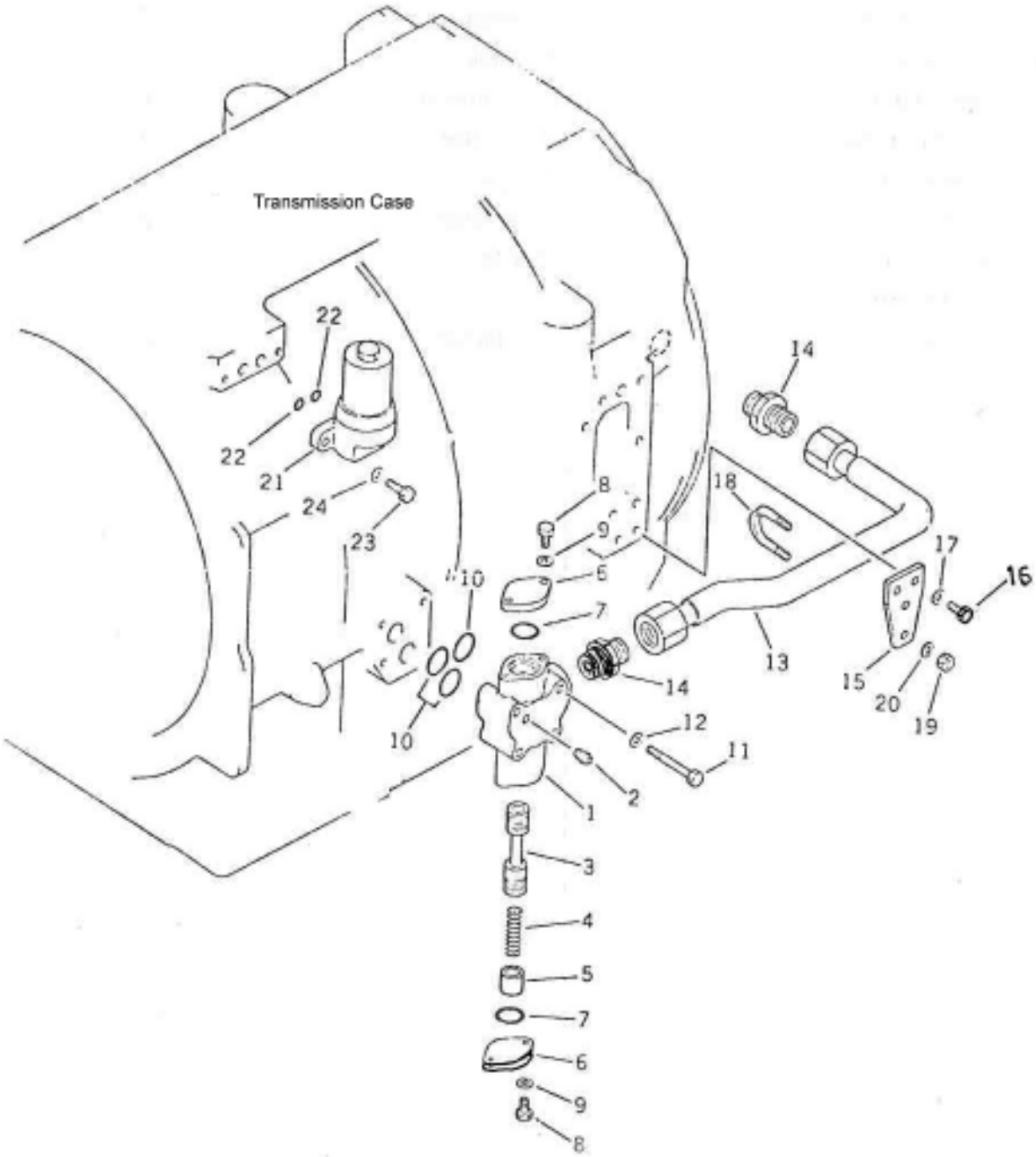

SLNO	PART NUMBER		DESCRIPTION	QTY	REMARKS
	953-TMB-0011		TORQ.FLOW ASSY		
	953-TM-02013	*	TRANSMISSION ASSY.	1	
	985-CV-01031	**	LUB.VALVE ASSY	1	
01	985-CV-41379	***	VALVE BODY	1	
02	CFL01-10810	***	PLUG	1	
03	985-CV-11368	***	VALVE	1	
04	985-CV-11351	***	SPRING	1	
05	985-CV-11343	***	GUIDE	1	
06	113-TM-12073	***	COVER	2	
07	CHS01-73032	***	O-RING (KIT)	2	
08	CFS01-30825	***	SCREW	4	
09	CFW05-08023	***	WASHER	4	
10	CHS01-73035	***	O-RING (KIT)	3	
11	CFB01-21075	***	BOLT	4	
12	CFW05-10032	***	WASHER	4	
13	985-TM-02067	**	TUBE	1	
14	985-TM-12768	**	NIPPLE	2	
15	985-TM-12298	**	BRACKET	1	
16	CFS01-31025	**	SCREW	2	
17	CFW05-10032	**	WASHER	2	
18	CCC07-23442	**	CLIP	1	
19	CFN28-11011	**	NUT	2	
20	CFW05-10032	**	WASHER	2	
21	985-TM-02018	**	FILTER ASSY	1	
	985-TM-91346	***	ELEMENT	1	
	985-TM-91354	***	O-RING	1	
	985-TM-91362	***	RING,BACK-UP	1	
22	CHS01-72014	***	O-RING (KIT)	2	
23	CFB01-21035	**	BOLT	2	
24	CFW05-10032	**	WASHER	2	
	953-ZZ-00083		LUB.VALVE SEAL KIT		

FIG. 41 HIGH CLUTCH

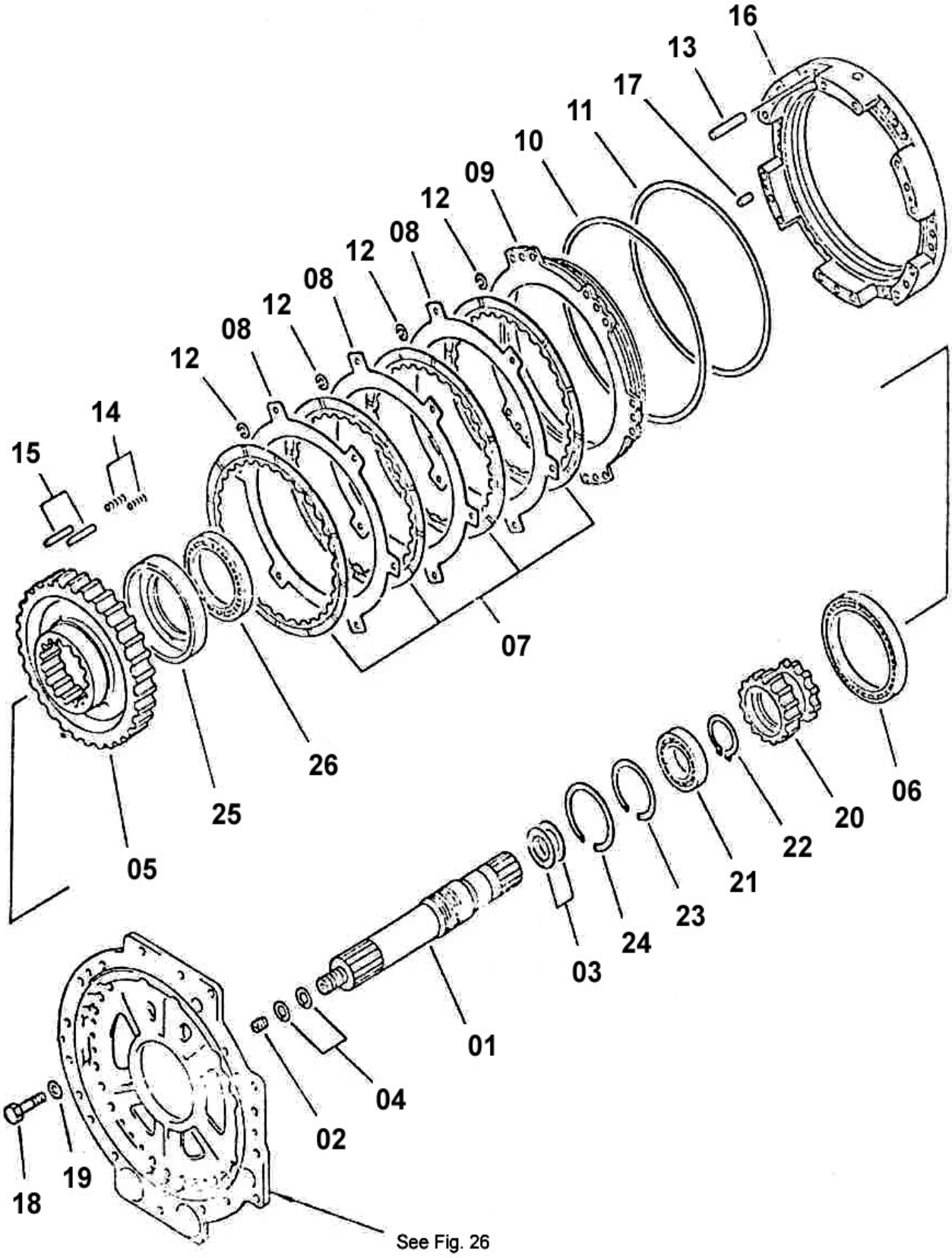

SLNO	PART NUMBER		DESCRIPTION	QTY	REMARKS
	953-TMB-0011		TORQUE FLOW ASSY		
	953-TM-02013	*	TRANSMISSION ASSY	1	
01	953-TM-54195	**	SHAFT	1	
02	125-TM-13736	**	PLUG	1	
03	CSR01-20854	**	RING,SEAL	2	
04	CSR01-20352	**	RING,SEAL	2	
05	953-TM-54235	**	HUB, HIGH	1	
06	135-TM-92214	**	BEARING	1	
07	985-TM-92164	**	DISC (WHITE)(KIT)	4	
08	985-TM-12654	**	PLATE(KIT)	3	
09	985-TM-42195	**	PISTON,HIGH	1	
10	985-TM-62437	**	SEAL,RING	1	
11	985-TM-61035	**	SEAL,RING	1	
12	125-TM-93457	**	SPRING	24	
13	985-TM-11155	**	PIN	6	
14	125-CV-11712	**	SPRING	12	
15	985-TM-11496	**	PIN	12	
16	985-TM-41474	**	HOUSING.HIGH	1	
17	CFP04-01434	**	DOWEL PIN	2	
18	CFB07-21440	**	BOLT	17	
19	CFW04-14045	**	WASHER	17	
20	953-TM-54219	**	GEAR	1	
21	CBB00-06215	**	BEARING	1	
22	CFL01-17025	**	RING,SNAP	1	
23	953-TM-11045	**	RING,SNAP	1	
24	CFL04-10230	**	RING,SNAP	1	
25	985-TM-11869	**	SPACER	1	
26	985-TM-92723	**	BEARING	1	

FIG. 42 LOW CLUTCH

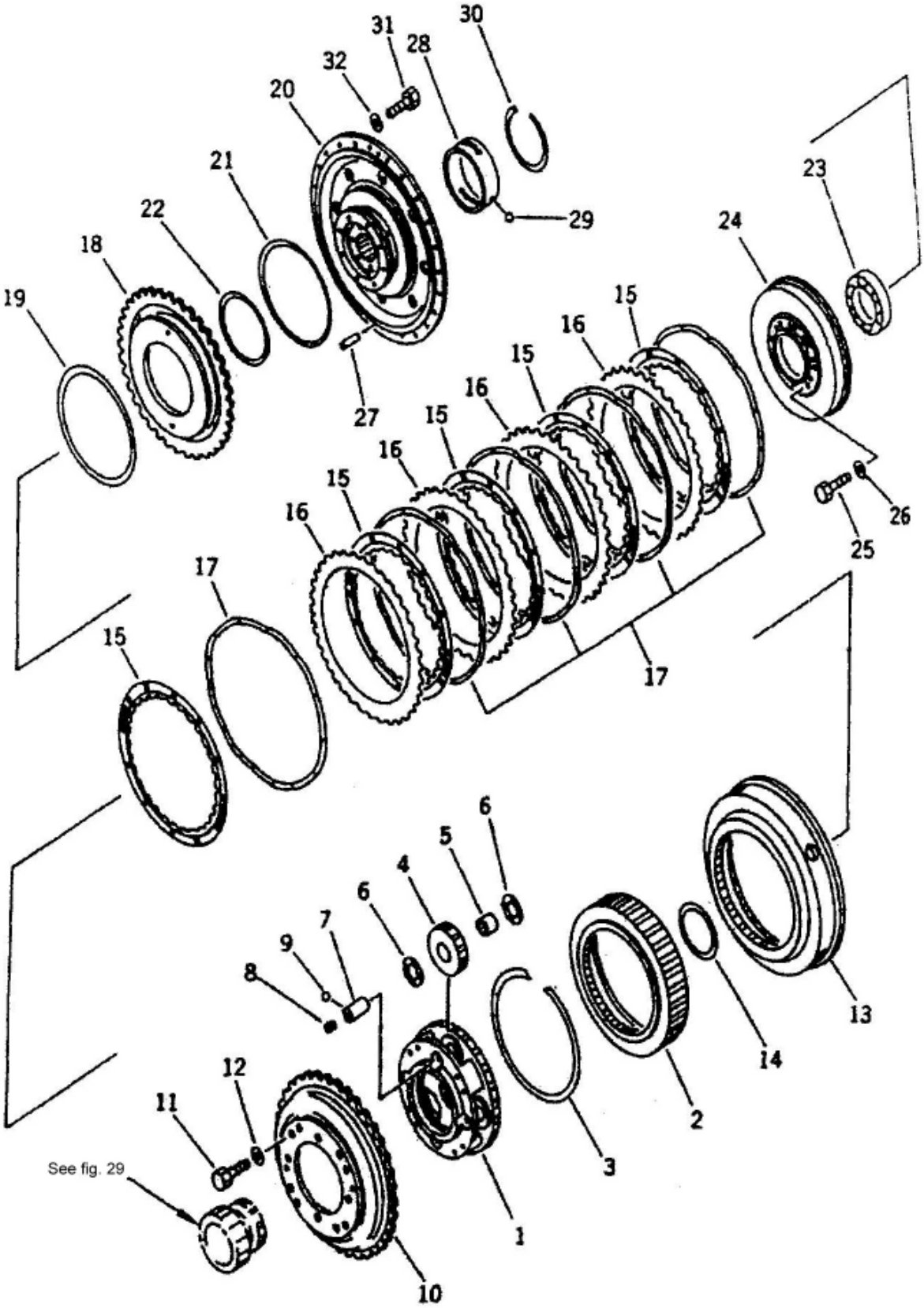

SLNO	PART NUMBER		DESCRIPTION	QTY	REMARKS
	953-TMB-0011		TORQUE FLOW ASSY	1	
	953-TM-02013	*	TRANSMISSION ASSY	1	
01	953-TM-32016	**	CARRIER, LOW	1	
02	985-TM-51915	**	GEAR, RING	1	
03	985-TM-11017	**	RING SNAP	1	
04	985-TM-52628	**	GEAR	4	
05	985-TM-92691	**	BEARING	4	
06	985-TM-92642	**	THRUST WASHER	8	
07	985-TM-52636	**	SHAFT	4	
08	985-TM-12557	**	PLUG	4	
09	CFZ01-00635	**	BALL	4	
10	953-TM-32032	**	PLATE	1	
11	CFS01-31235	**	SCREW	8	
12	CFW02-12032	**	WASHER	8	
13	985-TM-52133	**	GEAR, RING LOW	1	
14	CSR01-11205	**	RING, SEAL	1	
15	985-TM-92164	**	DISC	5	
16	985-TM-12184	**	PLATE	4	
17	985-TM-12354	**	WAVE SPRING	5	
18	985-TM-54179	**	PISTON, LOW	1	
19	985-TM-61124	**	RING, SEAL (KIT)	1	
20	953-TM-54138	**	HOUSING LOW	1	
21	985-TM-61116	**	SEAL RING (KIT)	1	
22	985-TM-61132	**	SEAL RING (KIT)	1	
23	953-TM-96031	**	BEARING	1	
24	953-TM-54113	**	COVER	1	
25	CFB01-21030	**	BOLT	8	
26	CFW05-12032	**	WASHER	8	
27	CFP04-01228	**	PIN, DOWEL	2	
28	953-TM-11078	**	BUSHING	1	
29	CBZ01-00635	**	BALL	1	
30	CFL06-10150	**	SNAP RING	1	
31	CFS01-31230	**	SCREW	24	
32	CFW05-12032	**	WASHER	24	

FIG. 43 4TH CLUTCH

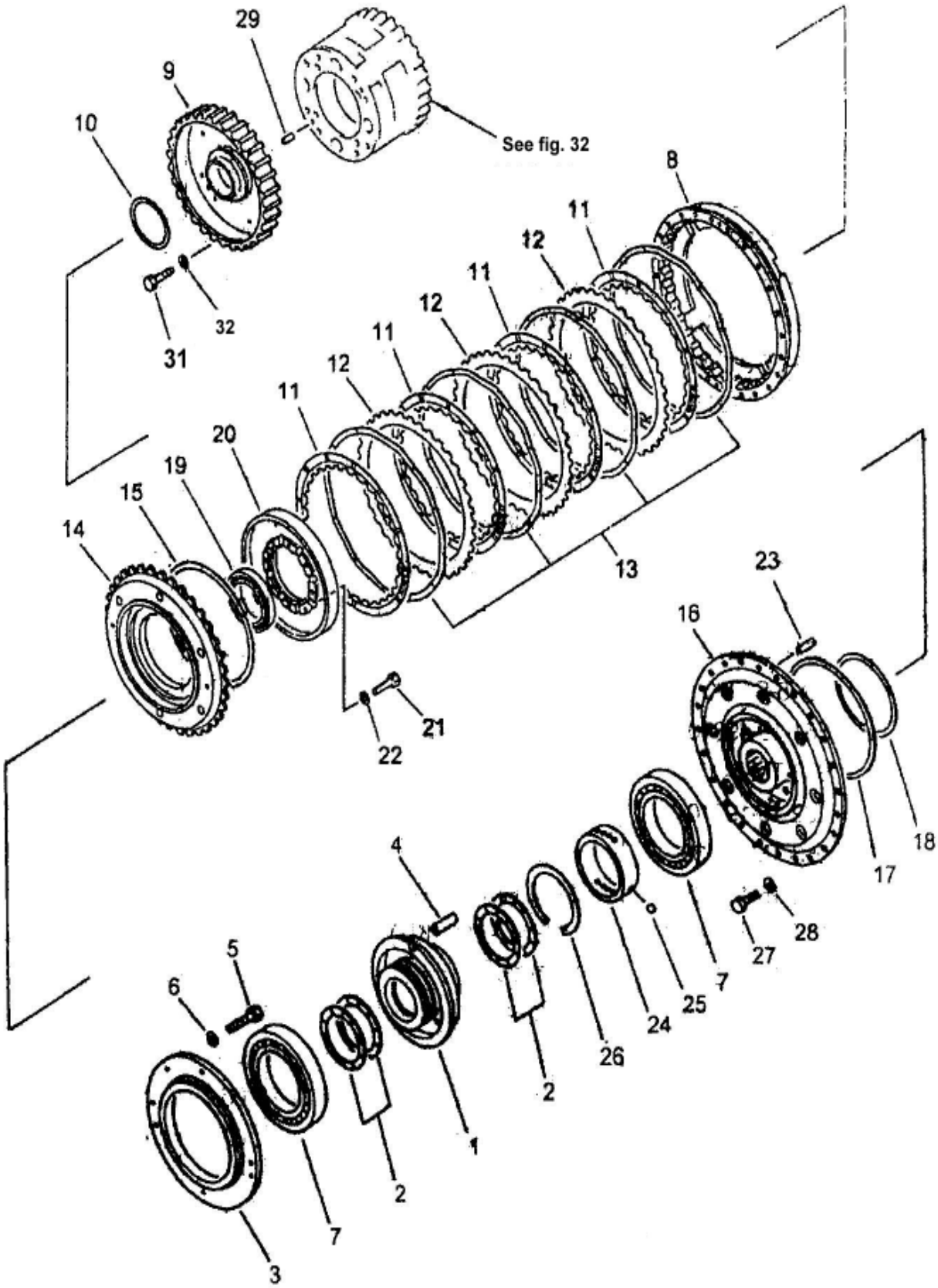

SLNO	PART NUMBER		DESCRIPTION	QTY	REMARKS
	953-TMB-0011		TORQUE FLOW ASSY		
	953-TM-02013	*	TRANSMISSION ASSY	1	
01	953-TM-02054	**	COLLAR	1	
02	985-TM-96015	**	SEAL RING	4	
03	953-TM-11037	**	CAGE	1	
04	CFP04-00820	**	PIN, DOWEL	1	
05	CFB01-21030	**	BOLT	6	
06	CFW05-10032	**	WASHER	6	
07	953-TM-96048	**	BEARING(KIT)	2	
08	985-TM-52141	**	DRUM	1	
09	953-TM-54098	**	HUB, 4TH(KIT)	1	
10	CSR01-11205	**	SEAL,RING (KIT)	1	
11	985-TM-92164	**	DISC	4	
12	985-TM-12184	**	PLATE	3	
13	985-TM-12354	**	SPRING	4	
14	953-TM-54179	**	PISTON 4TH	1	
15	985-TM-61116	**	SEAL RING	1	
16	953-TM-54138	**	HOUSING 4TH	1	
17	985-TM-61132	**	SEAL RING	1	
18	985-TM-61124	**	SEAL RING	1	
19	953-TM-96031	**	BEARING	1	
20	953-TM-54113	**	COVER	1	
21	CFB01-21030	**	BOLT	8	
22	CFW05-10032	**	WASHER	8	
23	CFP04-01228	**	PIN, DOWEL	2	
24	953-TM-11078	**	BUSHING	1	
25	CBZ01-00635	**	BALL	1	
26	CFL06-10150	**	SNAP RING	1	
27	CFB01-21030	**	BOLT	24	
28	CFW05-10032	**	WASHER	24	
29	CFP04-01228	**	PIN, DOWEL	2	
30	CFB07-21440	**	BOLT	8	
31	CFW05-14040	**	WASHER	8	

FIG. 44 3RD AND REVERSE CLUTCH

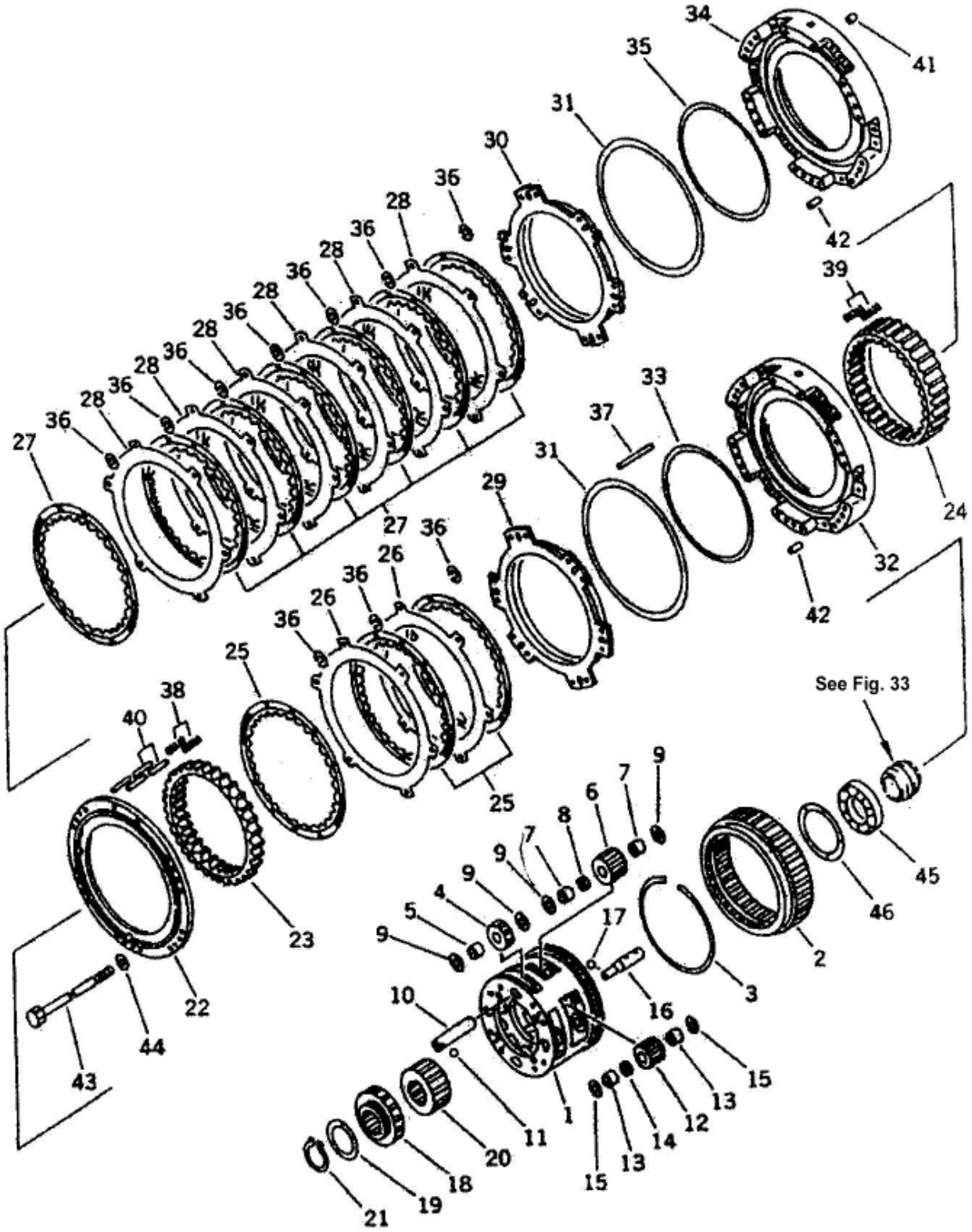

SLNO	PART NUMBER		DESCRIPTION	QTY	REMARKS
	953-TMB-0011		TORQUE FLOW ASSY		
	953-TM-02013	*	TRANSMISSION ASSY	1	
01	985-TM-31932	**	CARRIER	1	
02	985-TM-52117	**	RING GEAR 2ND	1	
03	985-TM-12346	**	SNAP RING	1	
04	985-TM-51997	**	GEAR	4	
05	985-TM-92318	**	BEARING	4	
06	985-TM-52036	**	GEAR	4	
07	985-TM-91046	**	BEARING	8	
08	985-TM-12054	**	COLLAR	4	
09	985-TM-91419	**	THRUST, WASHER	16	
10	985-TM-52069	**	SHAFT	4	
11	CBZ01-00635	**	BALL	4	
12	985-TM-52003	**	GEAR	4	
13	985-TM-91427	**	BEARING	8	
14	985-TM-12046	**	SPACER	4	
15	985-TM-92642	**	THRUST, WASHER	8	
16	985-TM-52077	**	SHAFT	4	
17	CBZ01-00635	**	BALL	4	
18	985-TM-51875	**	GEAR	1	
19	CSR01-11004	**	SEAL RING	1	
20	985-TM-51883	**	GEAR	1	
21	CFL01-17025	**	SNAP RING	1	
22	985-TM-42365	**	HOUSING	1	
23	985-TM-52385	**	RING GEAR 3ND	1	
24	953-TM-54057	**	RING GEAR (REVERSE)	1	
25	985-TM-92237	**	DISC	3	
26	985-TM-12249	**	PLATE	2	
27	985-TM-96023	**	DISC	7	
28	953-TM-11101	**	PLATE (KIT)	6	
29	985-TM-42219	**	PISTON 3RD	1	
30	953-TM-43098	**	PISTON REVERSE	1	
31	985-TM-61027	**	SEAL RING (KIT)	2	
32	985-TM-41466	**	HOUSING 3RD	1	
33	985-TM-61068	**	SEAL RING	1	
34	985-TM-41458	**	HOUSING REVERSE	1	

FIG. 44 3RD AND REVERSE CLUTCH

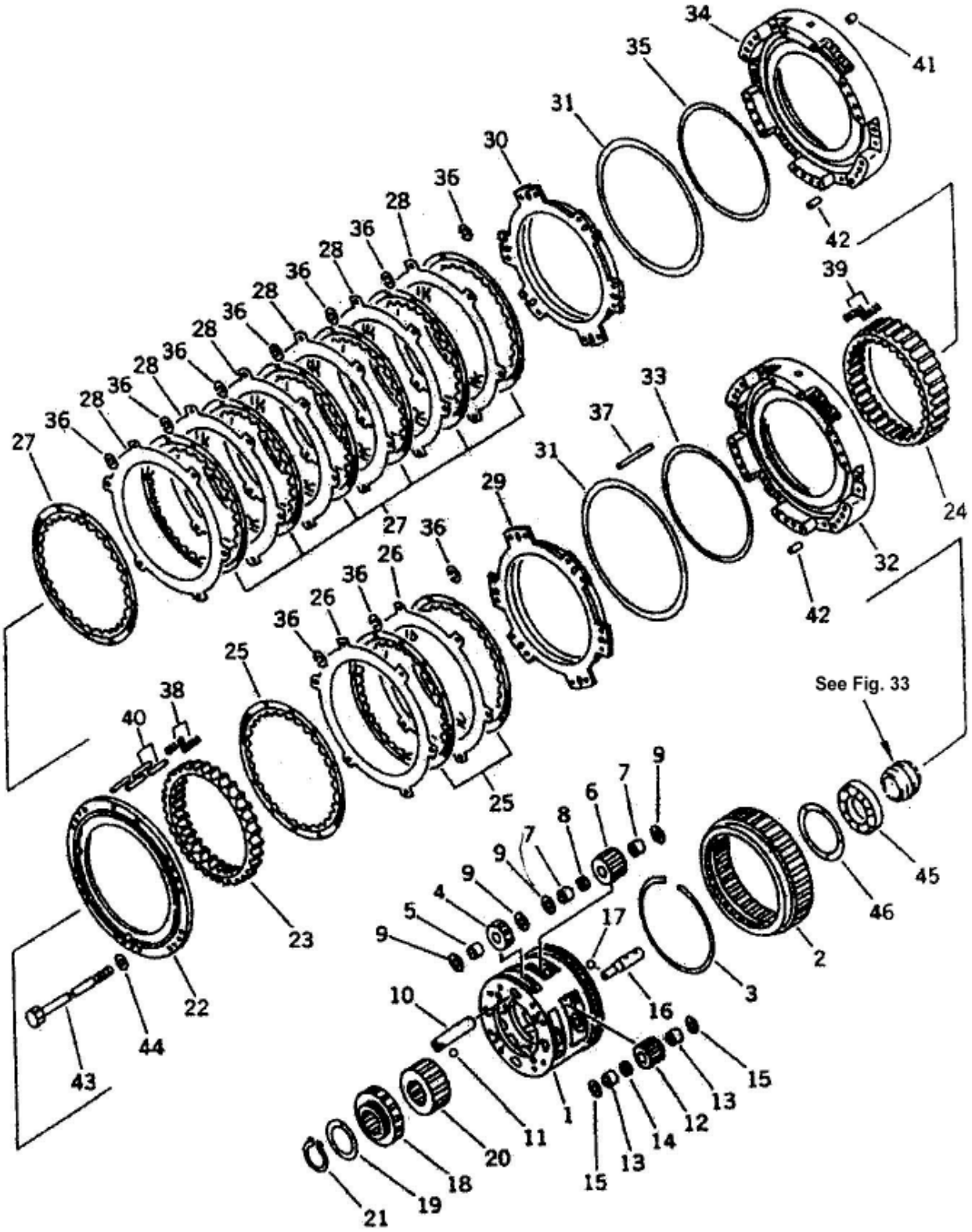

SLNO	PART NUMBER	DESCRIPTION	QTY	REMARKS
35	985-TM-61027	** SEAL RING	1	
36	130-TM-93122	** SPRING	60	
37	985-TM-11511	** PIN	6	
38	985-TM-11009	** SPRING	12	
39	130-TM-93106	** SPRING	12	
40	985-TM-11503	** PIN	12	
41	985-TM-12379	** SLEEVE	20	
42	CFP04-01842	** DOWEL PIN	4	
43	985-TM-11536	** BOLT	20	
44	CFW05-16045	** WASHER	20	
45	985-TM-92723	** BEARING	1	
46	985-TM-22682	** SEAL RING	1	

FIG. 45 2ND AND 1ST CLUTCH

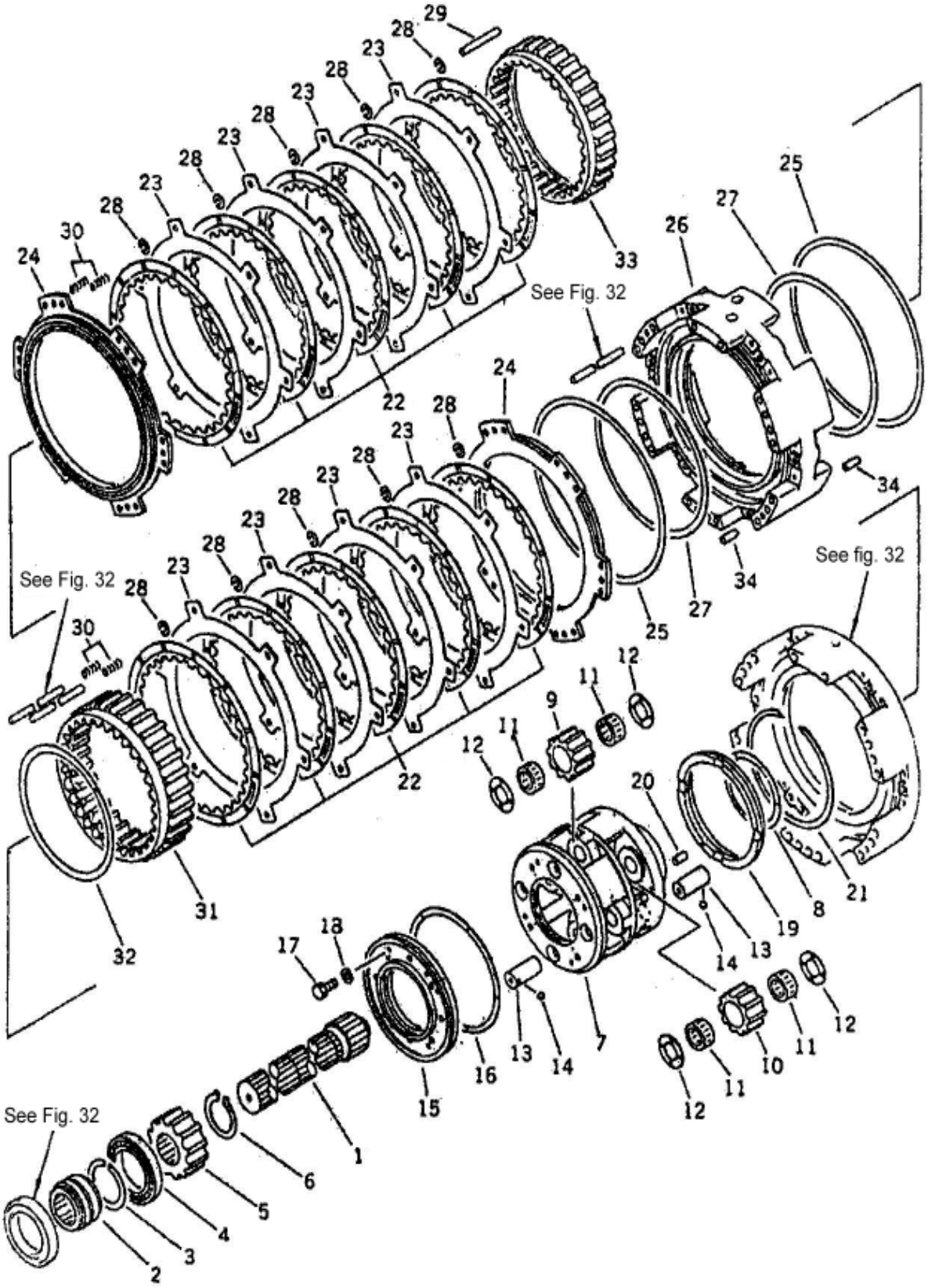

SLNO	PART NUMBER		DESCRIPTION	QTY	REMARKS
	953-TMB-0011		TORQUE FLOW ASSY		
	953-TM-02013	*	TRANSMISSION ASSY	1	
01	985-TM-51842	**	SHAFT	1	
02	985-TM-12598	**	SPACER	1	
03	985-TM-12702	**	SNAP RING	1	
04	985-TM-92723	**	BEARING	1	
05	985-TM-51891	**	GEAR	1	
06	CFL01-17025	**	SNAP RING	1	
07	985-TM-31949	**	CARRIER 1ST & 2ND	1	
08	985-TM-21086	**	SEAL RING	1	
09	985-TM-52011	**	GEAR	4	
10	985-TM-52028	**	GEAR	4	
11	985-TM-92326	**	BEARING	16	
12	985-TM-92091	**	THRUST WASHER	16	
13	985-TM-52085	**	SHAFT	8	
14	CBZ01-00635	**	BALL	8	
15	985-TM-11982	**	COVER	1	
16	985-TM-21101	**	SEAL RING	1	
17	CFS01-31030	**	SCREW	4	
18	CFW05-10032	**	WASHER	4	
19	985-TM-41952	**	BUSHING	1	
20	CFP04-00820	**	DOWEL PIN	1	
21	985-TM-12338	**	SNAP RING	1	
22	985-TM-92156	**	DISC	10	
23	985-TM-12176	**	PLATE	8	
24	985-TM-42202	**	PISTON 1ST & 2ND	2	
25	985-TM-61027	**	SEAL RING (KIT)	2	
26	985-TM-41441	**	HOUSING 1ST & 2ND	1	
27	985-TM-61068	**	SEAL RING (KIT)	2	
28	130-TM-93122	**	SPRING	60	
29	985-TM-11528	**	PIN	6	
30	985-TM-11325	**	SPRING	24	
31	985-TM-52117	**	RING GEAR 1ST	1	
32	985-TM-12346	**	RING	1	
33	985-TM-52109	**	RING GEAR 2ND	1	
34	CFP04-01842	**	DOWEL PIN	4	

FIG. 46 OUTPUT SHAFT

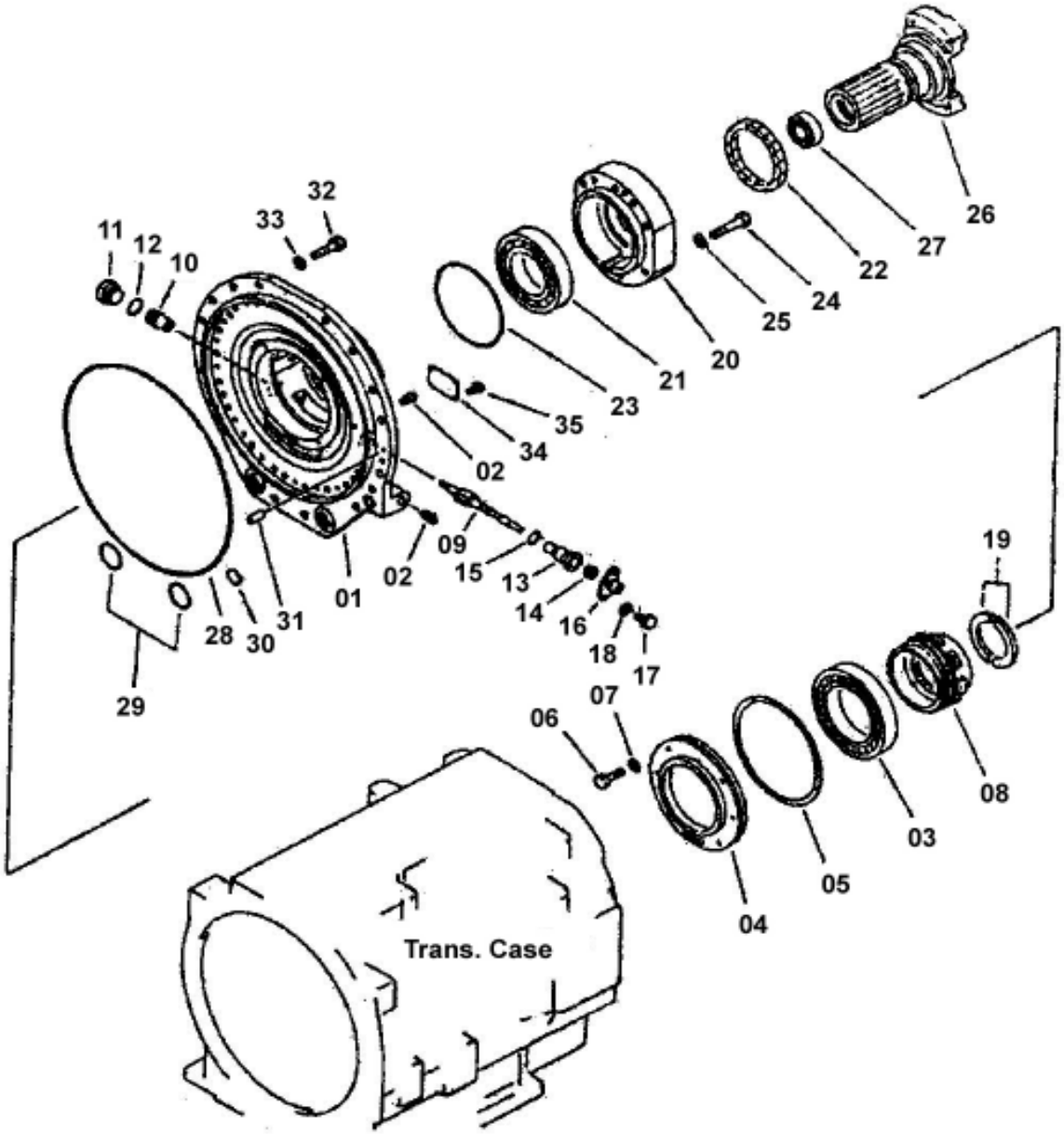

SLNO	PART NUMBER	DESCRIPTION	QTY	REMARKS
	953-TMB-0011	TORQUE FLOW ASSY		
	953-TM-02013	* TRANSMISSION ASSY	1	
	985-TM-02123	** CASE ASSY	1	
01	985-TM-42251	*** CASE	1	
02	CPL02-11933	*** PLUG	1	
03	985-TM-92472	** BEARING	1	
04	985-TM-11974	** COVER	1	
05	985-TM-22309	** SEAL RING	1	
06	CFB01-21035	** BOLT	4	
07	CFW05-10032	** WASHER	4	
08	985-TM-52271	** WORM GEAR	1	
09	985-TM-12679	** SHAFT	1	
10	985-TM-42665	** BUSHING	1	
11	CPL06-13618	** PLUG	1	
12	CHS03-03634	** O-RING (KIT)	1	
13	985-TM-42446	** BUSHING	1	
14	985-TM-91184	** OIL SEAL (KIT)	1	
15	CHS01-13025	** O-RING (KIT)	1	
16	985-TM-02083	** COVER	1	
17	CFS01-30820	** SCREW	2	
18	CFW05-08023	** WASHER	2	
19	985-TM-12581	** SPACER	1	
20	985-TM-42268	** CAGE	1	
21	985-TM-92748	** BEARING	1	
22	CHS07-10120	** OIL SEAL (KIT)	1	
23	CHS01-05200	** O-RING (KIT)	1	
24	CFB01-21460	** BOLT	9	
25	CFW05-14045	** WASHER	9	
26	985-TM-51859	** COUPLING	1	
27	985-TM-92756	** BEARING	1	
28	985-TM-61076	** O-RING (KIT)	1	
29	CHS01-12055	** O-RING (KIT)	1	
30	CHS01-13038	** O-RING	1	
31	CFP04-01842	** PIN DOWEL	1	
32	CFB07-21645	** BOLT	16	
33	CFW05-16045	** WASHER	16	
34	125-TM-23789	** PLATE	1	
35	CFS33-03068	** SCREW	4	

FIG. 47 TRANSMISSION CONTROL VALVE (1/4)

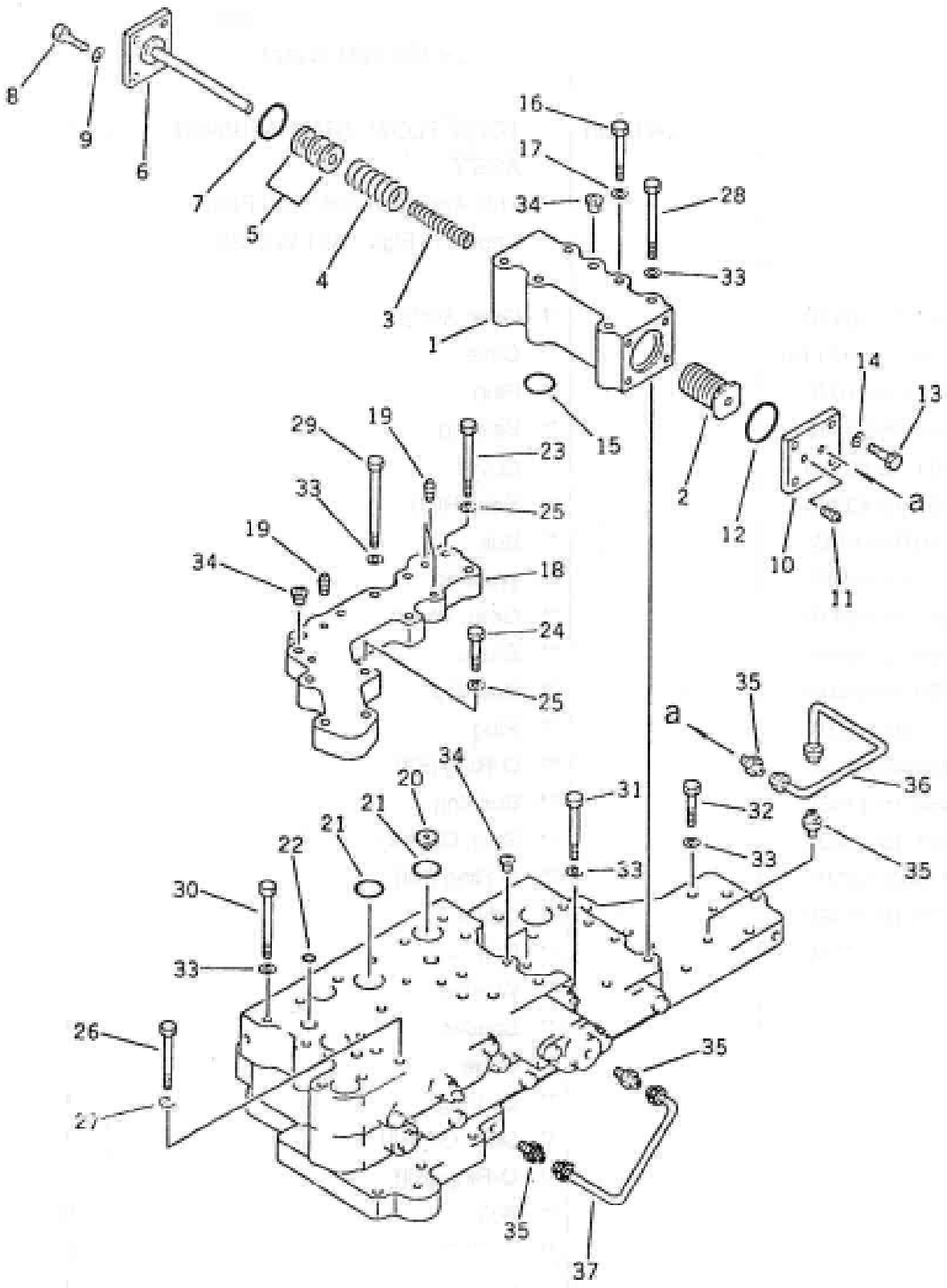

SLNO	PART NUMBER		DESCRIPTION	QTY	REMARKS
	953-TMB-0011		TORQUE FLOW ASSY		
01	985-CV-01072	*	TRANSMISSION VALVE ASSY	1	
01	985-CV-42497	**	VALVE BODY	1	
02	985-CV-12291	**	VALVE	1	
03	985-CV-12704	**	SPRING	1	
04	985-CV-12712	**	SPRING	1	
05	985-CV-12729	**	WASHER, 6mm	3	
06	985-CV-02093	**	COVER	1	
07	CHS01-73040	**	O-RING (KIT)	1	
08	CFS01-31030	**	SCREW	4	
09	CFW05-10032	**	WASHER	4	
10	985-CV-02133	**	COVER ASSY	1	
	985-CV-12534	**	COVER	1	
11	CPL01-20810	**	PLUG	1	
12	CHS01-73045	**	O RING (KIT)	1	
13	CFS01-31030	**	SCREW	4	
14	CFW05-10032	**	WASHER	4	
15	CHS01-73032	**	0-RING (KIT)	1	
16	CFB01-21090	**	BOLT	2	
17	CFW05-10032	**	WASHER	2	
18	985-CV-02141	**	COVER ASSY	1	
	985-CV-42383	**	COVER	1	
19	CPL01-10810	**	PLUG	4	
20	985-CV-12486	**	ORIFICE	2	
21	CHS01-73028	**	O-RING (KIT)	5	
22	CHS01-72012	**	O-RING (KIT)	2	
23	CFB01-21045	**	BOLT	2	
24	CFB01-21045	**	BOLT	2	
25	CFW05-10032	**	WASHER	4	
26	CFB02-21020	**	BOLT	1	
27	CFW05-10032	**	WASHER	1	
28	CFB02-21065	**	BOLT	4	
29	CFB02-21075	**	BOLT	7	
30	CFB02-21045	**	BOLT	5	
31	CFB01-21095	**	BOLT	2	
32	CFB01-21045	**	BOLT	9	
33	CFW05-10032	**	WASHER	27	

FIG. 47 TRANSMISSION CONTROL VALVE (1/4)

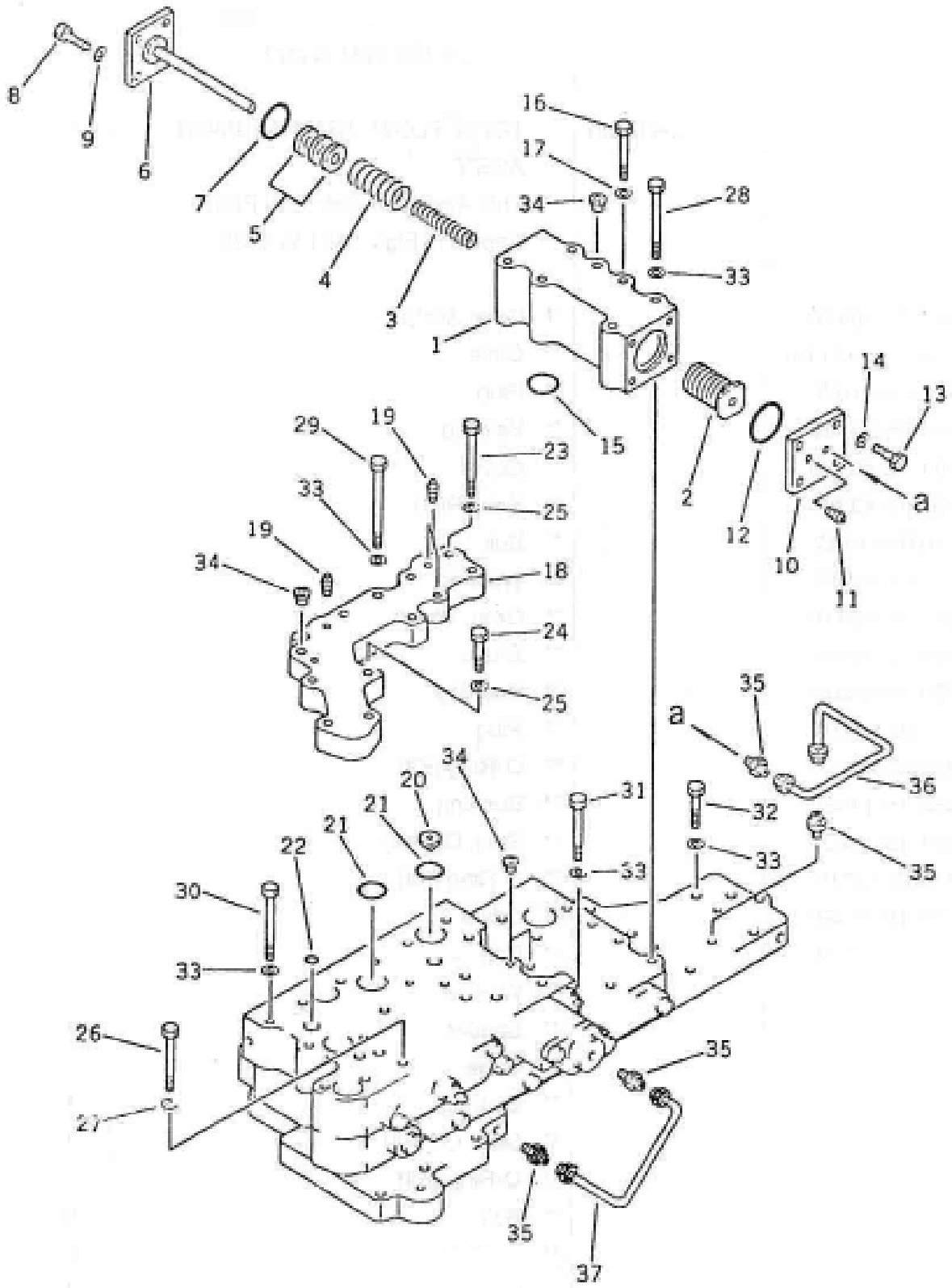

SLNO	PART NUMBER	DESCRIPTION	QTY	REMARKS
34	CPL10-01210	** PLUG	4	
35	CPF05-10710	** CONNECTOR	4	
36	985-CV-02052	** TUBE	1	
37	985-CV-02069	** TUBE	1	

FIG. 48 TRANSMISSION CONTROL VALVE (2/4)

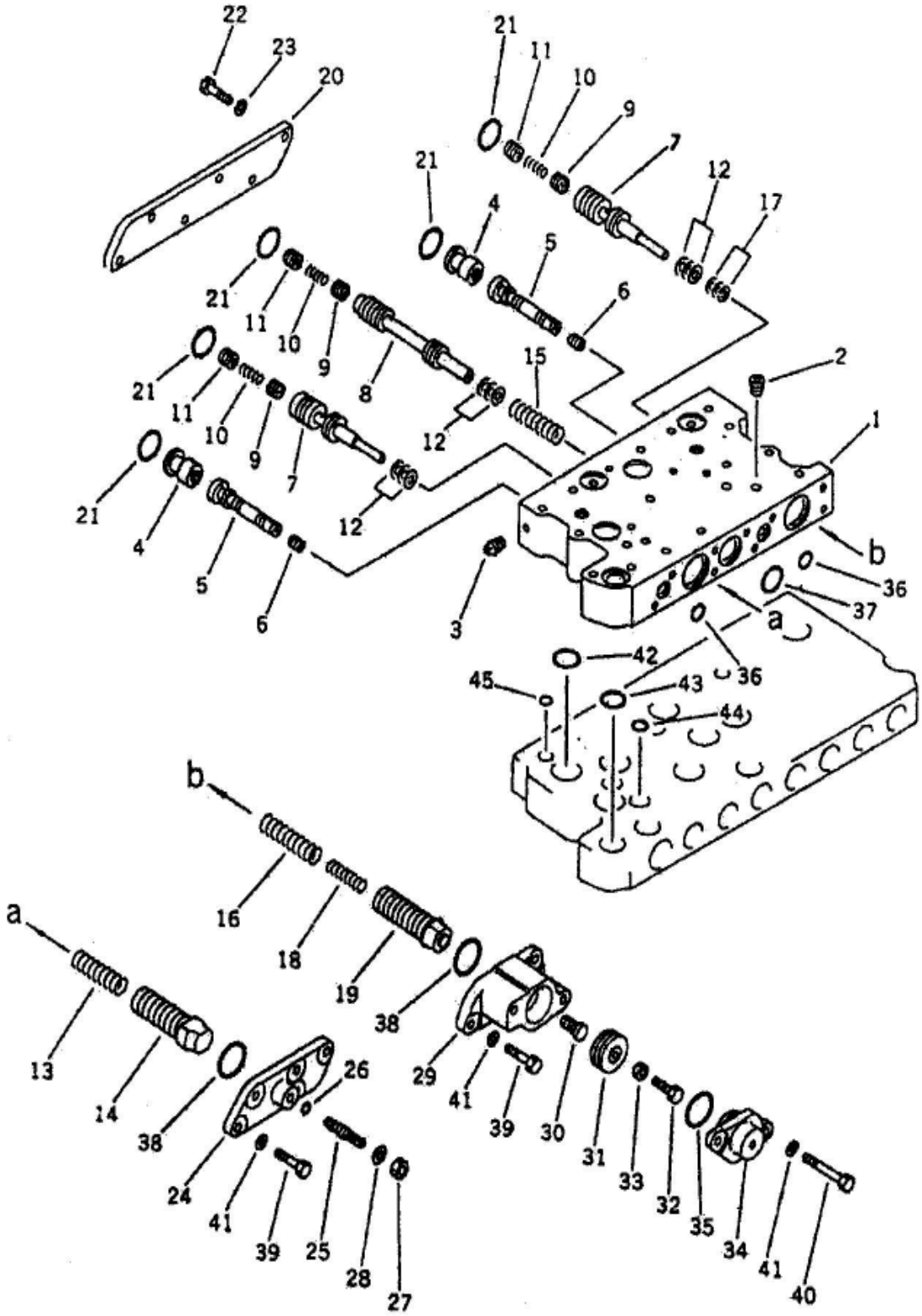

SLNO	PART NUMBER		DESCRIPTION	QTY	REMARKS
	953-TMB-0011		TORQUE FLOW ASSY		
01	985-CV-01072	*	TRANSMISSION CONTROL VALVE ASSY	1	
01	985-CV-01258	**	VALVE BODY ASSY	1	
01	985-CV-42367	***	VALVE BODY	1	
02	CPL01-11113	***	PLUG	4	
03	CPL01-10810	***	PLUG	4	
04	985-CV-12461	***	PLUG	2	
05	985-CV-02085	***	VALVE	1	
06	380-CV-11211	***	PLUG	1	
07	985-CV-12307	***	VALVE	2	
08	985-CV-12429	***	VALVE	1	
09	113-CV-11402	***	VALVE	3	
10	113-CV-11419	***	SPRING	3	
11	113-CV-11395	***	VALVE	3	
12	985-CV-12689	***	SHIM,0.5mm	18	
13	985-CV-12664	***	SPRING	1	
14	985-CV-12445	***	VALVE	1	
15	985-CV-11992	***	SPRING	1	
16	985-CV-12648	***	SPRING	1	
17	985-CV-12697	***	SHIM,0.5mm	6	
18	985-CV-12656	***	SPRING	1	
19	985-CV-02044	***	VALVE	1	
20	985-CV-12623	***	COVER	1	
21	CHS01-73035	***	O-RING (KIT)	5	
22	CFB01-21030	***	BOLT	6	
23	CFW05-10032	***	WASHER	6	
24	985-CV-11260	***	COVER	1	
25	380-CV-11455	***	PLUG	1	
26	CHS01-71009	***	O-RING (KIT)	1	
27	CFN01-21084	***	NUT	1	
28	CFW05-10032	***	WASHER	1	
29	985-CV-42545	***	VALVE BODY	1	
30	985-CV-12591	***	VALVE	1	
31	985-CV-12583	***	VALVE	1	

FIG. 48 TRANSMISSION CONTROL VALVE (2/4)

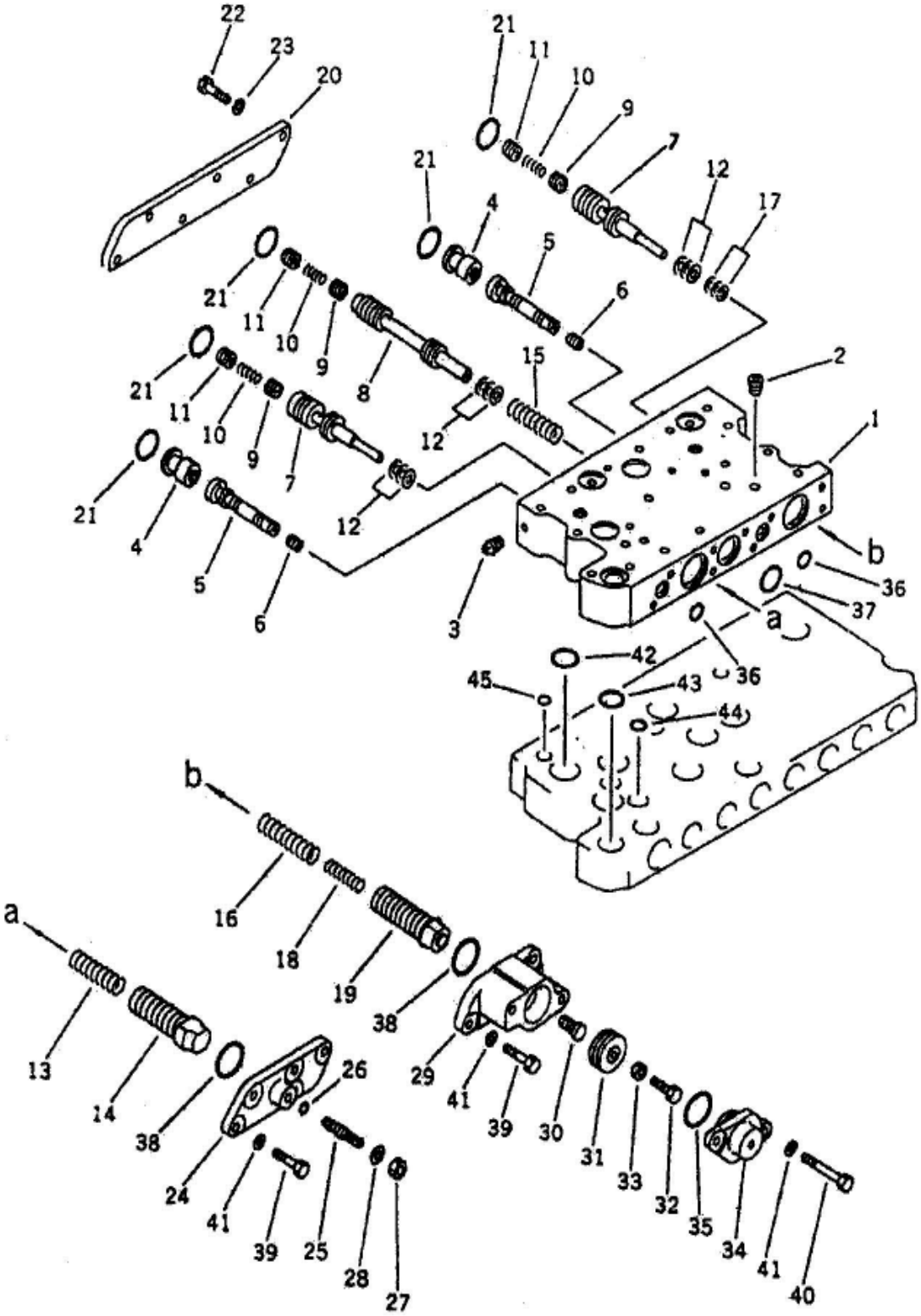

SLNO	PART NUMBER	DESCRIPTION	QTY	REMARKS
32	985-CV-42561	*** BOLT	1	
33	CHS01-13038	*** NUT	1	
34	985-CV-42561	*** COVER	1	
35	CHS10-73038	*** O-RING (KIT)	1	
36	CHS01-72018	*** O-RING (KIT)	2	
37	CHS01-73030	*** O-RING (KIT)	1	
38	CHS10-73038	*** O-RING (KIT)	2	
39	CFB01-21030	*** BOLT	7	
40	CFB01-21080	*** BOLT	2	
41	CFW05-10032	*** WASHER	9	
42	CHS01-73032	*** O-RING (KIT)	7	
43	CHS01-73025	*** O-RING (KIT)	3	
44	CHS01-72018	*** O-RING (KIT)	3	
45	CHS01-72012	*** O-RING (KIT)	2	

FIG. 49 TRANSMISSION CONTROL VALVE (3/4)

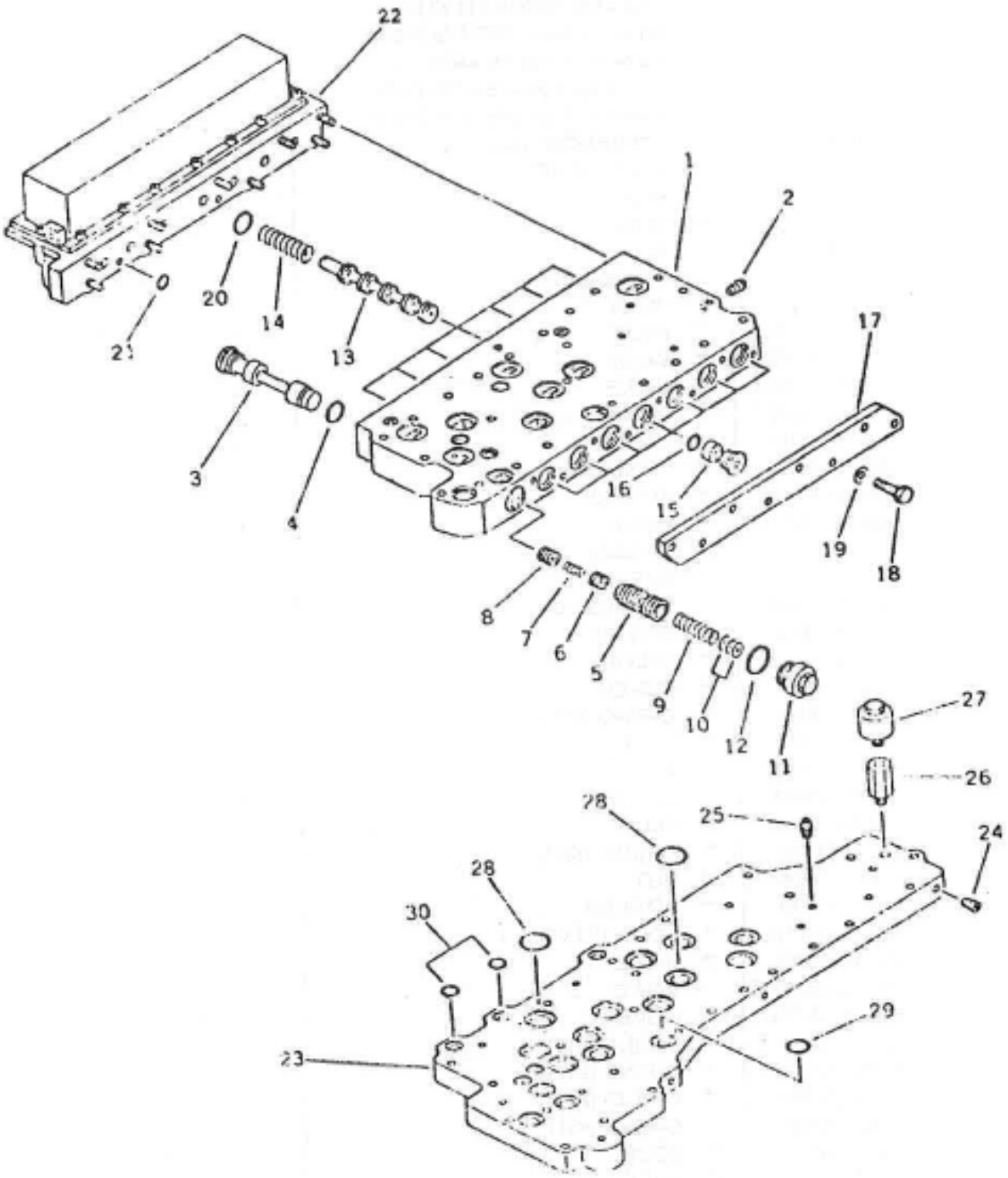

SLNO	PART NUMBER		DESCRIPTION	QTY	REMARKS
	953-TMB-0011		TORQUE FLOW ASSY		
01	985-CV-01072	*	TRANSMISSION CONTROL VALVE ASSY	1	
01	985-CV-02166	**	VALVE BODY ASSY	1	
01	985-CV-42407	***	VALVE BODY	1	
02	CPL01-10810	***	PLUG	2	
03	985-CV-12478	***	SPACER	1	
04	CHS01-72021	***	O-RING (KIT)	1	
05	985-CV-12453	***	VALVE	1	
06	113-CV-11402	***	VALVE	1	
07	113-CV-11419	***	SPRING	1	
08	113-CV-11395	***	VALVE	1	
09	113-CV-11443	***	SPRING	1	
10	113-CV-11468	***	SHIM,0.5mm	6	
11	985-CV-12672	***	PLUG	1	
12	CHS03-13034	***	O-RING (KIT)	1	
13	985-CV-12437	***	VALVE	7	
14	380-CV-11608	***	SPRING	7	
15	985-CV-11984	***	STOPPER	7	
16	CHS01-72018	***	O-RING (KIT)	7	
17	985-CV-12631	***	COVER	1	
18	CFB01-21030	***	BOLT	8	
19	CFW05-10032	***	WASHER	8	
20	CHS01-73025	***	O-RING (KIT)	7	
21	CHS01-72015	***	O-RING (KIT)	2	
22	985-CV-02077	***	SOLENOID VALVE ASSY	1	
23	985-CV-42026	***	VALVE SEAT	1	
24	CPL01-11130	***	PLUG	1	
25	CPL10-10180	***	PLUG	6	
26	985-CV-12356	***	EXTENSION	1	
27	CRB01-13052	***	BREATHER	1	
28	CHS01-73032	***	O-RING (KIT)	12	
29	CHS01-73025	***	O-RING (KIT)	4	
30	CHS01-72018	***	O-RING (KIT)	5	

FIG. 50 TRANSMISSION CONTROL VALVE (4/4)

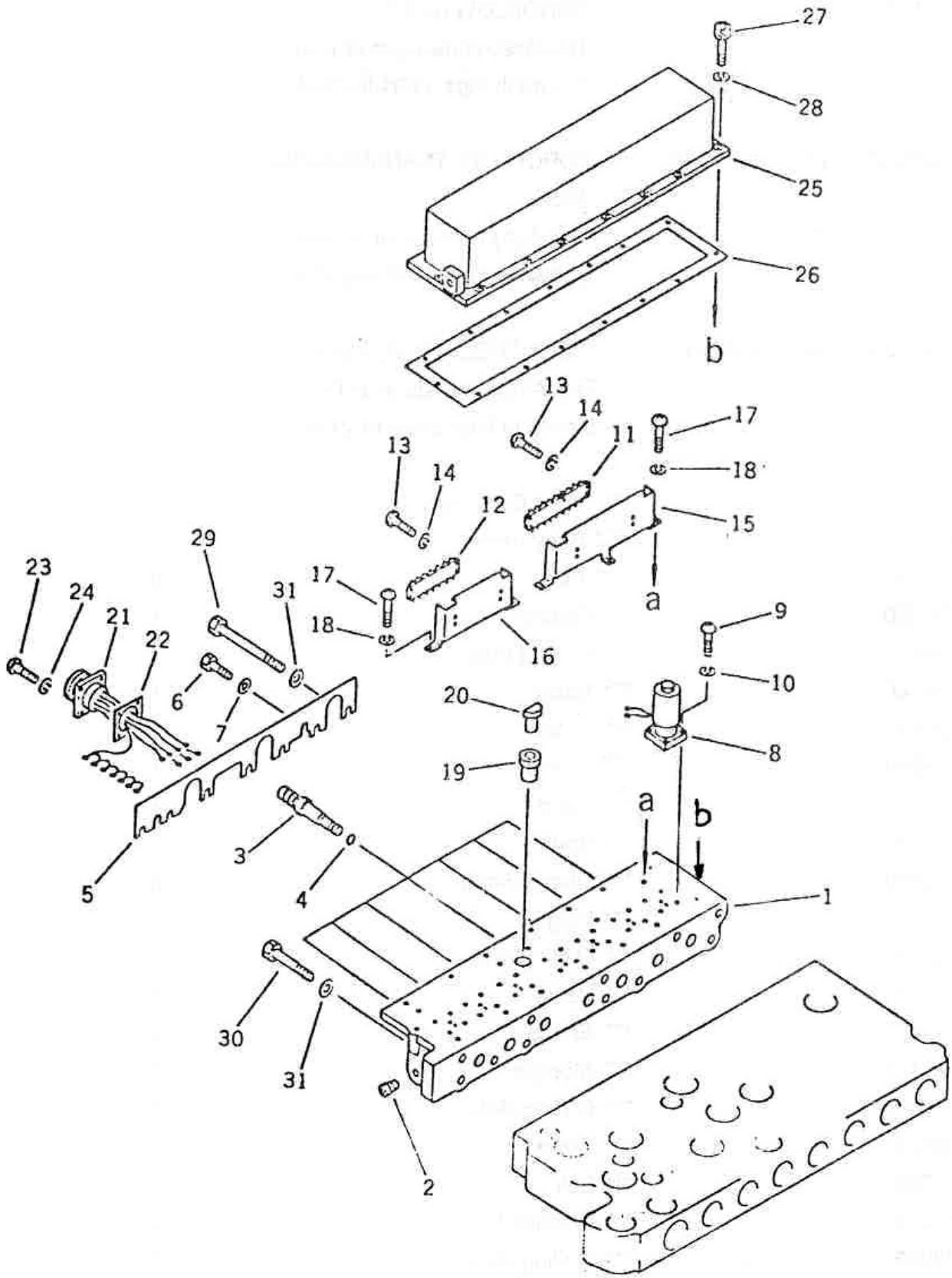

SLNO	PART NUMBER		DESCRIPTION	QTY	REMARKS
	953-TMB-0011		TORQUE FLOW ASSY		
01	985-CV-01072	*	TRANSMISSION CONTROL VALVE ASSY	1	
01	985-CV-02077	**	SOLENOID VALVE ASSY	1	
01	985-CV-42131	***	VALVE SEAT	1	
02	CPL02-11113	***	PLUG	2	
03	985-CV-12275	***	SPOOL	7	
04	CHS01-71009	***	O-RING (KIT)	7	
05	985-CV-12283	***	PLATE	1	
06	CFB01-30816	***	BOLT	2	
07	CFW05-08023	***	WASHER	2	
08	985-CV-62093	***	SOLENOID VALVE	7	
09	985-CV-12883	***	SCREW	28	
10	CFW01-10410	***	WASHER,SPRING	28	
11	985-CV-92263	***	TERMINAL	1	
12	452-CV-81579	***	TERMINAL	1	
13	CFS15-10310	***	SCREW	8	
14	CFW01-10307	***	WASHER,SPRING	8	
15	985-CV-12218	***	STAND	1	
16	985-CV-12226	***	STAND	1	
17	CFS15-10412	***	SCREW	5	
18	CFW10-10410	***	WASHER,SPRING	5	
19	985-CV-62106	***	BUSHING	1	
20	985-CV-62122	***	PAD	1	
21	985-CV-03032	***	WIRE ASSY	1	
22	985-CV-72118	***	GASKET (KIT)	1	
23	CFS15-10310	***	SCREW	4	
24	CFW01-10307	***	WASHER,SPRING	4	
25	985-CV-03024	***	COVER	1	
26	985-CV-72207	***	GASKET (KIT)	1	
27	CFS13-04616	***	SCREW	15	
28	CFW01-10619	***	WASHER,SPRING	15	
29	CFB02-21030	***	BOLT	5	
30	CFB01-21065	***	BOLT	4	
31	CFW05-10032	***	WASHER	9	

FIG. 50 TRANSMISSION CONTROL VALVE (4/4)

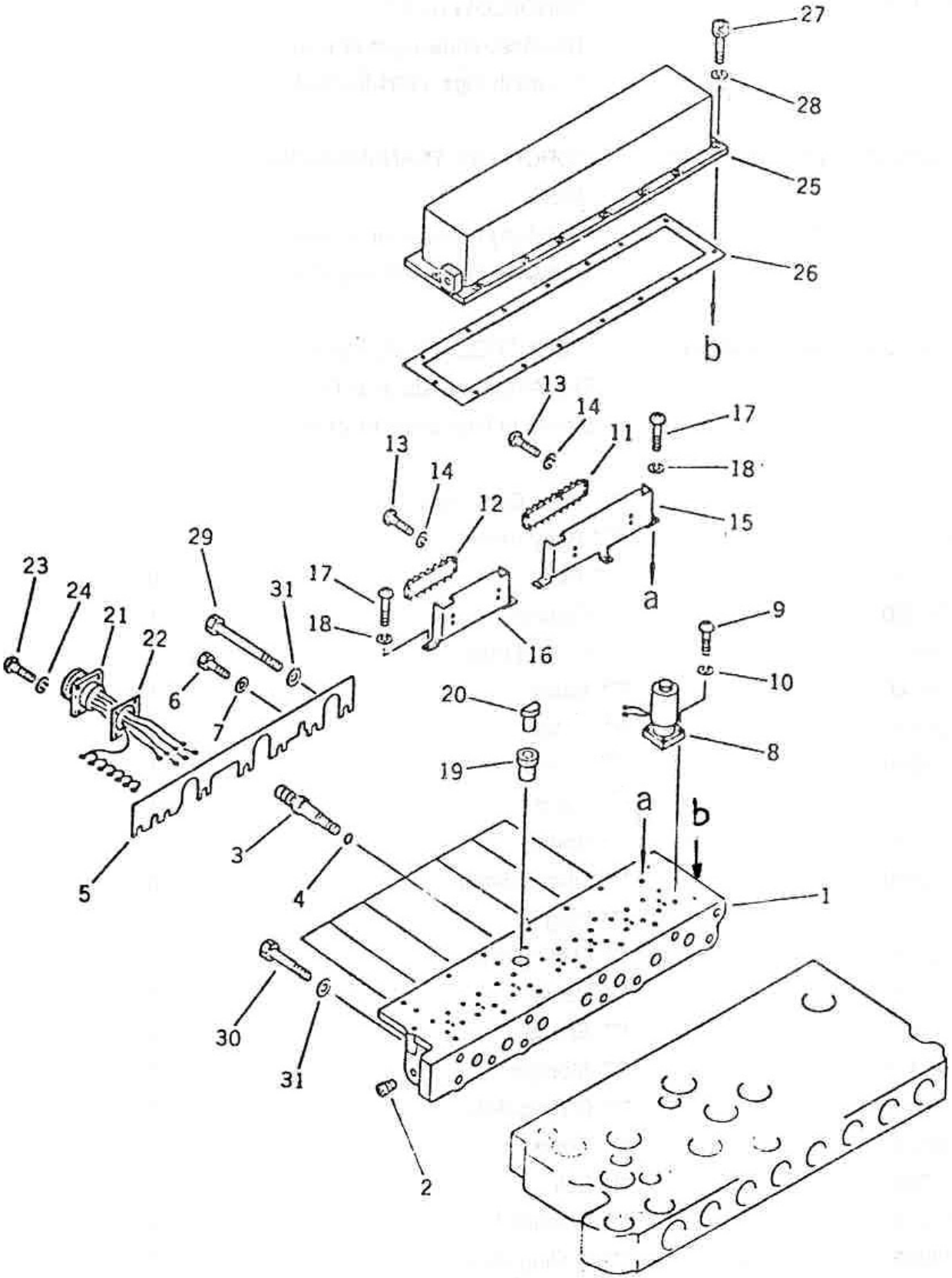

SLNO	PART NUMBER	DESCRIPTION	QTY	REMARKS
	953-ZZ-00026	TRANSMISSION CONTROL VALVE SEAL KIT		
	953-ZZ-00059	T.C. VALVE SEAL KIT		
	953-ZZ-00075	TRANS. C.V. SEAL KIT		

FIG. 51 TORQUE CONVERTER & T/M CONTROL VALVE COVER ASSY

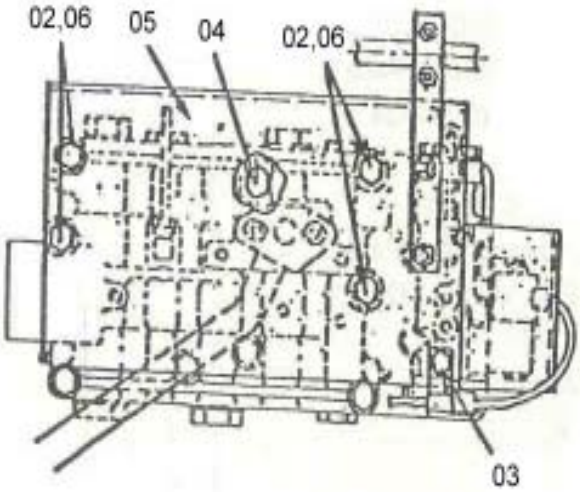

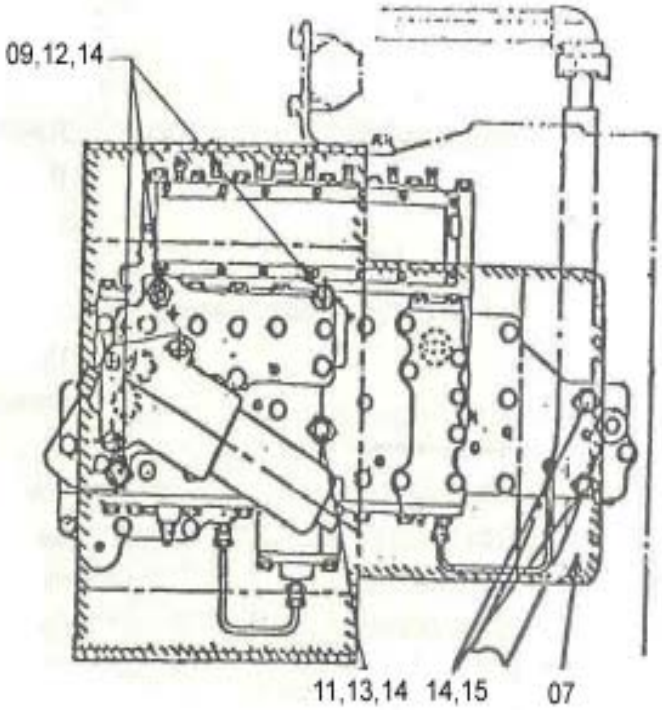

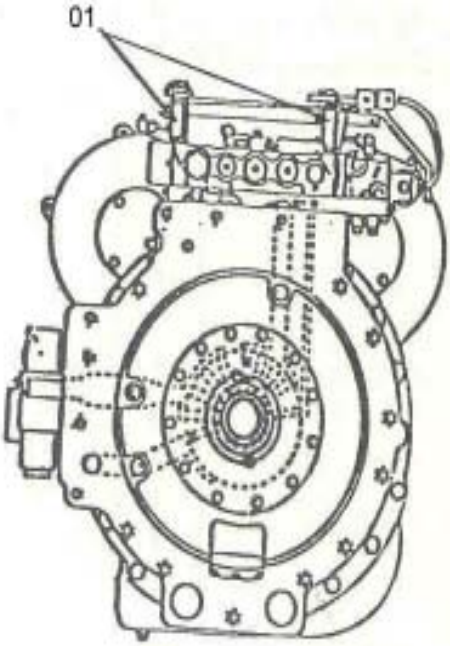

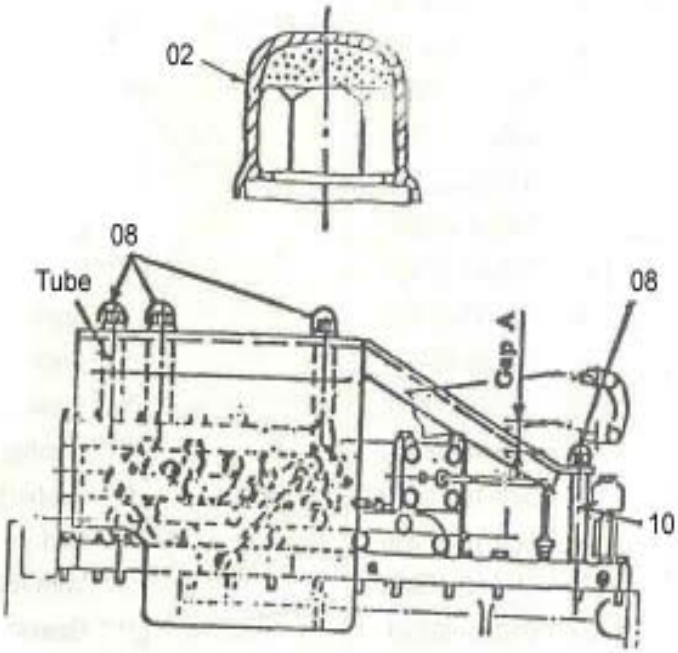

TORQUE CONVERTER & T/M CONTROL VALVE COVER ASSY **FIG NO. 51**

SLNO	PART NUMBER		DESCRIPTION	QTY	REMARKS
	953-TMB-0011		TORQUE FLOW ASSY		
01	985-CV-01072	*	TRANSMISSION CONTROL VALVE ASSY	1	
01	985-TC-11711	**	TUBE	4	
02	711-28-36560	**	CAP	4	
03	CFS01-31016	**	SCREW	1	
04	CFB02-21215	**	BOLT	1	
05	985-TC-02015	**	COVER	1	
06	CFB02-21290	**	BOLT	4	
07	985-TM-02131	**	COVER	1	
08	561-15-45720	**	CAP	6	
09	985-TM-12792	**	TUBE	3	
10	985-TM-12808	**	TUBE	2	
11	985-TM-12816	**	TUBE	1	
12	CFB02-21035	**	BOLT	3	
13	CFB02-21065	**	BOLT	1	
14	CFW05-10032	**	WASHER	6	
15	CFB02-21045	**	BOLT	2	
16	CFW01-11236	**	WASHER,SPRING	4	

FIG. 52 TRANSMISSION ADDITIONAL FILTER & COVER ASSY

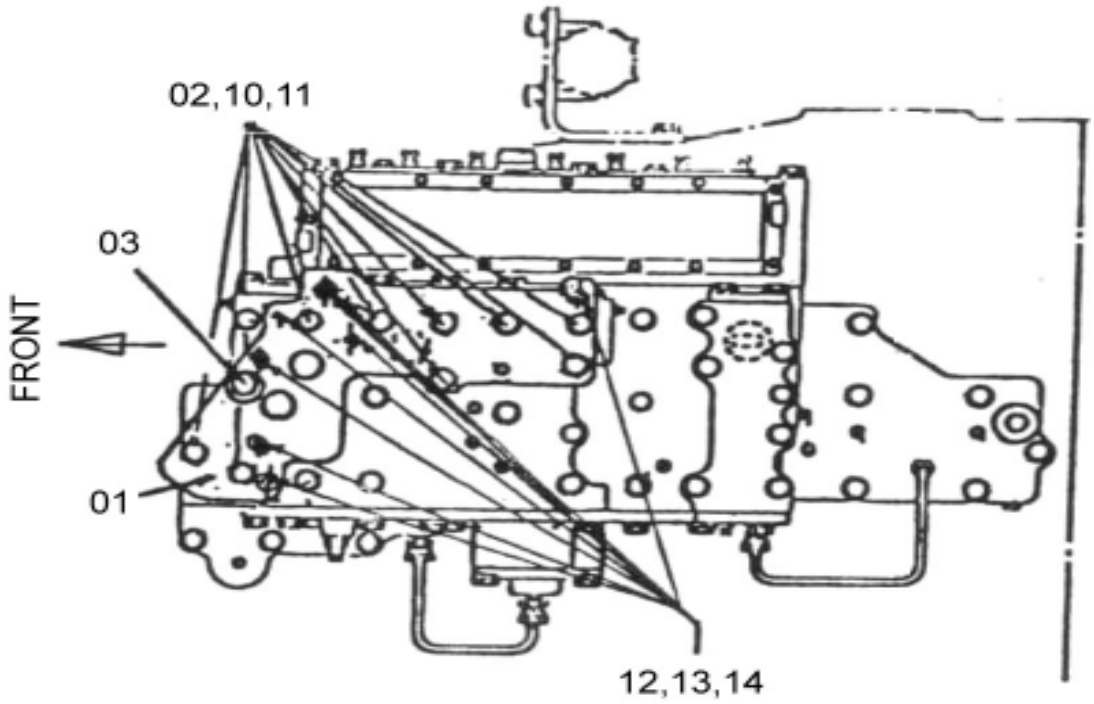

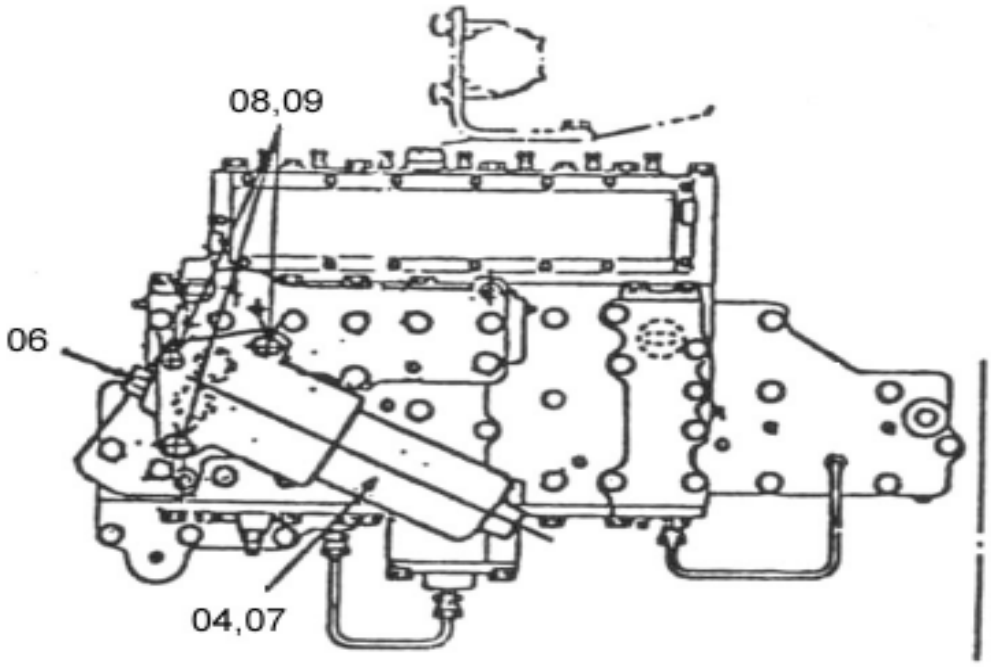

TRANSMISSION ADDITIONAL FILTER & COVER ASSY **FIG NO. 52**

SLNO	PART NUMBER	DESCRIPTION	QTY	REMARKS
	953-TMB-0011	TORQUE FLOW ASSY		
01	985-CV-01072	* TRANSMISSION CONTROL VALVE ASSY	1	
01	985-CV-12389	** COVER	1	
02	CFB02-21045	** BOLT	2	
03	CFB02-21060	** BOLT	1	
04	985-CV-02182	** FILTER ASSY	1	
05	CHS03-11823	** O-RING	1	
06	CPL06-11812	** PLUG	2	
07	CHS01-73028	** O-RING	3	
08	CFW05-10032	** WASHER	3	
09	CFB02-21075	** BOLT	6	
10	CFB02-21045	** BOLT	1	
11	CPL01-10810	** PLUG	4	
12	CPL02-11217	** PLUG	2	
13	CPL02-11521	** PLUG	2	

FIG. 53 TRANSMISSION ADDITIONAL FILTER

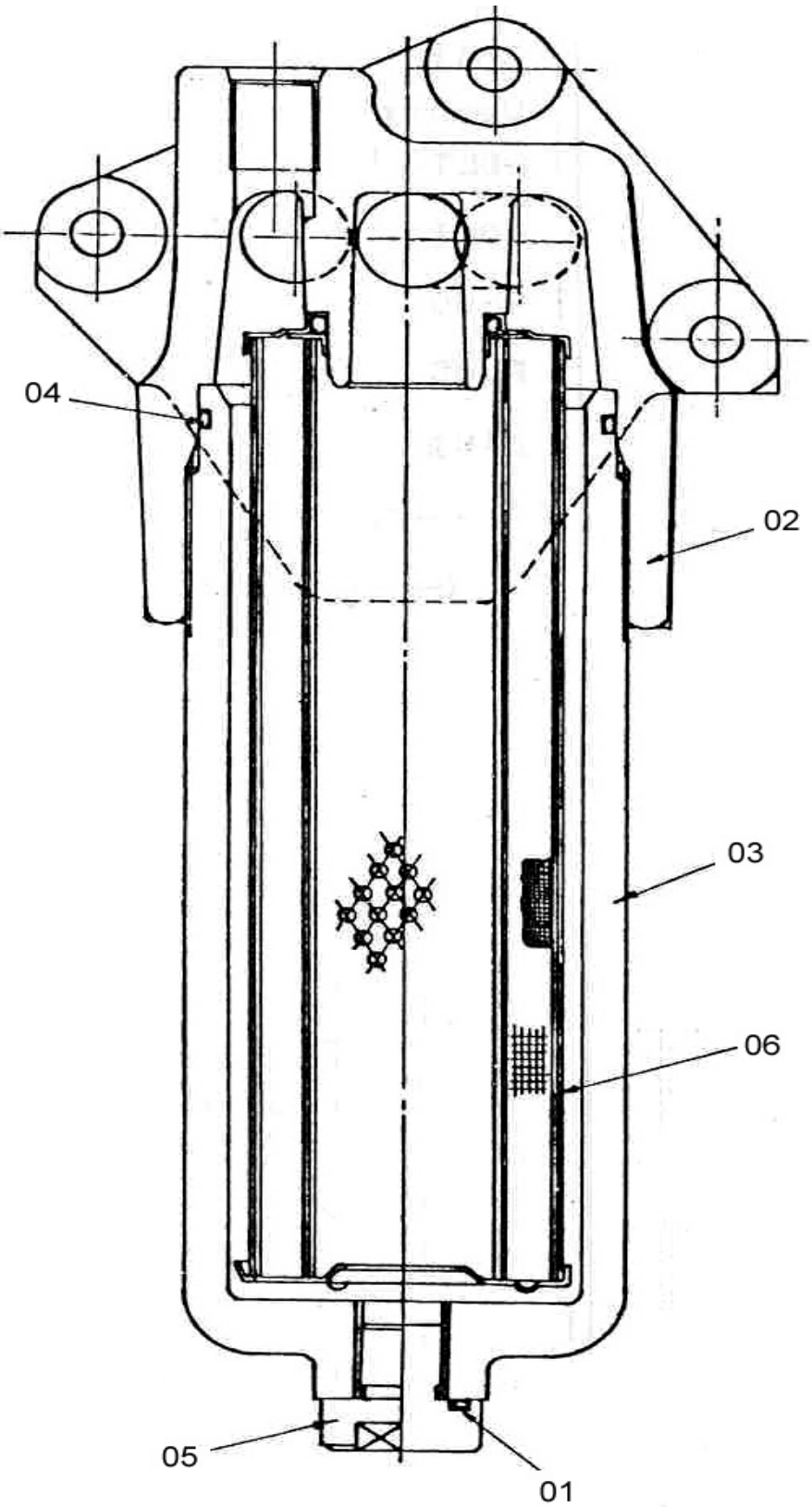

SLNO	PART NUMBER	DESCRIPTION	QTY	REMARKS
	953-TMB-0011	TORQUE FLOW ASSY		
	985-CV-01072	* TRANSMISSION CONTROL VALVE ASSY	1	
	561-15-55650	** FILTER ASSY	1	
01	985-CV-22838	*** O-RING	1	
02		*** FILTER HEAD	1	
03		*** FILTER CASE	1	
04	CHS01-12080	*** O-RING	1	
05		*** BOLT	1	
06	985-CV-92863	*** ELEMENT ASSY	1	

FIG. 54 HYDRAULIC PUMP ASSY. (TRANSMISSION)

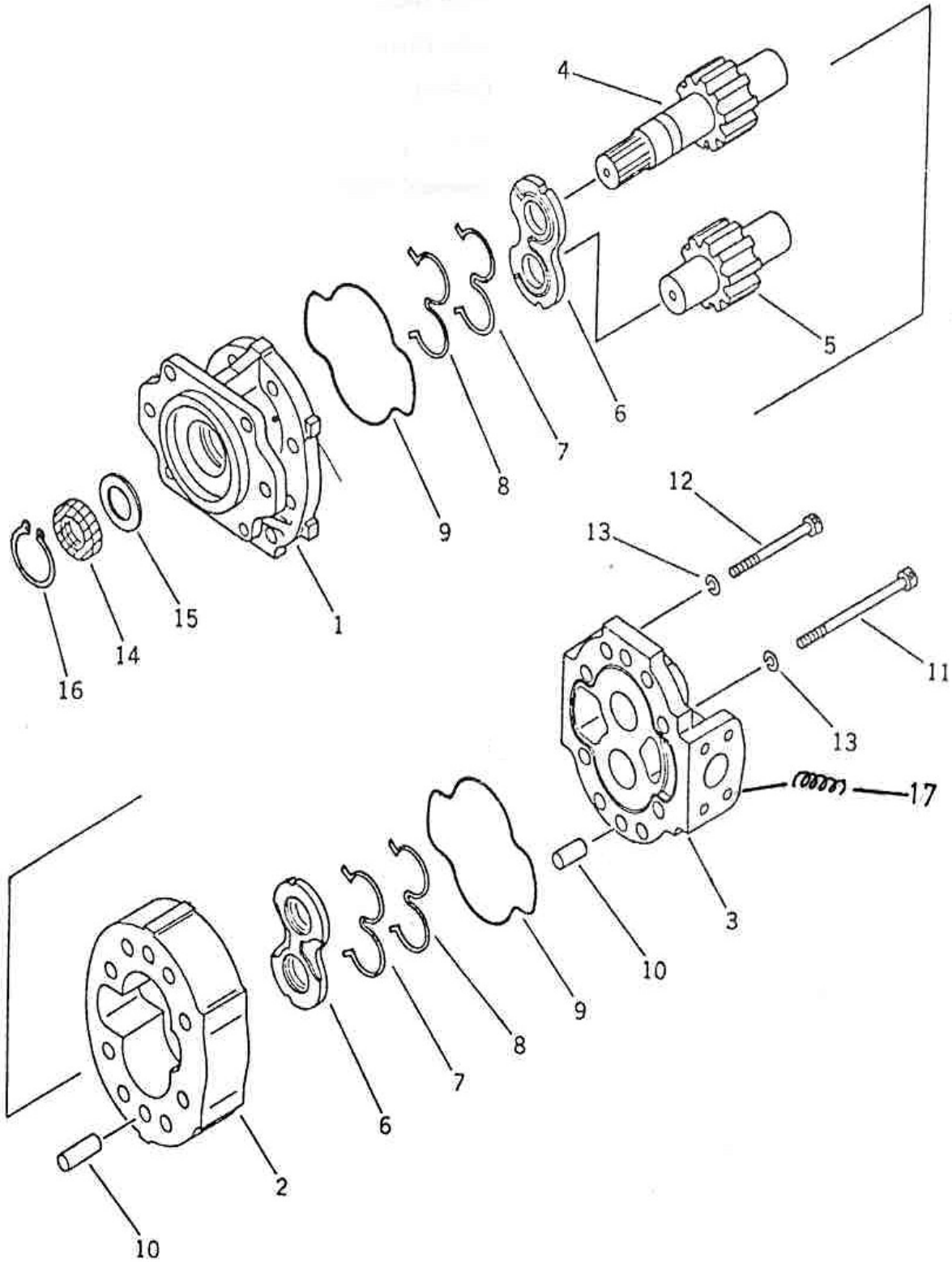

HYDRAULIC PUMP ASSY. (TRANSMISSION) **FIG NO. 54**

SLNO	PART NUMBER	DESCRIPTION	QTY	REMARKS
	953-TMB-0011	TORQUE FLOW ASSY		
	985-HM-01016	* PUMP ASSY	1	
01	985-HM-02004	** BRACKET	1	
02	985-HM-21112	** CASE GEAR	1	
03	985-HM-02012	** COVER	1	
04	985-HM-51123	** GEAR DRIVE	1	
05	985-HM-51131	** GEAR DRIVEN	1	
06	985-HM-21004	** PLATE,SIDE	2	
07	985-HM-61079	** SEAL	2	
08	985-HM-91057	** BACK,UP	2	
09	985-HM-61046	** O-RING	2	
10	CFP04-01842	** PIN,DOWEL	4	
11	985-HM-11093	** BOLT	4	
12	985-HM-11085	** BOLT	4	
13	CFW01-11442	** WASHER,SPRING	8	
14	985-HM-91032	** SEAL,OIL	1	
15	985-HM-11109	** PLATE	1	
16	CFL02-16220	** RING,SNAP	1	
17	CSP02-01208	** HELISERT	8	

FIG. 55 OIL FILTER

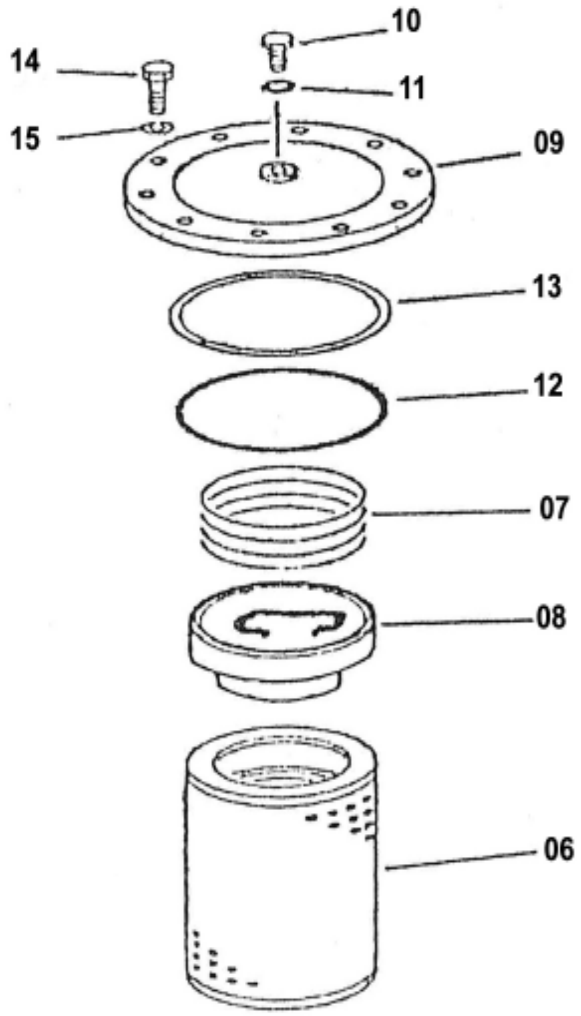

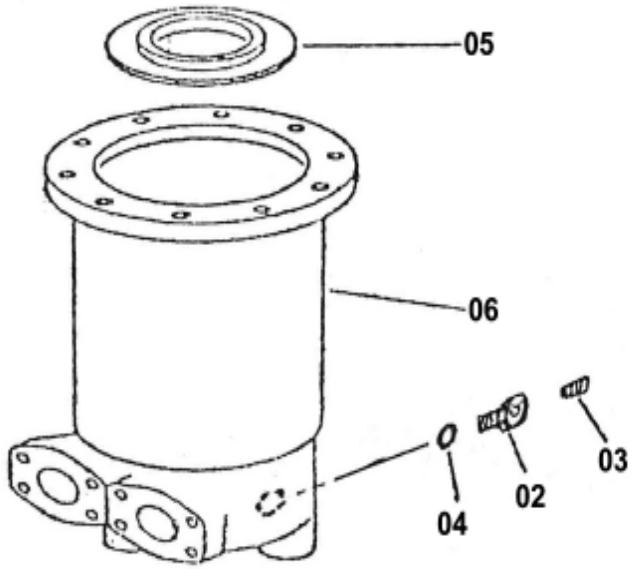

SLNO	PART NUMBER	DESCRIPTION	QTY	REMARKS
	985-HS-02053	FILTER ASSY	1	
01	985-HS-03017	* HOUSING	1	
02	985-HS-11288	* PLUG	1	
03	CPL01-20108	* PLUG	1	
04	CPL01-23022	* O-RING	1	
05	985-HS-11385	* WASHER	1	
06	985-HS-03058	* ELEMENT	1	SEE NOTE
07	985-TK-10534	* SPRING	1	
08	985-HS-03066	* VALVE ASSY	1	
09	985-HS-11303	* COVER	1	
10	985-HS-11296	* BOLT	1	
11	07000-22010	* O-RING	1	
12	07000-25165	* O-RING	1	
13	07001-05165	* RING,BACK-UP	1	
14	01010-51655	* BOLT	10	
15	01602-21648	* WASHER,SPRING	10	

INPLACE OF ELEMENT TO P/NO. 985-HS-03058 FLASHING ELEMENT TO P/NO. 985-HS-03099 SHOULD BE USED FOR INTIAL 1hr. AFTER OVERHAULING T/M

FIG. 56 TRANSMISSION FILTER PIPING (1/2)

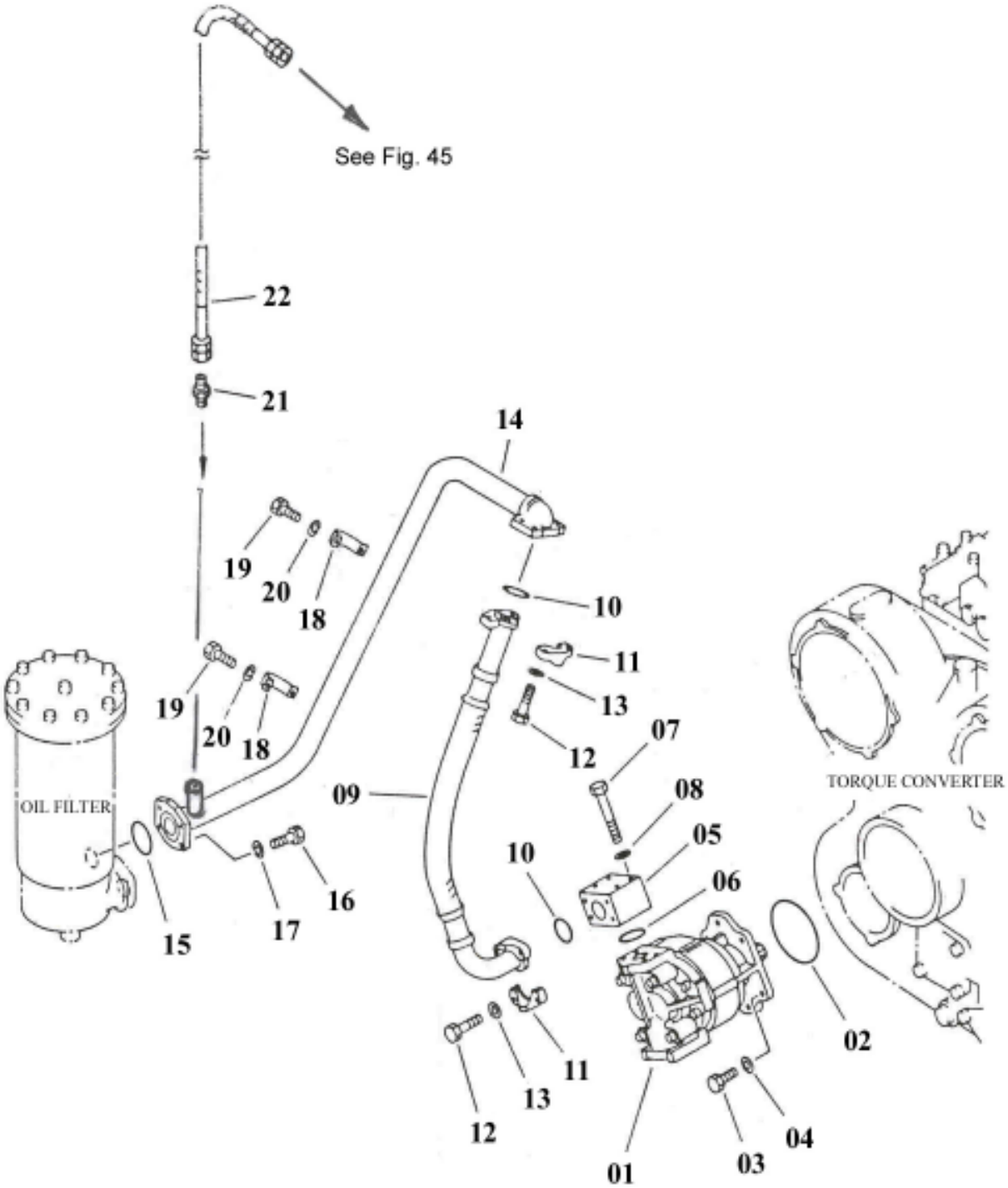

TRANSMISSION FILTER PIPING (1/2) **FIG NO. 56**

SLNO	PART NUMBER	DESCRIPTION	QTY	REMARKS
	953-OC-00017	TRANSMISSION PIPING		
01	705-12-44010	PUMP ASSY	1	
02	CHS01-12130	O-RING	1	
03	CFS01-31230	HEX. SCREW	4	
04	CFW01-11236	WASHER, SPRING	4	
05	985-PT-11086	BLOCK	1	
06	CHS01-13048	O-RING	1	
07	CFS01-31285	HEX. SCREW	4	
08	CFW05-12032	WASHER	4	
09	07118-01407	HOSE	1	
09	07118-01408	HOSE (WITH MUFFLER)	1	
10	CHS01-13048	O-RING	2	
11	07371-31465	FLANGE,SPLIT	4	
12	07372-21240	BOLT	8	
13	01643-51232	WASHER	8	
14	953-PT-02025	TUBE STR	1	
15	CHS01-12060	O-RING	1	
16	07372-21240	BOLT	4	
17	01602-21236	WASHER,SPRING	4	
18	07282-04311	CLIP	2	
19	CFS01-21020	HEX. SCREW	4	
20	CFW01-11030	WASHER,SPRING	4	
21	985-HS-11644	CONNECTOR	1	
22	452-PT-02094	HOSE ASSY	1	
	953-OC-01054	TRANS. FILTRATION I MPROVEMENT KIT		

FIG. 57 TRANSMISSION FILTER PIPING (2/2)

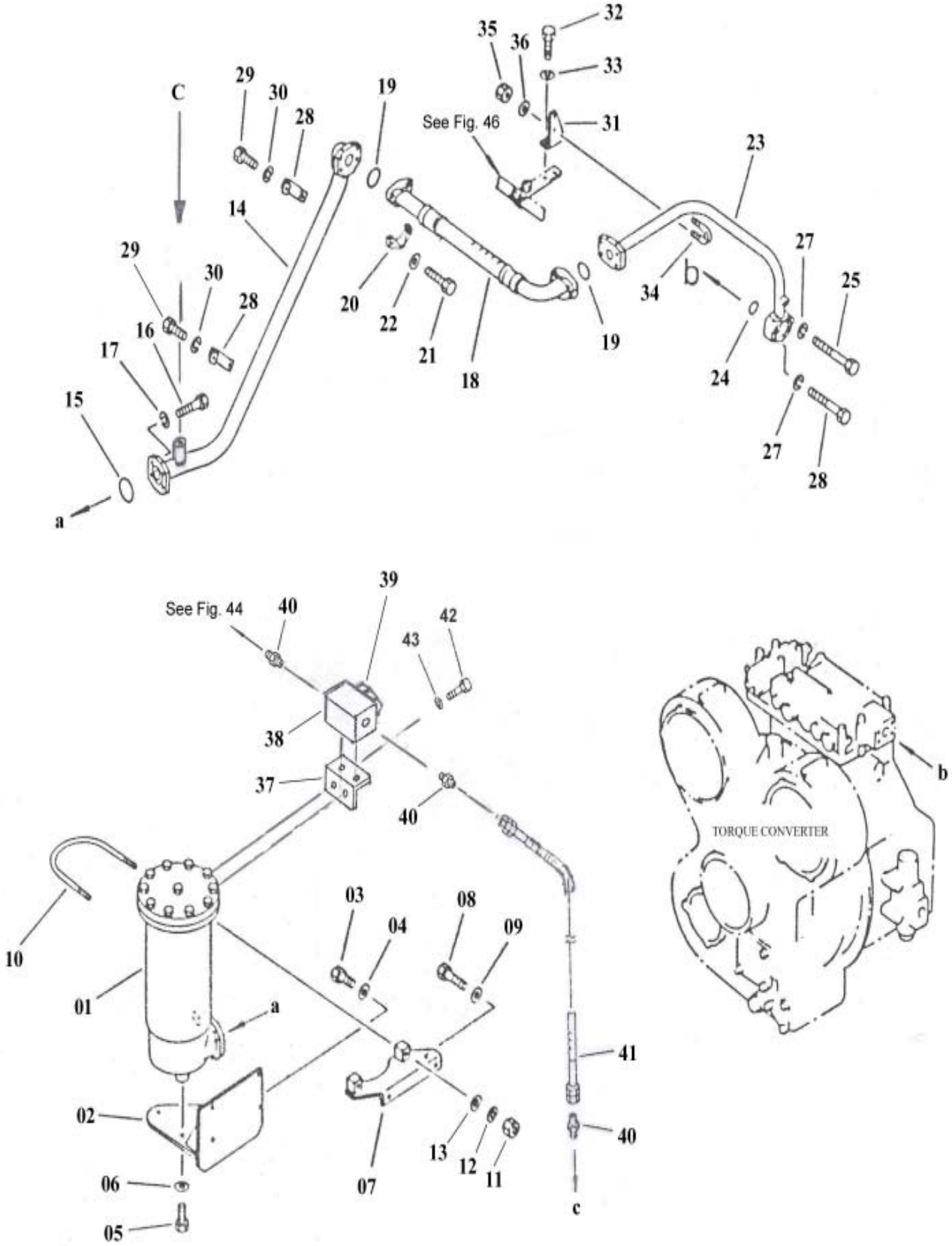

TRANSMISSION FILTER PIPING (2/2)

FIG NO. 57

SLNO	PART NUMBER	DESCRIPTION	QTY	REMARKS
01	985-HS-02053	FILTER ASSY	1	
02	985-HS-02061	BRACKET	1	
03	01010-51425	BOLT	4	
04	01643-31445	WASHER	4	
05	01010-51430	BOLT	3	
06	01643-31445	WASHER	3	
07	985-HS-02045	BRACKET	1	
08	01010-51425	BOLT	2	
09	01643-31445	WASHER	2	
10	985-HS-11044	U-BOLT	1	
11	01580-11210	NUT	2	
12	CFW01-11236	WASHER SPRING	2	
13	CFW05-12032	WASHER	2	
14	953-PT-02033	TUBE	1	
15	CHS01-12060	O-RING	1	
16	07372-21240	SCREW	4	
17	CFW01-11236	WASHER,SPRING	4	
18	07118-01406	HOSE	1	
19	CHS01-13048	O-RING	2	
20	07371-31465	FLANGE,SPLIT	4	
21	07372-21240	BOLT	8	
22	CFW05-12032	WASHER	8	
23	985-PT-02216	TUBE	1	
24	CHS01-13035	O-RING	1	
25	01010-51055	BOLT	2	
26	01010-51060	BOLT	2	
27	CFW01-11030	WASHER,SPRING	4	
28	07282-04311	CLIP	2	
29	01010-51020	BOLT	4	
30	CFW01-11030	WASHER,SPRING	4	
31	985-PT-11053	BRACKET	1	
32	01010-51235	BOLT	2	
33	01602-21236	WASHER,SPRING	2	
34	07283-23442	CLIP	1	
35	01599-01011	NUT	2	
36	01643-31032	WASHER	2	

FIG. 57 TRANSMISSION FILTER PIPING (2/2)

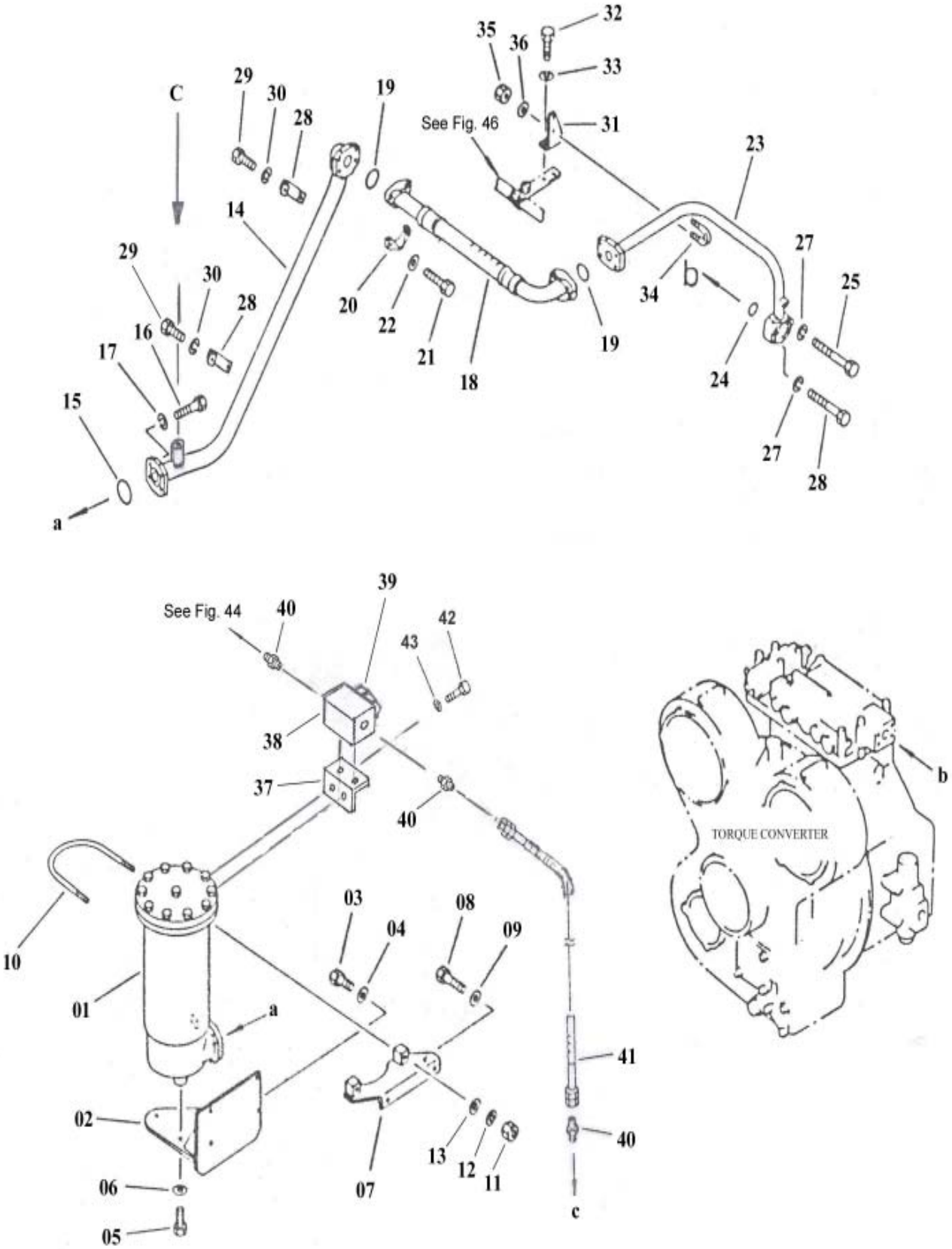

SLNO	PART NUMBER	DESCRIPTION	QTY	REMARKS
37	985-HS-11628	BRACKET	1	
38	985-HS-11611	REMOTE DELTA DYNE BLOCK	1	
39	953-OC-11082	VISUAL DO. INDICATOR	1	
40	985-HS-11644	CONNECTOR	1	
41	452-PT-02094	HOSE ASSY	1	
42	CFS01-20620	HEX. SCREW	2	
43	CFW01-10619	WASHER,SPRING	2	
	953-OC-01054	TRANS. FILTRATION IMPROVEMENT KIT		

FIG. 58 TRANSMISSION COOLING PIPING (1/2)

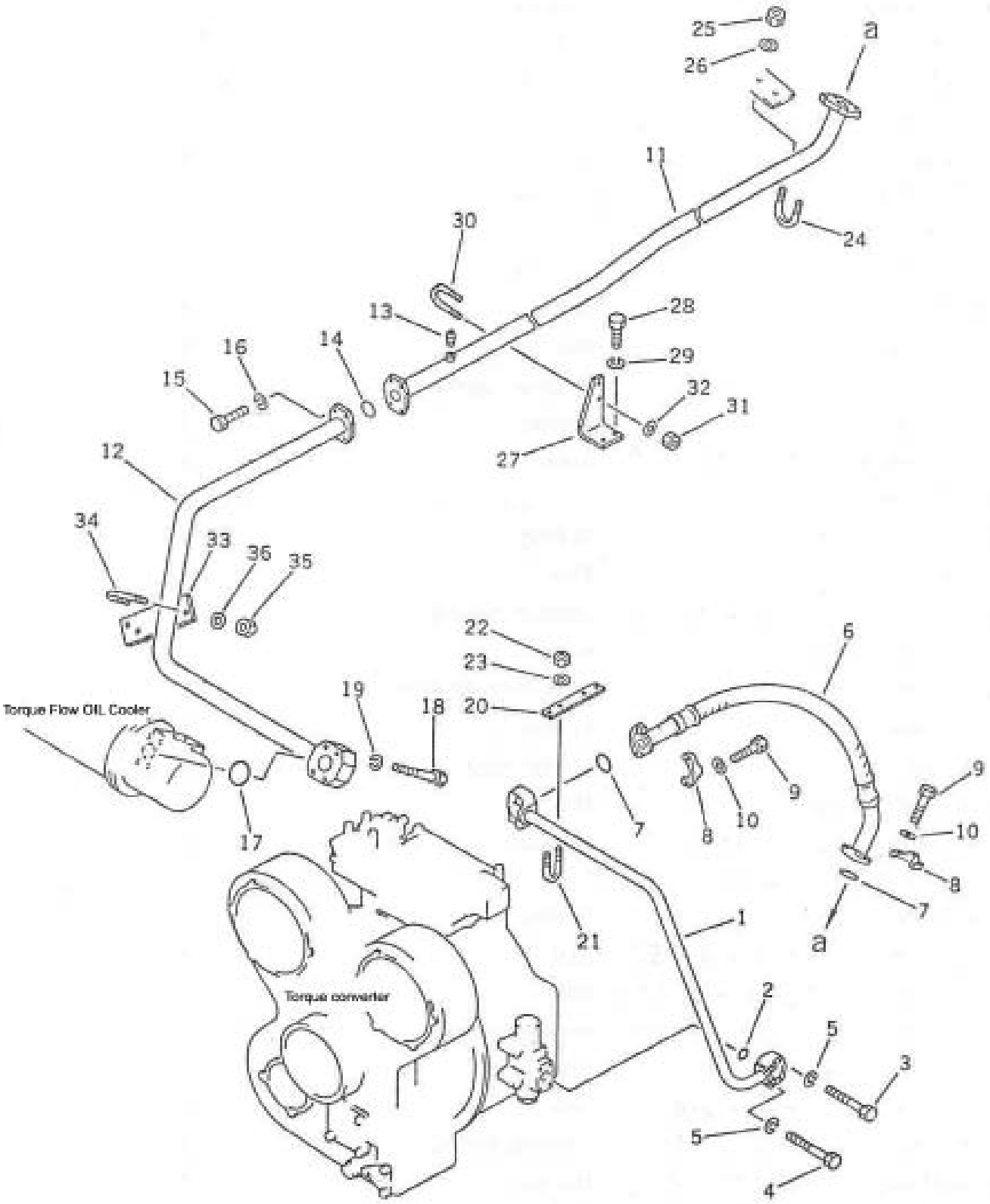

SLNO	PART NUMBER	DESCRIPTION	QTY	REMARKS
	953-OC-00017	TRANSMISSION COOLING PIPING INST.		
01	985-PT-02192	TUBE	1	
02	CHS01-13035	O-RING	1	
03	01010-51055	BOLT	2	
04	01010-51060	BOLT	2	
05	01602-21030	WASHER,SPRING	4	
06	07114-01410	HOSE	1	
07	CHS01-13048	O-RING	2	
08	07371-31465	FLANGE,SPLIT	4	
09	07372-21240	SCREW	8	
10	01643-51232	WASHER	8	
11	953-OC-01038	TUBE	1	
12	953-OC-01021	TUBE	1	
13	07042-20108	PLUG	1	
14	CHS01-13048	O-RING	1	
15	07372-21240	BOLT	4	
16	01602-21236	WASHER,SPRING	4	
17	07000-12060	O-RING	1	
18	01010-51280	BOLT	4	
19	CFW01-11236	WASHER,SPRING	4	
20	985-PT-11037	PLATE	1	
21	07283-23442	CLIP	1	
22	01599-01011	NUT	2	
23	CFN05-11032	WASHER	2	
24	07283-24346	CLIP	1	
25	01599-01011	NUT	2	
26	01643-31032	WASHER	2	
27	985-PT-11029	BRACKET	1	
28	CFS01-31230	HEX. SCREW	2	
29	01602-21236	WASHER,SPRING	2	
30	07283-24346	CLIP	1	
31	01599-01011	NUT	2	
32	01643-31032	WASHER	2	
33	985-PT-11012	BRACKET	1	
34	07283-24346	CLIP	1	
35	01599-01011	NUT	2	
36	01643-31032	WASHER	2	

FIG. 59 TRANSMISSION COOLING PIPING (2/2)

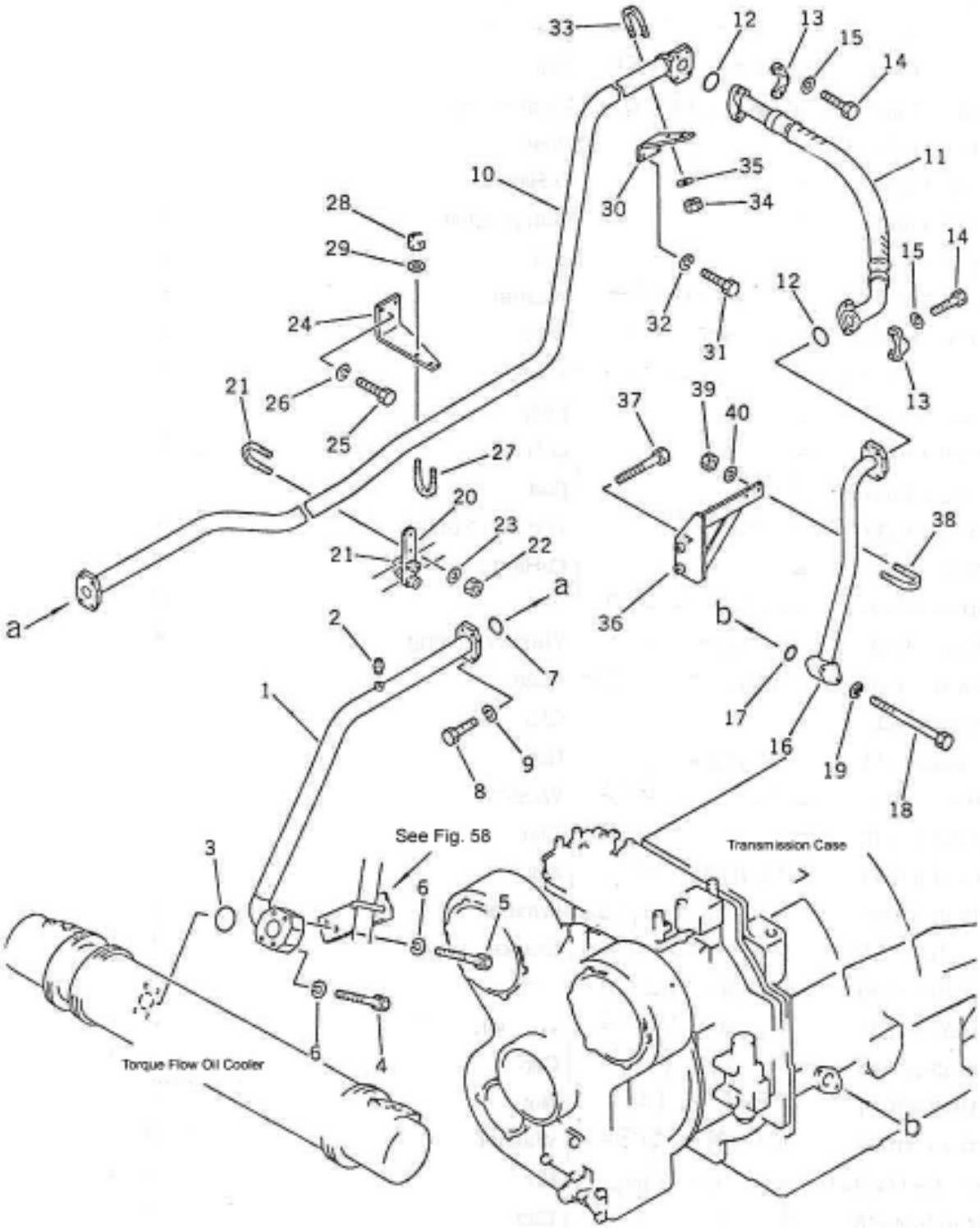

SLNO	PART NUMBER	DESCRIPTION	QTY	REMARKS
	953-OC-00017	TRANSMISSION COOLING PIPING INST.		
01	985-PT-02638	TUBE	1	
02	CPL01-20108	PLUG	1	
03	CHS01-12060	O-RING	1	
04	01010-51280	BOLT	2	
05	01010-51285	BOLT	2	
06	01602-21236	WASHER,SPRING	4	
07	07000-13048	O-RING	1	
08	07372-21240	BOLT	4	
09	01602-21236	WASHER,SPRING	4	
10	953-OC-01021	TUBE	1	
11	07114-01410	HOSE	1	
12	07000-13048	O-RING	2	
13	07371-31465	FLANGE,SPLIT	4	
14	07372-21240	BOLT	8	
15	01643-51232	WASHER	8	
16	985-PT-02208	TUBE	1	
17	07000-13035	O-RING	1	
18	01011-51010	BOLT	2	
19	01602-21030	WASHER,SPRING	2	
20	985-PT-11094	PLATE	1	
21	07283-24346	CLIP	2	
22	01599-01011	NUT	4	
23	01643-31032	WASHER	4	
24	985-PT-11061	BRACKET	1	
25	01010-51230	BOLT	2	
26	01602-21236	WASHER,SPRING	2	
27	07283-24346	CLIP	1	
28	01599-01011	NUT	2	
29	01643-31032	WASHER	2	
30	985-PT-11045	BRACKET	1	
31	01010-51230	BOLT	2	
32	01602-21236	WASHER,SPRING	2	
33	07283-24346	CLIP	1	
34	01599-01011	NUT	2	

FIG. 59 TRANSMISSION COOLING PIPING (2/2)

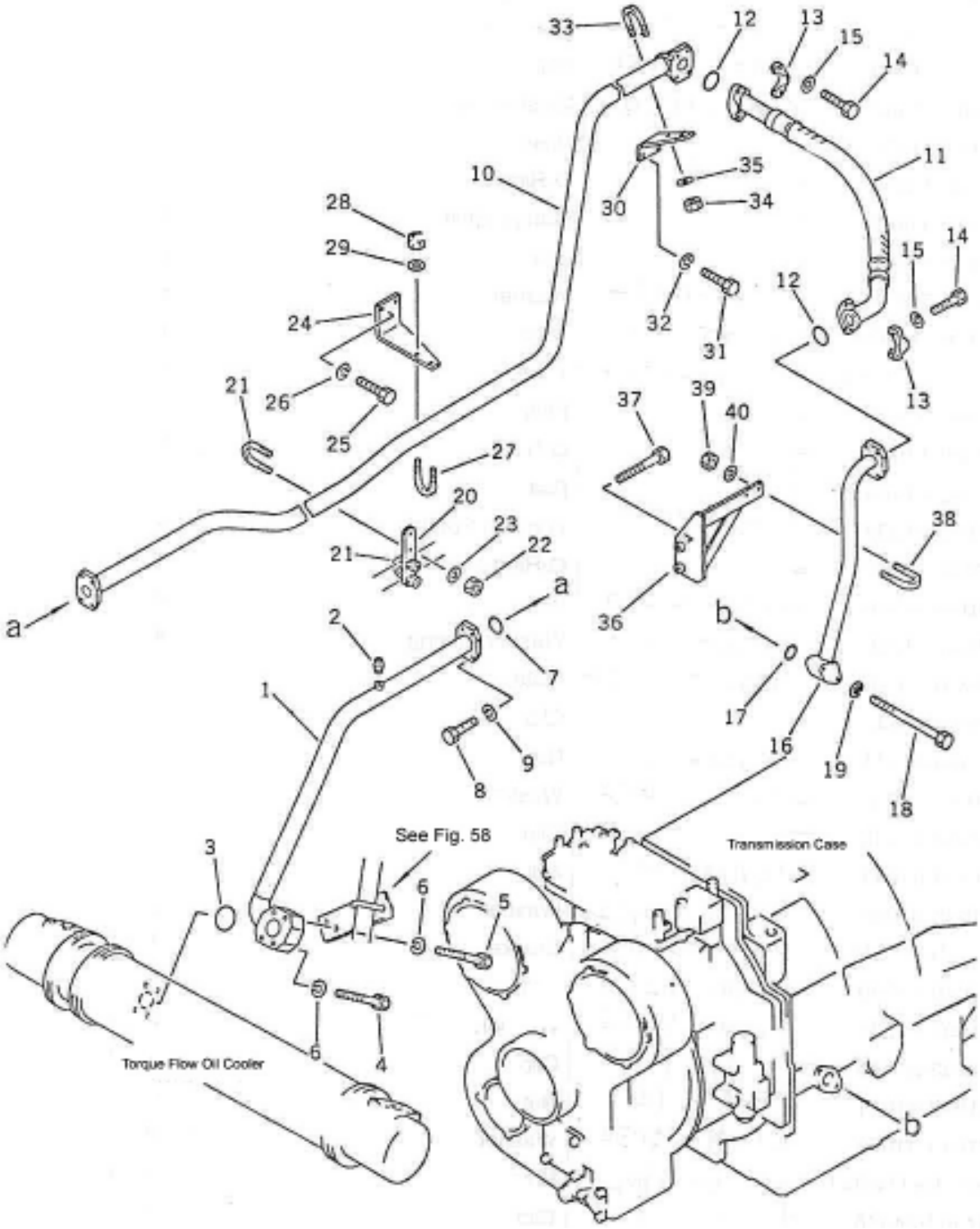

SLNO	PART NUMBER	DESCRIPTION	QTY	REMARKS
35	01643-31032	WASHER	2	
36	985-PT-02224	BRACKET	1	
37	01010-51680	BOLT	2	
38	07283-23442	CLIP	1	
39	01599-01011	NUT	2	
40	01643-31032	WASHER	2	
	953-OCB-0024	O-RING KIT		
	953-OCB-0032	HOSE KIT		

FIG. 60 TRANSMISSION COOLING PIPING (1/2) (PALL FILTER)

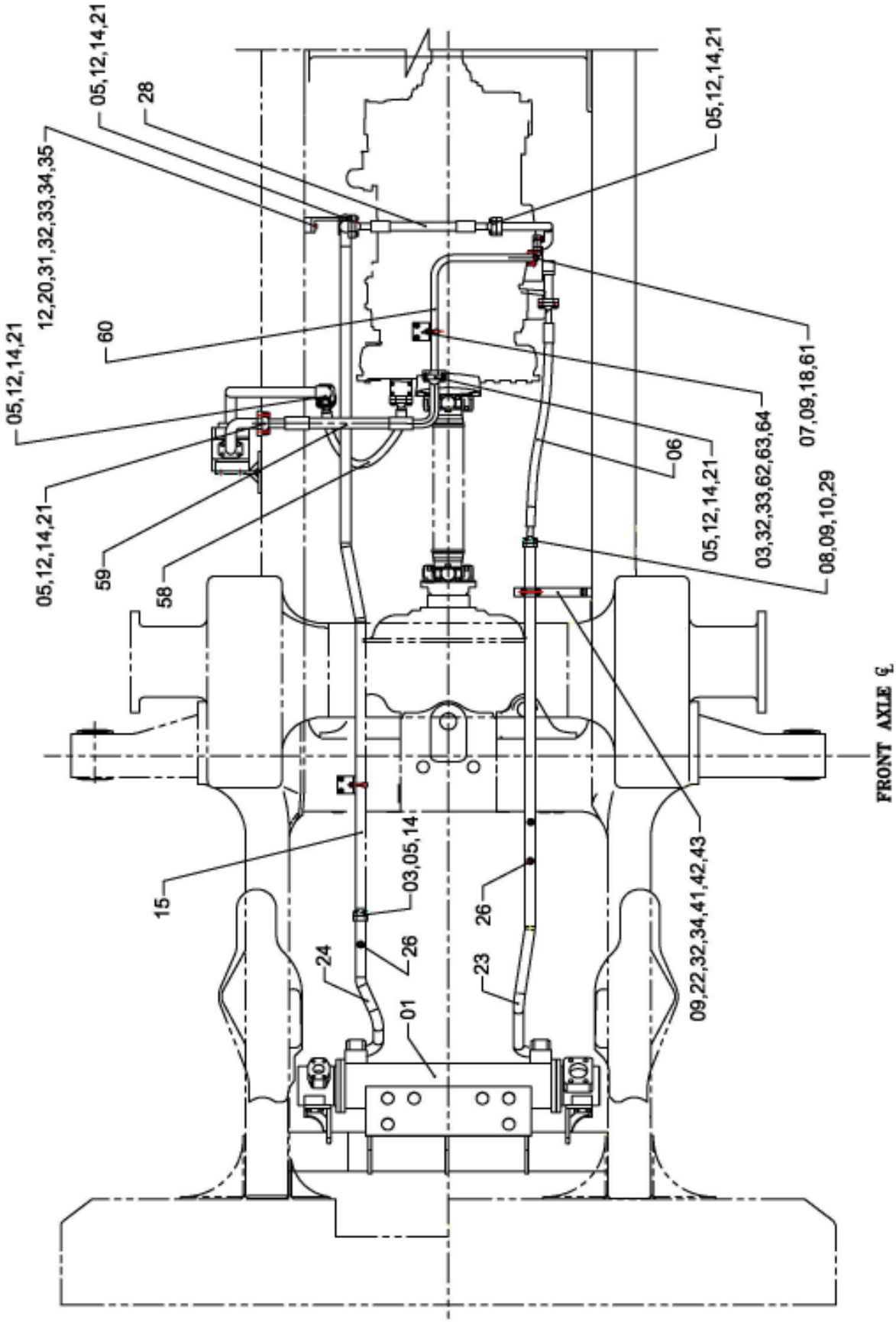

TRANSMISSION COOLING PIPING (1/2) (PALL FILTER) **FIG NO. 60**

SLNO	PART NUMBER	DESCRIPTION	QTY	REMARKS
	953-OC-00017	TRANSMISSION COOLING PIPING INST.		
01	953-OC-02156	TORQUE FLOW-OIL COOLER ASSY	1	
02	CFS01-31245	M12 HEX SCREW	8	
03	CFW01111236	SPRING WASHER	30	
04	CHS01-72075	O-RING	2	
05	CFB27-11240	BOLT	32	
06	CHH26-12011	HOSE ASSY	1	
07	CFB01-21055	BOLT	6	
08	CHS01-33035	O-RING	3	
09	CFW01-11030	SPRING WASHER	20	
10	CFG01-12051	FLANGE	6	
11	985-PT-11086	BLOCK	1	
12	CFW04-12032	WASHER	30	
13	CFB01-21285	BOLT	4	
14	CHS01-13048	O-RING	7	
15	953-OC-02042	TUBE STR	1	
16	CFB01-21280	BOLT	8	
17	CHS01-12060	O-RING	4	
18	CHS01-33032	O-RING	2	
19	CFB02-21010	BOLT	4	
20	CPW35-12080	TAPPED PAD	1	
21	CFG03-24061	FLANGE	12	
22	953-OC-11399	PLATE	1	
23	953-OC-02172	TUBE ASSY	1	
24	953-OC-02189	TUBE ASSY	1	
25	985-PT-02662	TUBE ASSY	1	
26	CPL01-20810	PLUG	2	
27	985-HM-01008	PUMP ASSY	1	
28	CHH26-12407	HOSE ASSY	1	
29	CFB01-11040	BOLT	8	
30	953-OC-02334	TUBE STR	1	
31	985-PT-11029	BRACKET	2	
32	CFW05-10032	WASHER	10	
33	CFN28-21011	NYLOCK NUT	8	
34	CCC07-24346	CLIP	3	

FIG. 60 TRANSMISSION COOLING PIPING (2/2) (PALL FILTER)

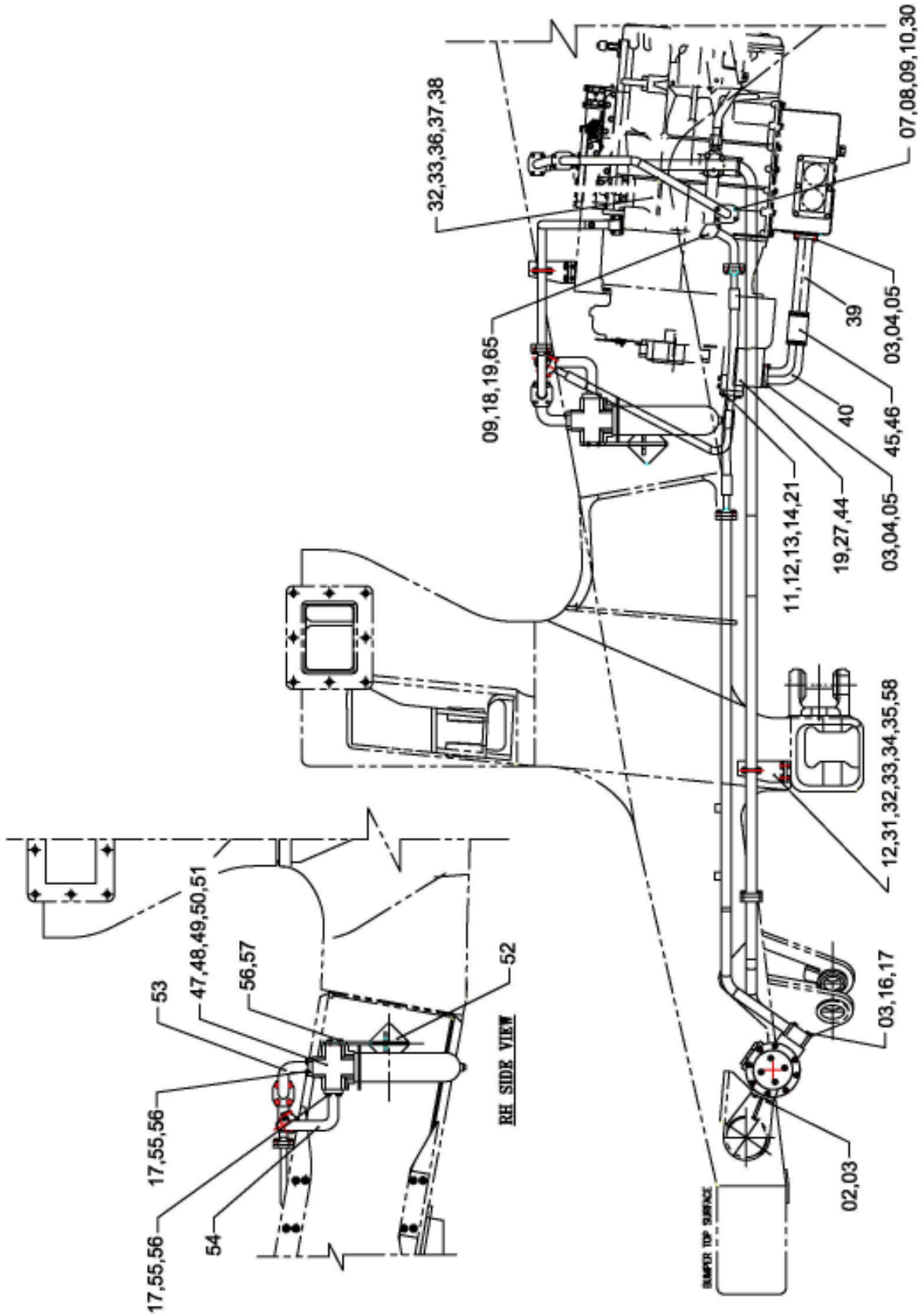

SLNO	PART NUMBER	DESCRIPTION	QTY	REMARKS
35	CFS01-31230	SCREW	8	
36	CCC07-23442	CLIP	1	
37	985-PT-02224	BRACKET	1	
38	CFB01-21680	BOLT	2	
39	985-ZZ-10853	TUBE	1	
40	985-ZZ-10861	TUBE	1	
41	CFN28-21011	NUT NYLOCK	2	
42	CFB0111030	BOLT	2	
43	CPW35-10070	TAPPED PAD	1	
44	CHS01-12130	O-RING	1	
45	CHH30-07422	HOSE ASSY	1	
46	953-HS-03175	CLIP	2	
47	953-OC-02212	FILTER ASSY	1	
48	953-OC-11447	FILTER ELEMENT (FINAL)	1	
49	953-SK-00087	SEAL KIT	1	
50	953-OC-11439	CLOGGING INDICATOR	1	
51	953-OC-11414	FILTER ELEMENT (FLUSHING)	1	
52	953-OC-02164	BRACKET	1	
53	953-OC-02197	TUBE STR	1	
54	953-OC-02204	TUBE STR	1	
55	CFB25-21345	BOLT	8	
56	CFW01-11338	SPRING WASHER	12	
57	CFB25-21345	BOLT	4	
58	CHH15-02407	HOSE ASSY	1	
59	CHH15-02406	HOSE ASSY	1	
60	953-OC-02229	TUBE STR	1	
61	CFB01-21060	BOLT	2	
62	985-PT-11503	BRACKET	1	
63	CCC07-23442	CLIP	1	
64	CFS01-31235	M12, SCREW	2	
65	953-OC-02342	TUBE STR	1	

FIG. 66 FRONT AXLE

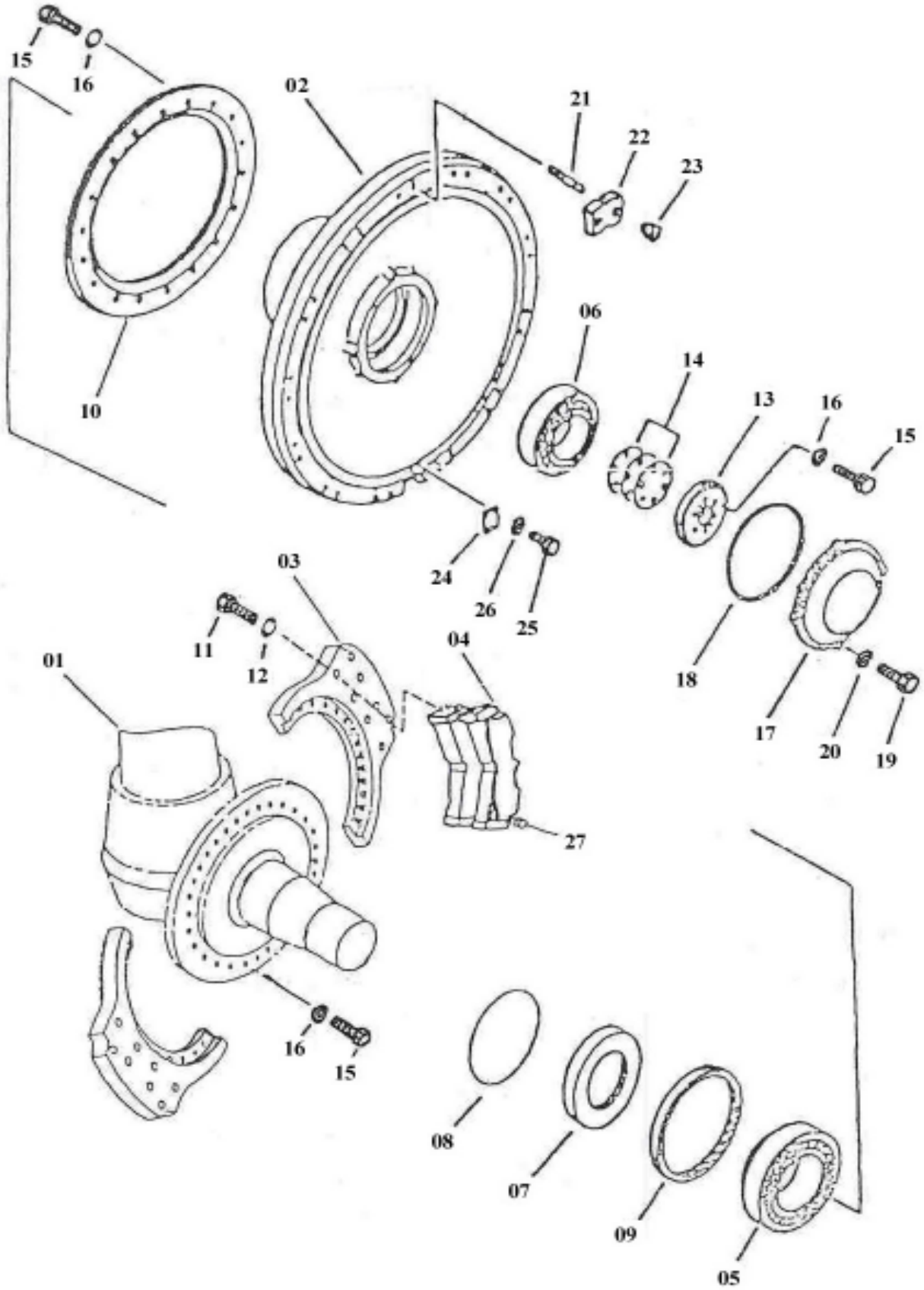

SLNO	PART NUMBER		DESCRIPTION	QTY	REMARKS
	953-AX-01037		FRONT AXLE ASSY	2	
01	953-SU-01012		FRONT SUSPENSION	2	
02	985-AX-32195		WHEEL HUB	2	
03	985-AX-12211		CALIPER MTG.PLATE	4	
04	985-AX-02054		BRAKE HEAD ASSY	4	
05	778-AX-92189		BEARING	2	
06	985-AX-95513		BEARING	2	
07	953-AX-11024		RETAINER	2	
08	07000-05290	*	O-RING	2	
09	985-AX-02062	*	SEAL OIL	2	
10	985-AX-12228		DISC	2	
11	985-AX-12236		BOLT	16	
12	CFW05-33090		WASHER	16	
13	985-AX-13921		RETAINER	2	
14	985-AX-13954	*	SHIM, t=1.0	AR	
14	985-AX-13946	*	SHIM, t=1.2	AR	
14	985-AX-13938	*	SHIM, t=1.3	AR	
15	CFB01-22470		BOLT	120	
16	CFW05-24060		WASHER	120	
17	985-AX-33912		COVER	2	
18	07000-05315		O-RING	2	
19	CFS01-21230		BOLT	8	
20	CFW01-11236		WASHER,SPRING	8	
21	985-AX-12285		WHEEL STUD	52	
22	985-AX-55289		CLAMP	26	
23	985-AX-15306		NUT	52	
24	985-AX-13962		VALVE PLATE	2	
25	CFS01-21020		BOLT	4	
26	CFW01-11030		WASHER,SPRING	4	
27	375-AX-61728		CAP	12	

FIG. 67 BRAKE HEAD ASSY.

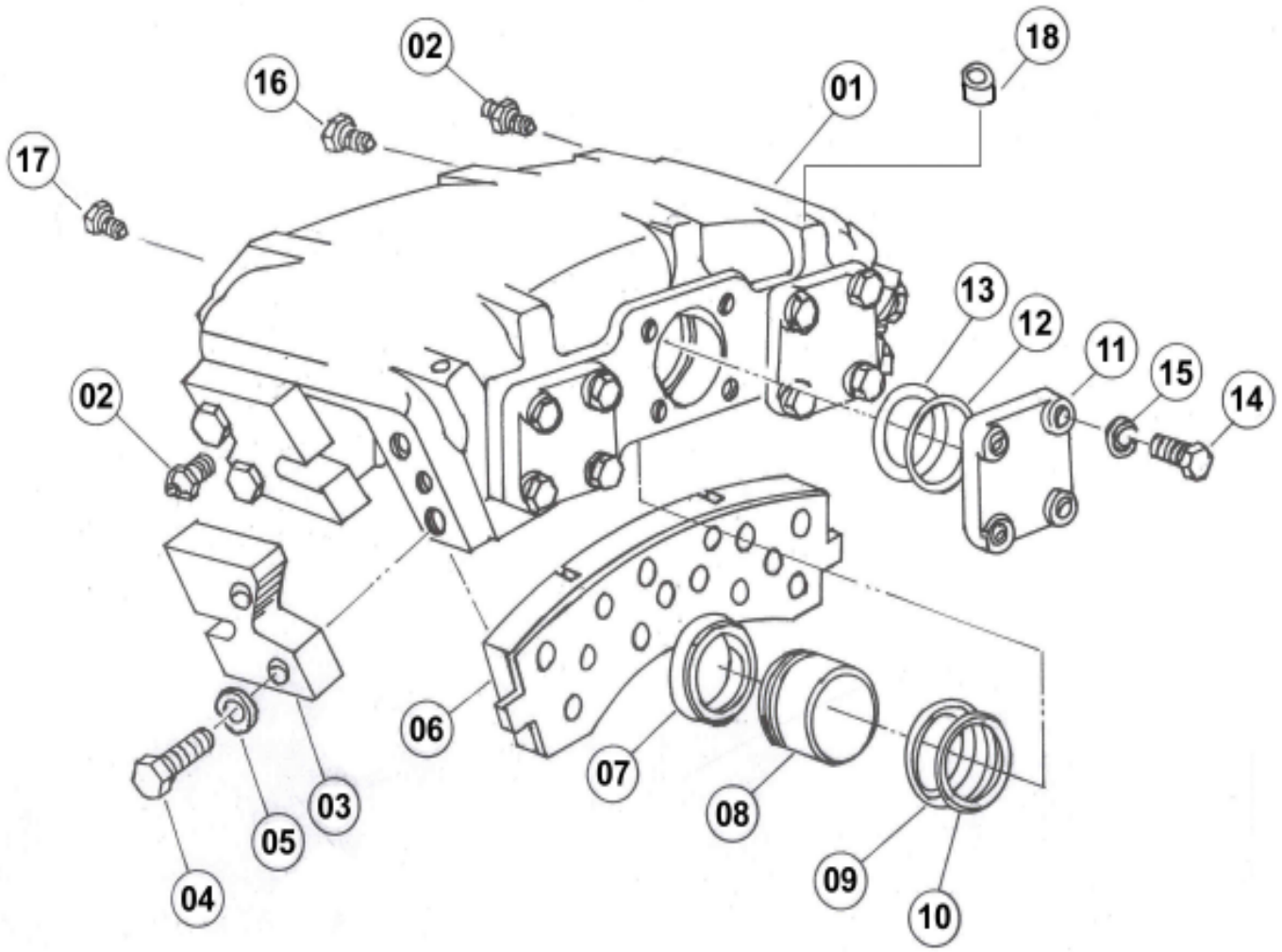

BRAKE HEAD ASSY.

FIG NO. 67

SLNO	PART NUMBER		DESCRIPTION	QTY	REMARKS
	985-AX-02054		BREAK HEAD ASSY	1	
01	985-AX-13013	*	TORQUE PLATE ASSY	1	
02	985-AX-13021	*	VALVE HYD.BLEEDER	3	
03	985-AX-13038	*	THRUST PLATE	4	
04	985-AX-13046	*	BOLT	8	
05	985-AX-13054	*	WASHER,SPRING	8	
06	985-AX-13062	*	CARRIER /LINING SET	1	
07	985-AX-63072	*	BOOT (KIT)	6	
08	985-AX-13087	*	PISTON	6	
09	985-AX-13095	*	RETAINER (KIT)	6	
10	985-AX-73108	*	PACKING	6	
11	985-AX-13119	*	CAP	3	
12	985-AX-13127	*	RETAINER (KIT)	3	
13	985-AX-73132	*	PACKING (KIT)	3	
14	985-AX-13143	*	BOLT	12	
15	985-AX-13151	*	WASHER,SPRING	12	
16	985-AX-13168	*	PLUG	3	
17	985-AX-13176	*	PLUG	1	
18	985-AX-13184	*	PLUG	10	
	985-AX-03001		OVERHAUL KIT		
	985-AX-03018		SEAL KIT		

SL.NO. 01 NOT SERVICE SEPARATELY

FIG. 68 REAR AXLE ASSY.

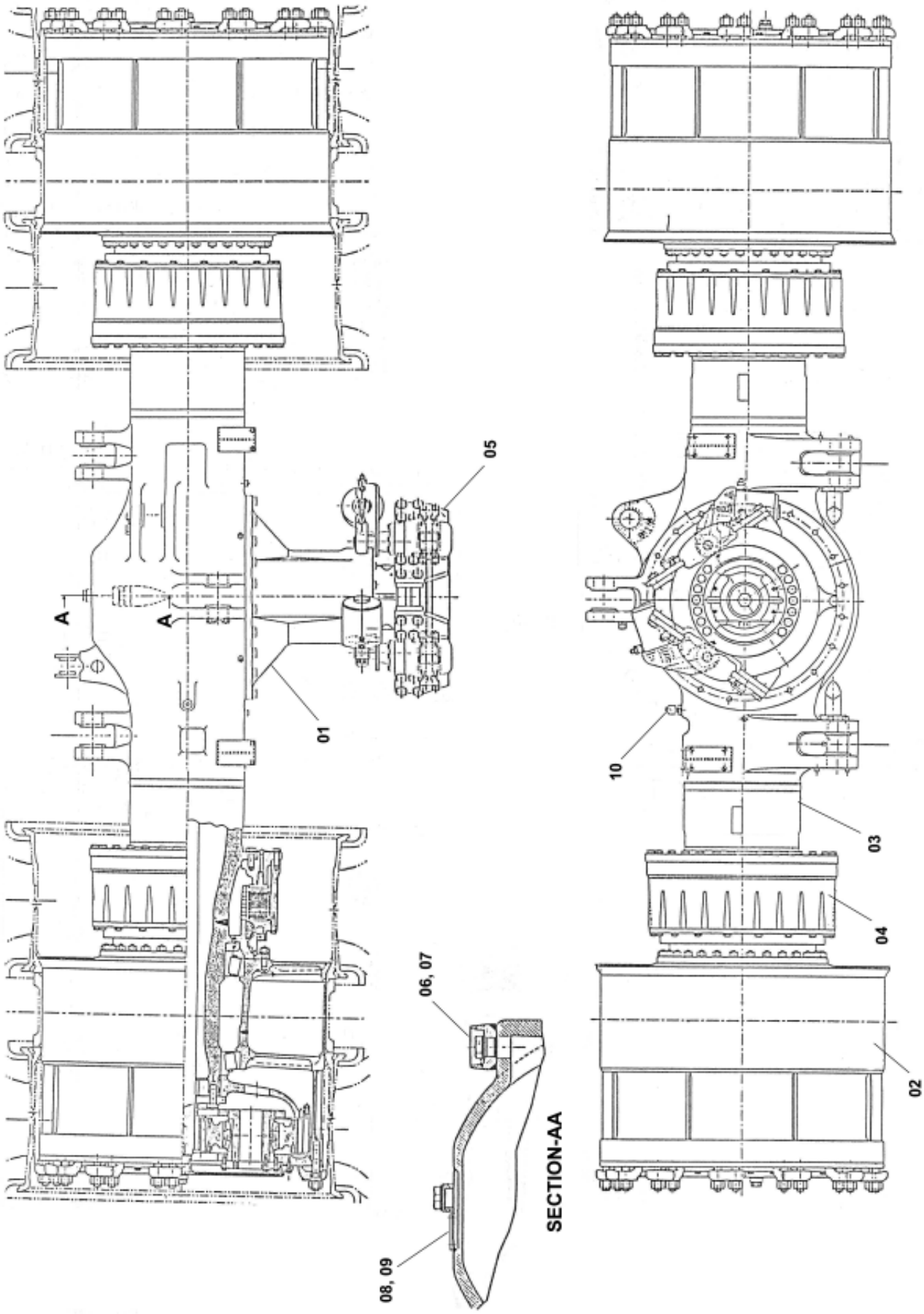

REAR AXLE ASSY.

FIG NO. 68

SLNO	PART NUMBER		DESCRIPTION	QTY	REMARKS
	953-AX-01004		REAR AXLE ASSY		
01	953-AX-02009	*	DIFFERENTIAL ASSY	1	
02	953-AX-02025	*	AXLE BEAM ASSY	1	
03	953-AX-02043	*	REAR BRAKE ASSY	2	
04	953-AX-02017	*	FINAL DRIVE ASSY	2	
05	953-AX-02058	*	PARKING BRAKE ASSY	1	
06	CPL03-13620	*	MAGNETIC PLUG	2	
07	07002-13624	*	O-RING	2	
08	355-AX-25575	*	NAME PLATE	1	
09	CFS33-13052	*	HEX SCREW	4	
10	CRB01-13052	*	BREATHER	1	

FIG. 69 AXLE BEAM ASSY.

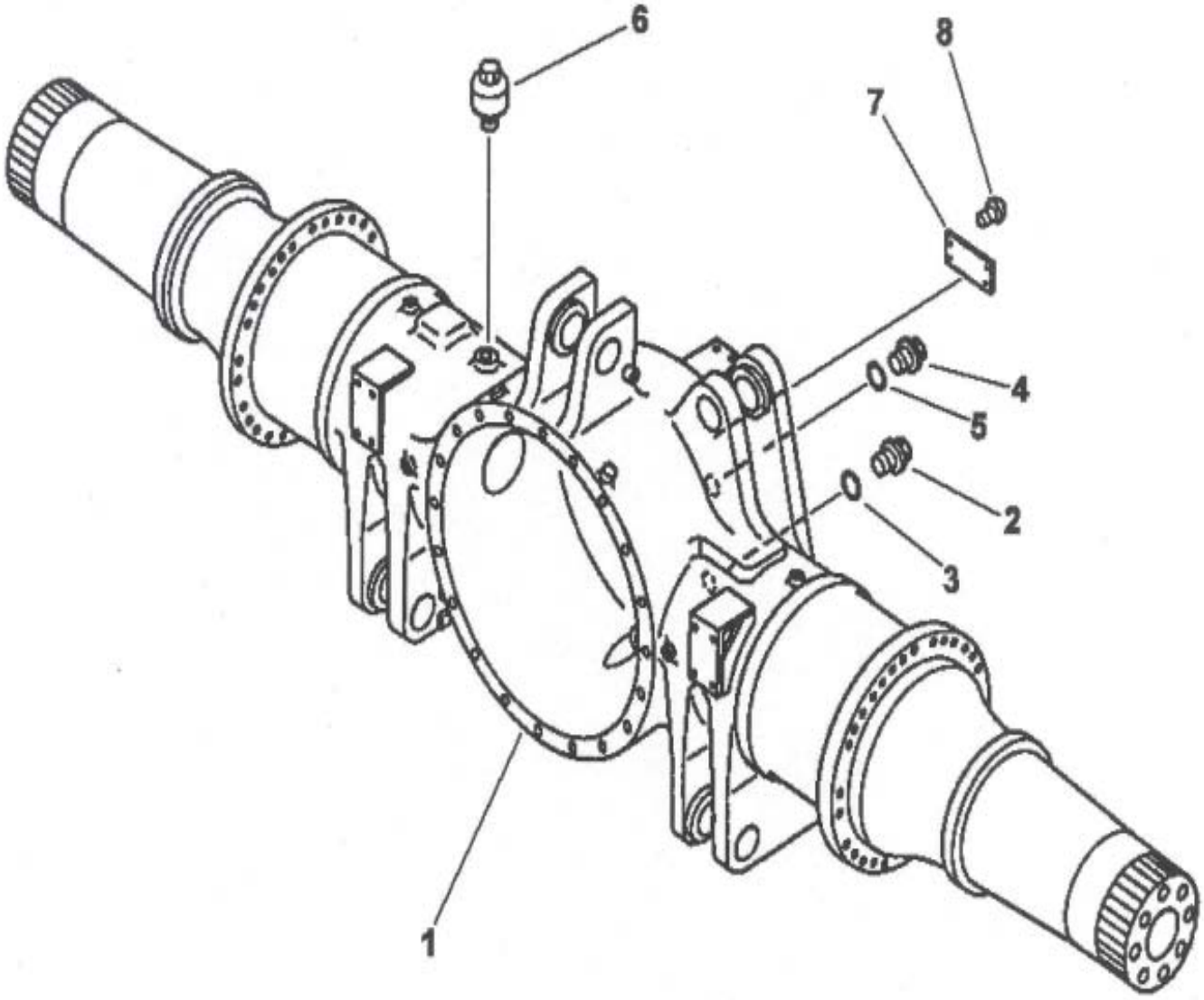

AXLE BEAM ASSY.

FIG NO. 69

SLNO	PART NUMBER	DESCRIPTION	QTY	REMARKS
01	953-AX-02025	AXLE BEAM ASSY	1	
02	CPL01-13620	PLUG	1	
03	07002-13634	O-RING	1	
04	CPL03-13620	PLUG	1	
05	07002-13634	O-RING	1	
06	CRB01-13052	BREATHER	1	
07	355-AX-25575	NAME PLATE	1	
08	CFS33-03060	HEX. SCREW	4	

FIG. 70 DIFFERENTIAL ASSY.

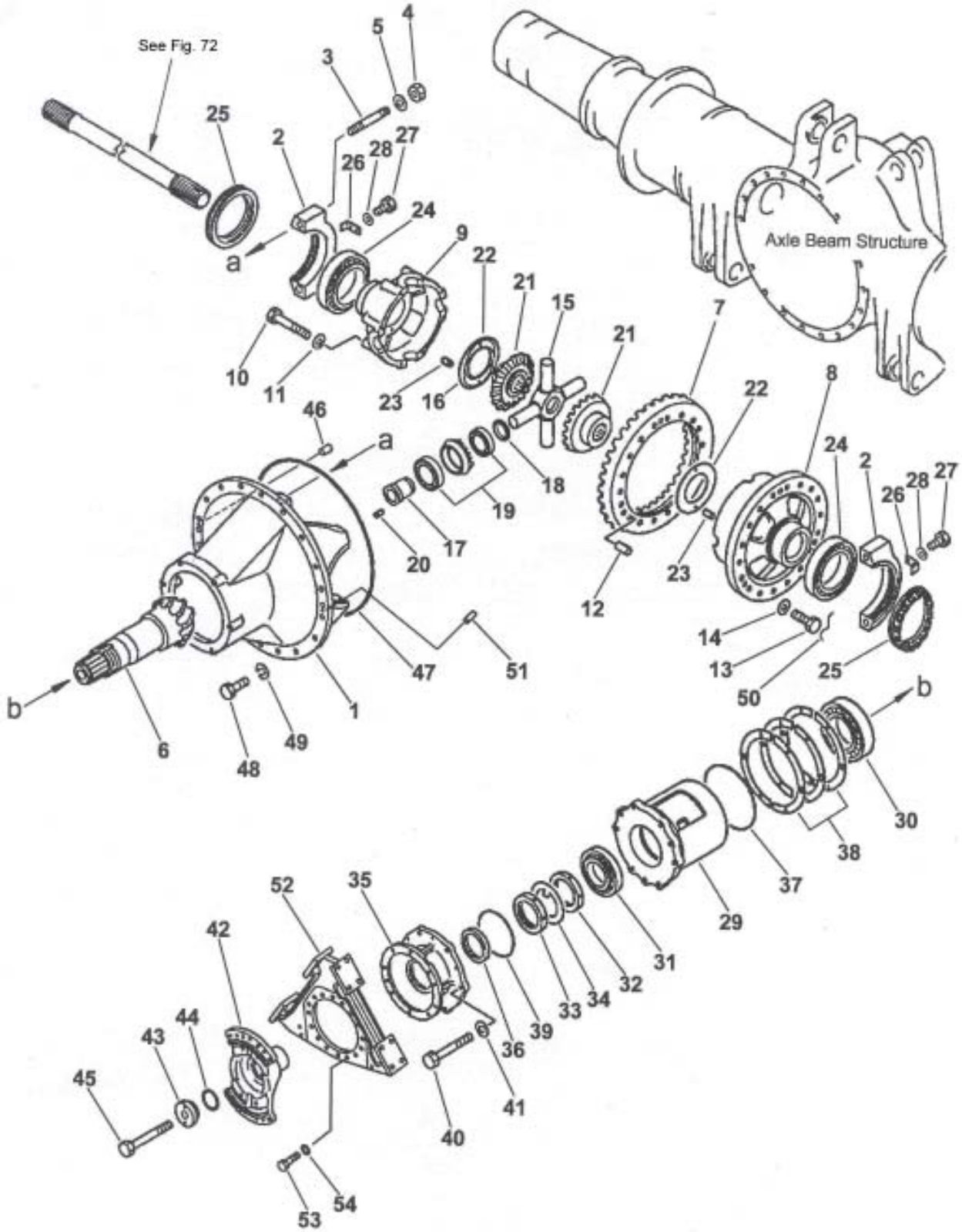

SLNO	PART NUMBER		DESCRIPTION	QTY	REMARKS
	953-AX-02009		DIFFERENTIAL ASSY	1	
01	985-AXB-9052	*	CASE DIFFERENTIAL	1	
01	(*953-AX-42007)	**	CASE DIFFERENTIAL	1	
02	(*985-AX-45714)	**	CAP BEARING	2	
03	CFT10-63680	**	STUD	4	
04	CFN04-13629	*	NUT	4	
05	CFW05-36090	**	WASHER	4	
06	985-AX-03675	**	BEVEL SET	1	
06	(*985-AX-56488)	*	BEVEL PINION	1	
07	(*985-AX-56463)	**	BEVEL GEAR	1	
08	985-AXB-9069	**	CASE ASSY	1	
08	(*985-AX-46549)	*	CASE	1	
09	(*985-AX-46638)	*	CASE	1	
10	CFB02-22450	*	BOLT	8	
11	CFW05-24060	*	WASHER	8	
12	985-AX-15655	*	PIN, DOWEL	3	
13	985-AX-15971	*	BOLT	21	
14	CFW05-24060	*	WASHER	21	
15	985-AX-55523	**	SHAFT	1	
16	985-AX-04517	**	PINION ASSY	4	
16	985-AX-55589	**	PINION	4	
17	985-AX-15599	**	SLEEVE	4	
18	985-AX-19227	*	NUT	4	
19	985-AX-95602	*	BEARING	4	
20	985-AX-15566	*	PIN,DOWEL	4	
21	985-AX-55556	*	GEAR BEVEL	2	
22	985-AX-25578	*	WASHER	2	
23	985-AX-15566	*	PIN,DOWEL	4	
24	985-AX-95724	*	BEARING,ROLLER	2	
25	985-AX-45706	*	NUT	2	
26	985-AX-15444	*	LOCK	2	
27	985-AX-16068	*	BOLT	4	
28	CFW05-12032	*	WASHER	4	
29	985-AX-46565	*	CAGE	1	
30	985-AX-95513	*	BEARING	1	
31	06000-32030	*	BEARING	1	
32	985-AX-15452	*	LOCK NUT	1	

FIG. 70 DIFFERENTIAL ASSY.

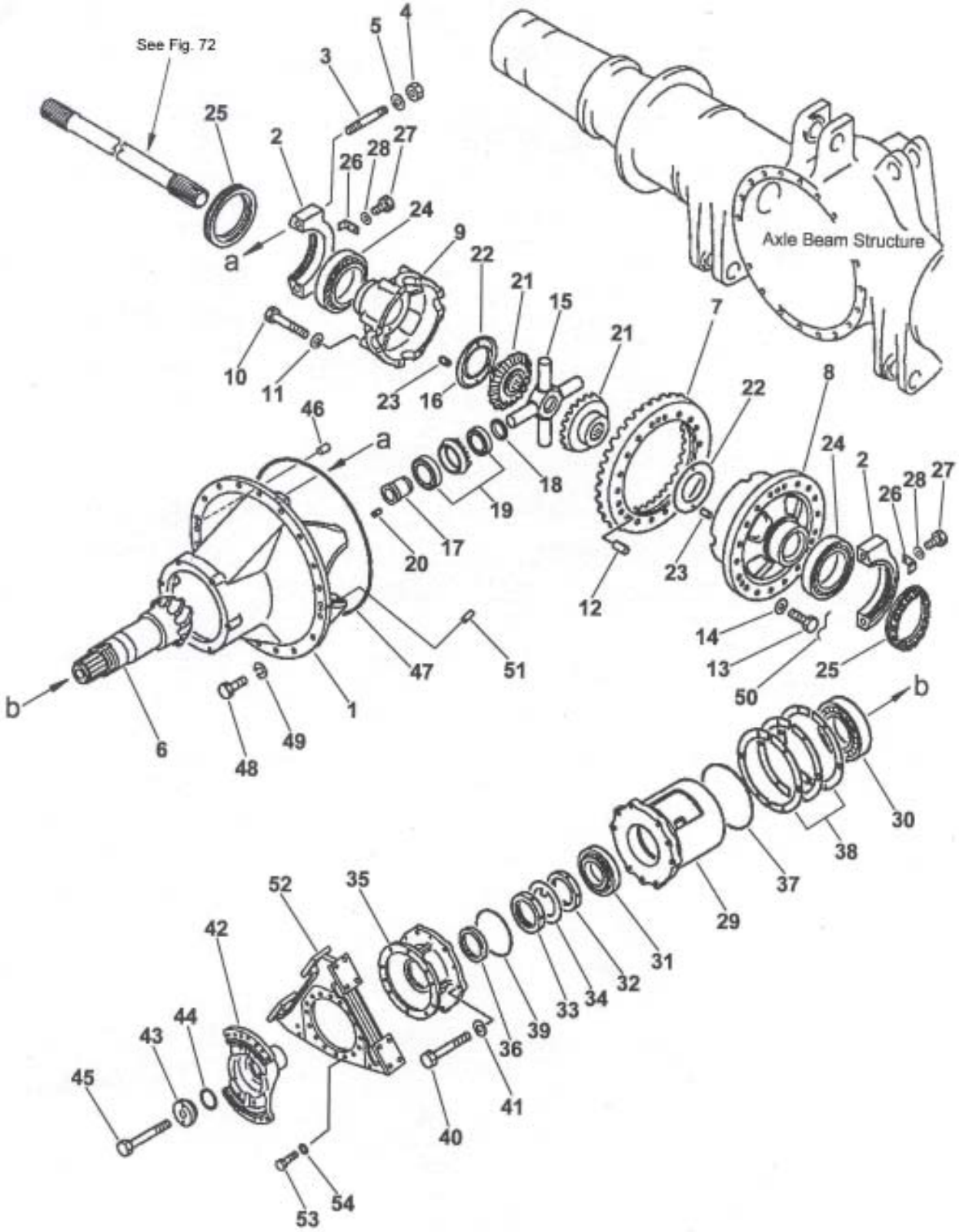

SLNO	PART NUMBER	DESCRIPTION	QTY	REMARKS
33	985-AX-16619	* LOCK NUT	1	
34	985-AX-16627	* LOCK PLATE (KIT)	1	
35	985-AX-46581	* CAGE	1	
36	07012-00150	* OIL SEAL (KIT)	1	
37	CHS01-05320	** O-RING (KIT)	1	
38	985-AXB-9077	** SHIM ASSY (KIT)	1	
38	985-AX-16643	** SHIM (t=1.0 mm)	4	
38	985-AX-16651	* SHIM (t=0.3 mm)	8	
39	CHS01-15240	* O-RING (KIT)	1	
40	CFB01-22090	* BOLT	14	
41	CFW05-20060	* WASHER	14	
42	953-AX-52019	* COUPLING	1	
43	985-AX-16602	* HOLDER	1	
44	CHS01-05110	* O-RING (KIT)	1	
45	985-AX-15614	* BOLT	1	
46	CFP04-01842	* PIN, DOWEL	1	
47	985-AX-65487	* O-RING (KIT)	1	
48	CFB01-22480	* BOLT	20	
49	CFW01-12472	* WASHER	20	
50	CWW01-02035	* LOCK WIRE	11	
51	CFP04-01638	* PIN, DOWEL	1	
52	953-BP-03026	* BRACKET ASSY	1	
53	CFS01-32055	* BOLT	10	
54	CFW05-20060	* WASHER	10	
	985-AX-00507	DIFFERENTIAL SERVICE KIT		

FIG. 71 REAR BRAKE ASSY.

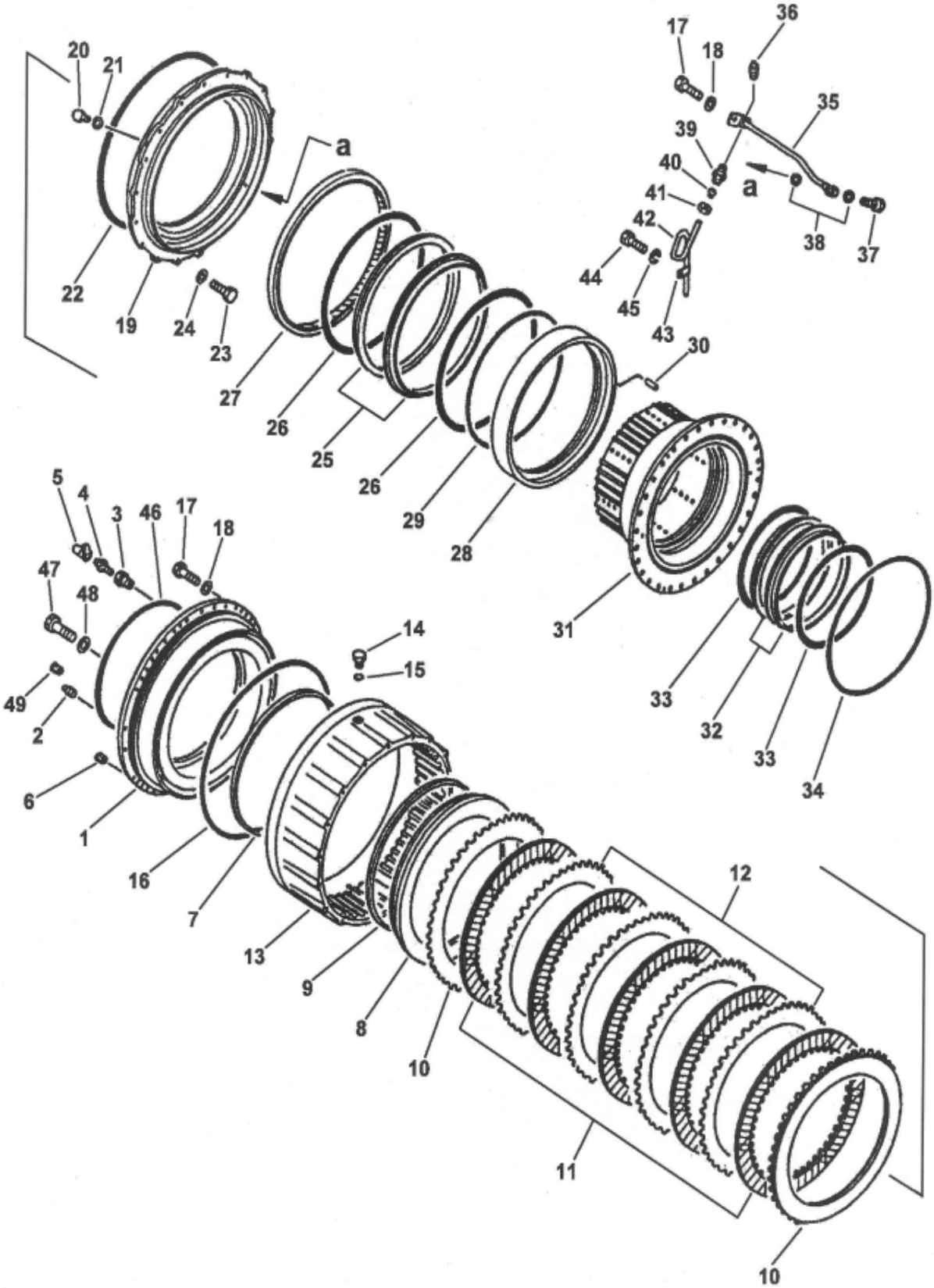

SLNO	PART NUMBER		DESCRIPTION	QTY	REMARKS
	985-BR-01068		REAR BRAKE ASSY	2	
01	985-BR-42058	*	CYLINDER REAR BRAKE	1	
02	CPL01-11113	*	PLUG	1	
03	985-BR-15251	*	PLUG	1	
04	985-BR-15105	*	BLEEDER	1	
05	375-AX-61728	*	CAP	1	
06	CPL09-11822	*	PLUG (KIT)	2	
07	985-BR-65237	*	SEAL (KM)	1	
08	985-BR-45205	*	PISTON REAR BRAKE	1	
09	985-BR-65164	*	SEAL (KIT)	1	
10	985-BR-95223	*	DAMPER	2	
11	985-BR-95248	*	DISC BRAKE	12	
12	985-BR-15219	*	PLATE,FRICTION	11	
13	953-BR-42066	*	GEAR OUTER	1	
14	985-BR-15121	*	PLUG	2	
15	07000-11823	*	O-RING (KIT)	2	
16	985-BR-65148	*	O-RING (KIT)	2	
17	CFB07-21865	*	BOLT	33	
18	CFW05-18045	*	WASHER	33	
19	953-BR-42074	*	HUB	1	
20	CPL06-11007	*	PLUG	1	
21	CPF06-01012	*	GASKET (KIT)	1	
22	985-BR-65148	*	O-RING (KIT)	1	
23	CFB07-21465	*	BOLT	18	
24	CFW05-14045	*	WASHER	18	
25	985-BR-02526	*	FLOATING SEAL ASSY	1	
25	985-BR-95134	***	RING SEAL	2	
26	985-BR-03522	***	O-RING	1	
26	985-BR-65026	*	O-RING	2	
27	985-BR-95159		SEAL, OIL	1	
28	985-BR-45181	*	RETAINER	1	
29	985-BR-65091	*	O-RING (KIT)	1	
30	CFP04-01024	*	PIN,DOWEL	2	
31	953-BR-42082	*	GEAR,INNER	1	
32	985-BR-02534	*	FLOATING SEAL ASSY	1	
32	985-BR-03539	*	SEAL REING ASSY	1	
32	(*985-BR-45035)	**	RING SEAL	2	

FIG. 71 REAR BRAKE ASSY.

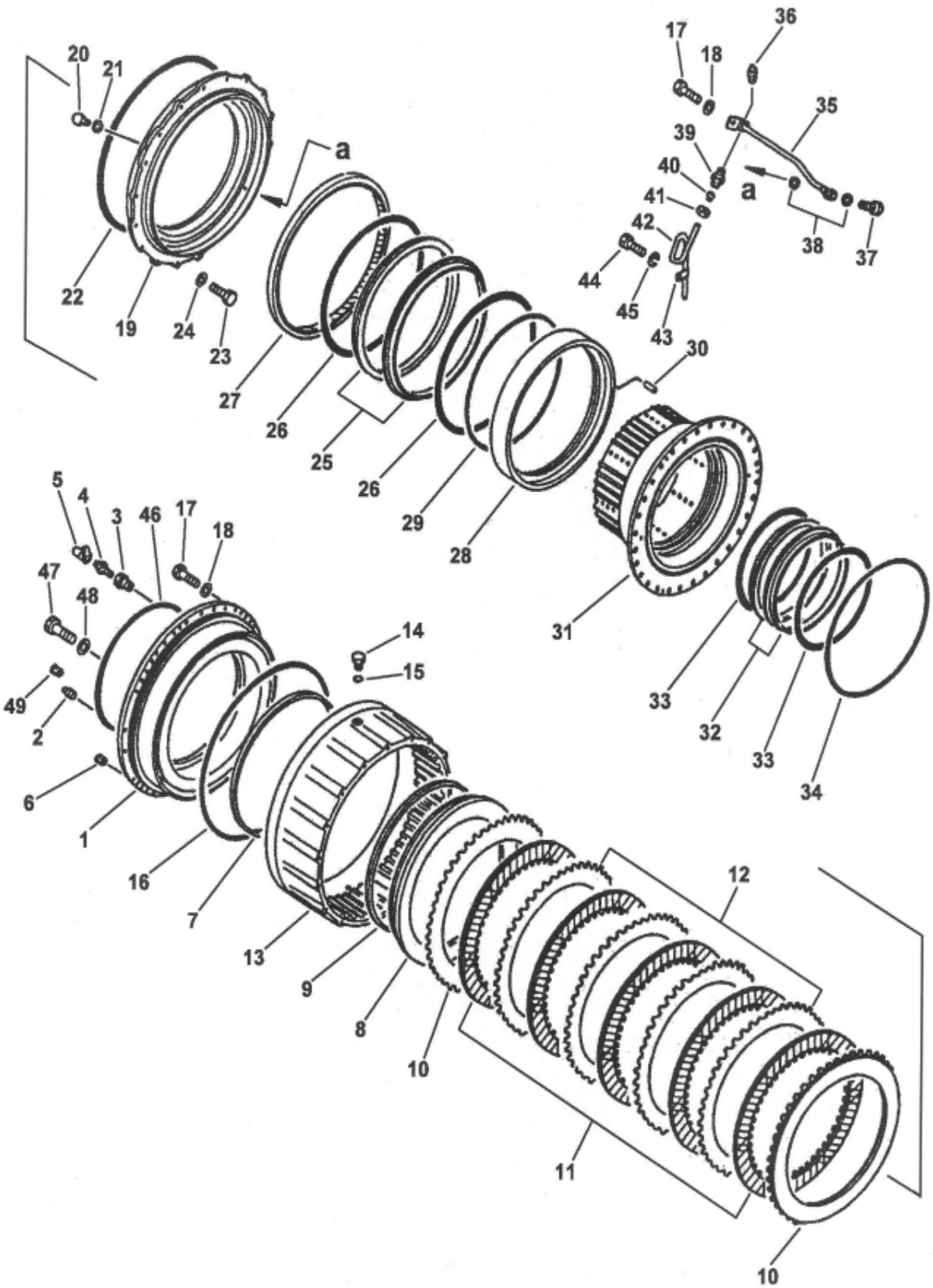

SLNO	PART NUMBER		DESCRIPTION	QTY	REMARKS
33	985-BR-03547	***	O-RING	1	
33	(*985-BR-65018)		O-RING	2	
34	07000-15500	**	O-RING ASSY	1	
35	985-BR-02518	*	TUBE DRAIN	1	
36	CPL01-10810	*	PLUG, PIPE	1	
37	CPF12-10610	*	JOINT	1	
38	CPF06-01012	*	SEAL WASHER	2	
39	CCA05-00410	*	CONNECTOR	1	
40	CPF40-00411	*	SLEEVE	1	
41	CFN45-00410	*	NUT,SLEEVE	1	
42	CHT01-00408	*	TUBE	1	
43	CCC13-00608	*	CLIP	1	
44	CFS01-30816	*	HEX. SCREW	1	
45	CFW01-10825	*	WASHER,SPRING	1	
46	07000-15485	*	O-RING	1	
47	CFB01-22465	*	BOLT	28	
48	CFW05-20060	*	WASHER	28	
49	CPL09-12430	*	PLUG	2	
	985-ZZ-14888		HOSE KIT		

FIG. 72 FINAL DRIVE ASSY.

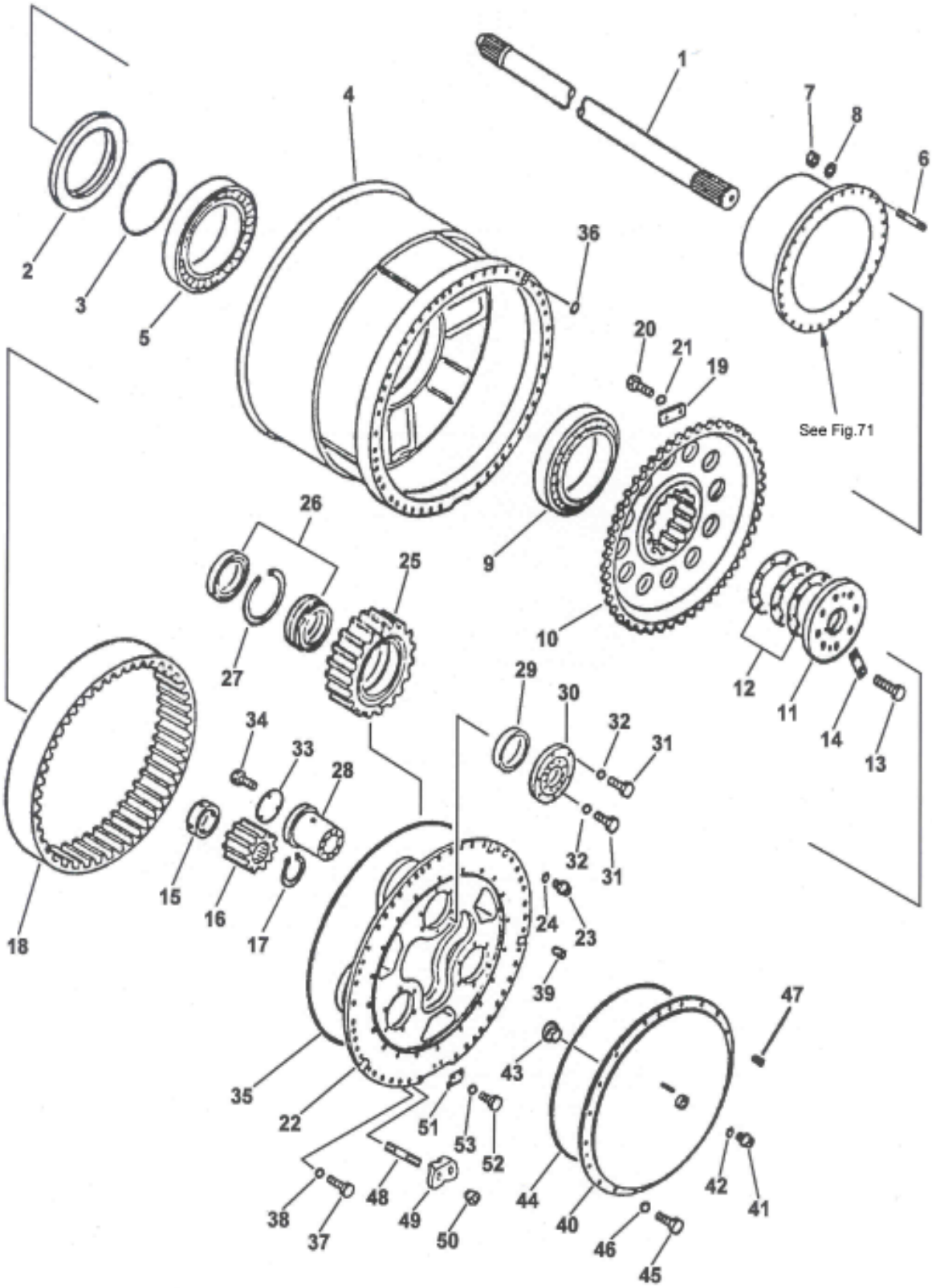

SLNO	PART NUMBER		DESCRIPTION	QTY	REMARKS
	953-AX-02017		FINAL DRIVE ASSY	2	
01	953-AX-12029	*	AXLE SHAFT	1	
02	985-AX-45358	*	RETAINER	1	
03	07000-15320	*	O-RING (KIT)	1	
04	953-AX-03013	*	WHEEL HUB	1	
05	985-AX-95424	*	BEARING ROLLER,INNER	1	
06	CFT05-32050	*	STUD	30	
07	CFN01-22018	*	NUT	30	
08	CFW05-20060	*	WASHER	30	
09	985-AX-95432	*	BEARING ROLLER OUTER	1	
10	985-AX-45017	*	HUB,INNER	1	
11	985-AX-15363	*	RETAINER	1	
12	985-AX-03618	*	SHIM ASSY KIT	1	
12	(*985-AX-15388)	*	SHIM 0.2mm	3	
12	(*985-AX-15396)	*	SHIM 0.3mm	3	
12	(*985-AX-15403)	*	SHIM 1.0mm	2	
13	CFB01-22480	*	BOLT	8	
14	985-AX-15371	*	LOCK (KIT)	4	
15	985-AX-25415	*	SPACER	1	
16	985-AX-55037	*	GEAR,SUN	1	
17	985-AX-15144	*	RING SNAP (KIT)	1	
18	985-AX-55183	*	GEAR,RING	1	
19	985-AX-15152	*	HOLDER	8	
20	CFS01-31225	*	SCREW	16	
21	CFW05-12032	*	WASHER	16	
22	985-AX-45041	*	CARRIER	1	
23	CPL03-12412	*	PLUG	1	
24	07002-12434	*	O-RING (KIT)	1	
25	985-AX-55175	*	GEAR	3	
26	985-AX-95319	*	BEARING ROLLER	3	
27	CFL04-10220	*	RING SNAP	3	
28	985-AX-55167	*	SHAFT	3	
29	985-AX-55207	*	SPACER	3	
30	985-AX-15193	*	RETAINER	3	
31	CFB01-21250	*	BOLT	45	
32	CFW05-12032	*	WASHER	45	

FIG. 72 FINAL DRIVE ASSY.

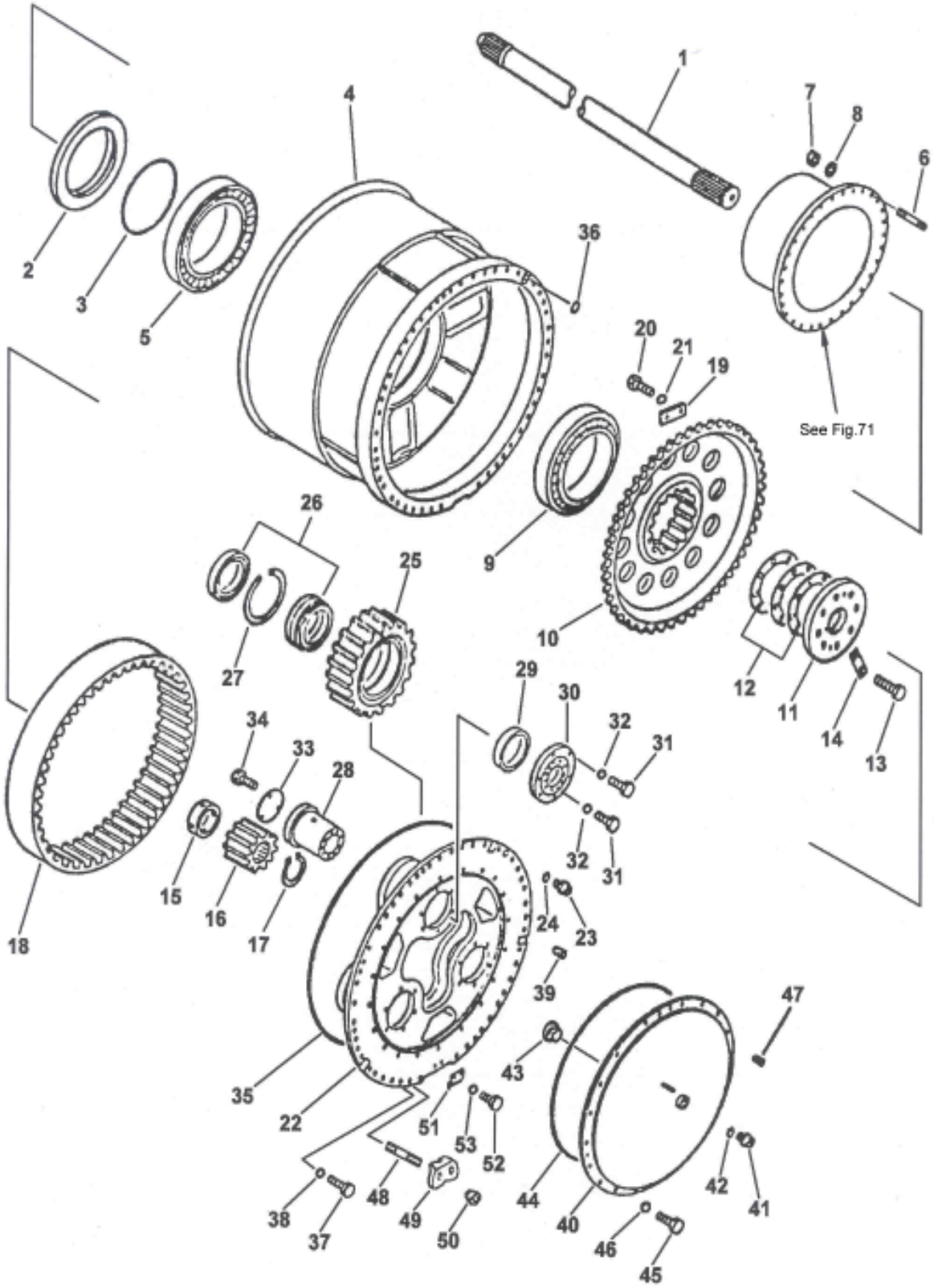

SLNO	PART NUMBER	DESCRIPTION	QTY	REMARKS
33	985-AX-15347	* PLATE	3	
34	CFS01-31220	* SCREW	9	
35	985-AX-65324	* O-RING (KIT)	1	
36	07000-13030	* O-RING (KIT)	1	
37	CFS01-32460	* HEX. SCREW	20	
38	CFW05-24060	* WASHER	20	
39	CPL09-12430	* PLUG (KIT)	3	
40	985-AX-03529	* COVER	1	
41	CPL09-01215	* PLUG	3	
42	07002-13634	* O-RING	1	
43	985-AX-55272	* BUTTON	1	
44	985-AX-65332	* O-RING (KIT)	1	
45	CFB01-21240	* BOLT	20	
46	CFW05-12032	* WASHER	20	
47	CPL09-11215	* PLUG	3	
48	985-AX-15299	* STUD	26	
49	985-AX-55289	* CLAMP	26	
50	985-AX-15306	* NUT	26	
51	985-AX-15055	* PLATE	1	
52	CFS01-31220	* HEX. SCREW	2	
53	CFW05-12032	* WASHER	2	
	985-AX-00515	SERVICE KIT		

FIG. 73 REAR AXLE SUPPORT

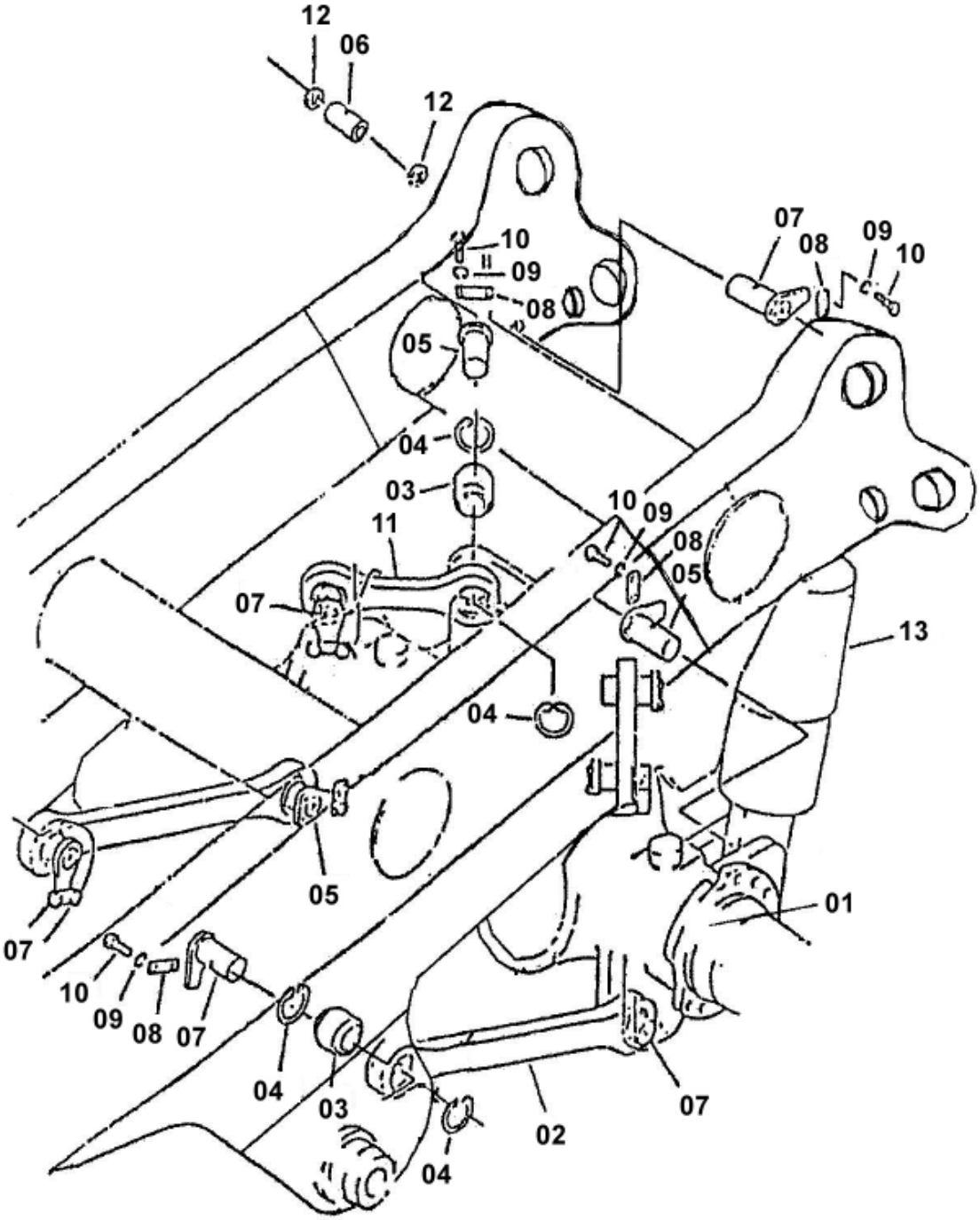

SLNO	PART NUMBER	DESCRIPTION	QTY	REMARKS
01	953-AX-01004	REAR AXLE ASSY	1	
02	953-AX-11227	ROD	2	
03	953-PI-02003	BEARING	8	
04	04071-00160	CIRCLIP	16	
05	953-PI-01031	PIN	6	
06	568-46-11472	BUSH	2	
07	953-PI-01048	PIN	6	
08	985-BD-11033	PLATE	12	
09	CFW01-21442	WASHER, SPRING	24	
10	CFS01-21430	HEX. SCREW	24	
11	953-AX-11219	RADIUS ROD	2	
12	07145-00090	SEAL DUST	4	
13	953-SU-01004	REAR SUSPENSION ASSY	2	

FIG. 74 PARKING BRAKE MOUNTING

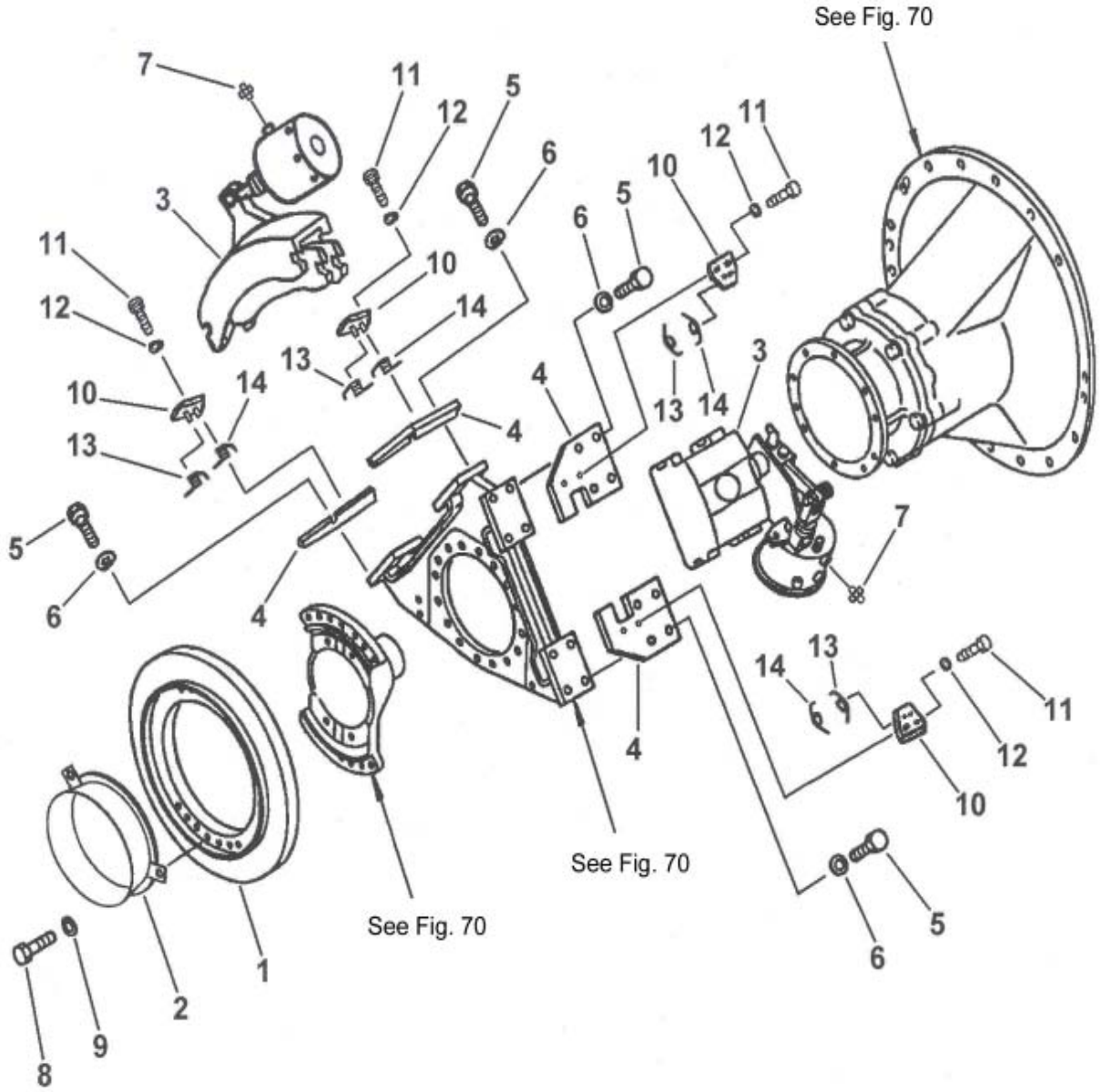

PARKING BRAKE MOUNTING

FIG NO. 74

SLNO	PART NUMBER	DESCRIPTION	QTY	REMARKS
	953-BP-02054	PARKING BRAKE ASSY	1	
01	985-BP-91492	DISC	1	
02	985-BP-02034	COVER	1	
03	985-BP-02042	BRAKE SUB ASSY	2	
04	985-BP-11593	PLATE	4	
05	CFS01-32455	BOLT	16	
06	CFW05-24060	WASHER	16	
07	985-BP-11536	NIPPLE	2	
08	CFS01-32055	BOLT	14	
09	CFW05-20060	WASHER	14	
10	985-ZZ-99671	BRACKET	4	
11	CFB01-21255	BOLT	8	
12	CFW01-12032	WASHER, SPRING	8	
13	985-ZZ-99711	SPRING, TORSION	4	
14	985-ZZ-99728	SPRING, TORSION	4	

FIG. 75 PARKING BRAKE

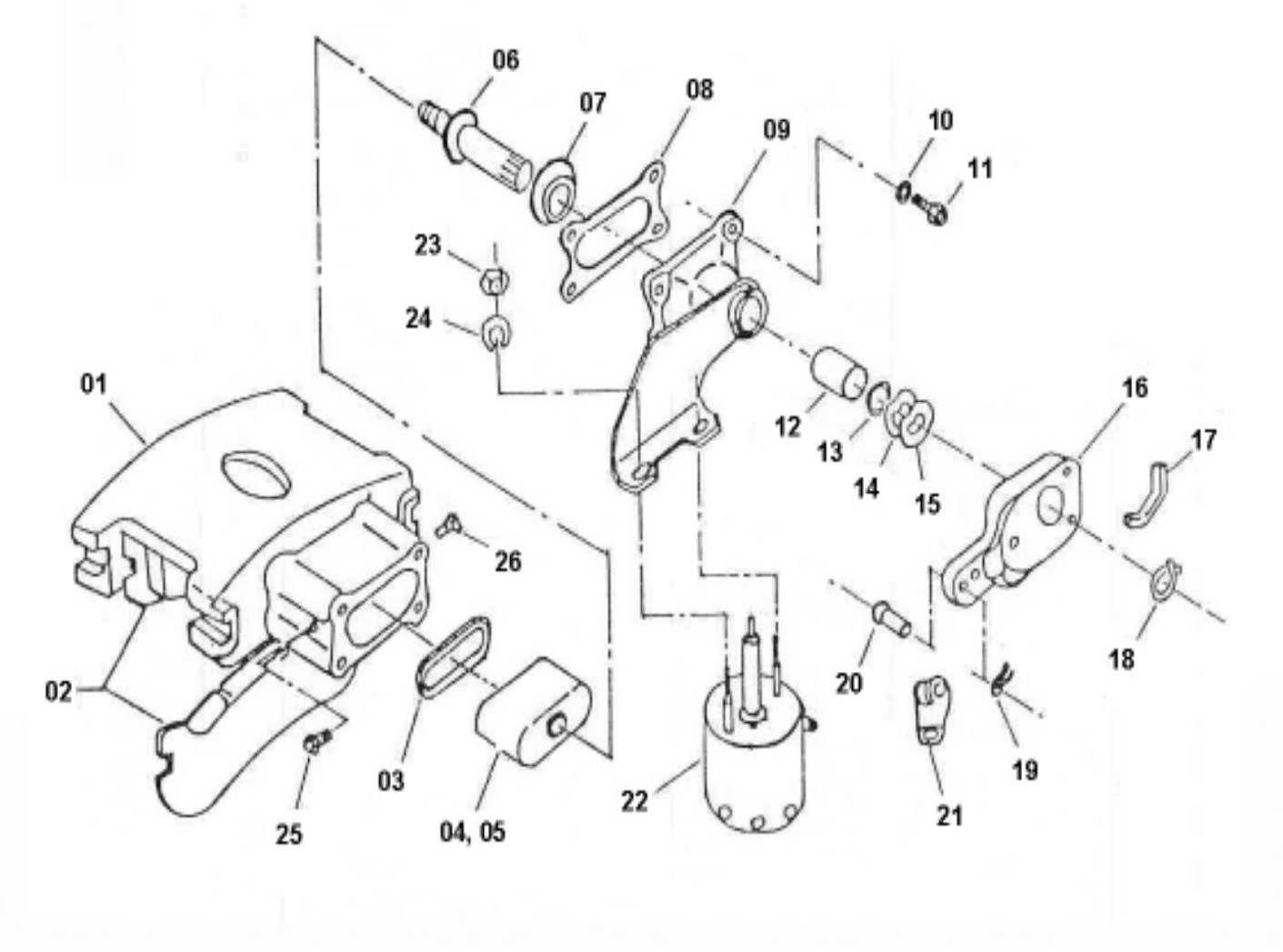

SLNO	PART NUMBER		DESCRIPTION	QTY	REMARKS
	985-BP-02042		PARKING BRAKE SUB ASSY	1	
01	985-BP-13018	*	CALIPER	1	
02	985-BP-13026	*	CARRIER/LINING SET	1	
03	985-BP-13034	*	SEAL PISTON (KIT)	1	
04	985-BP-13042	*	PISTON ASSY	1	
05	985-BP-13059	**	INSULATOR,PISTON (KIT)	1	
06	985-BP-13067	*	SHAFT,POWER SCREW	1	
07	985-BP-13075	*	BEARING THRUST (KIT)	1	
08	985-BP-73089	*	GASKET ASSY (KIT)	1	
09	985-BP-43081	*	CAP ASSY	1	
10	985-BP-13107	*	WASHER FLAT (KIT)	4	
11	985-BP-13115	*	BOLT HEX.HOOD (KIT)	4	
12	985-BP-13123	*	BEARING JOURNAL (KIT)	1	
13	985-BP-13131	*	WASHER (KIT)	1	
14	985-BP-73145	*	PACKING (KIT)	1	
15	985-BP-13156	*	WASHER,WAVE SPRING (KIT)	1	
16	985-BP-13164	*	SLACK ADJUSTER ASSY	1	
17	985-BP-13172	*	INSTLN.KIT SLACK ADJUSTER	1	
18	985-BP-13189	*	RING RETAINER (KIT)	1	
19	985-BP-13197	*	PIN,COTTER	1	
20	985-BP-13204	*	PIN YOKE	1	
21	985-BP-13212	*	YOKE ASSY	1	
22	985-BP-13229	*	ACTUATOR	2	
23	985-BP-13237	*	NUT	2	
24	985-BP-13245	*	WASHER,LOCK	2	
25	985-BP-13253	*	PLUG	1	
26	985-BP-13261	*	FITTING PRESSURE RELIEF	1	
	985-SK-01047		SERVICE KIT		
	985-SK-01051		SEAL KIT (FOR SL.NO. 22)		

FIG. 76 FRONT WHEEL

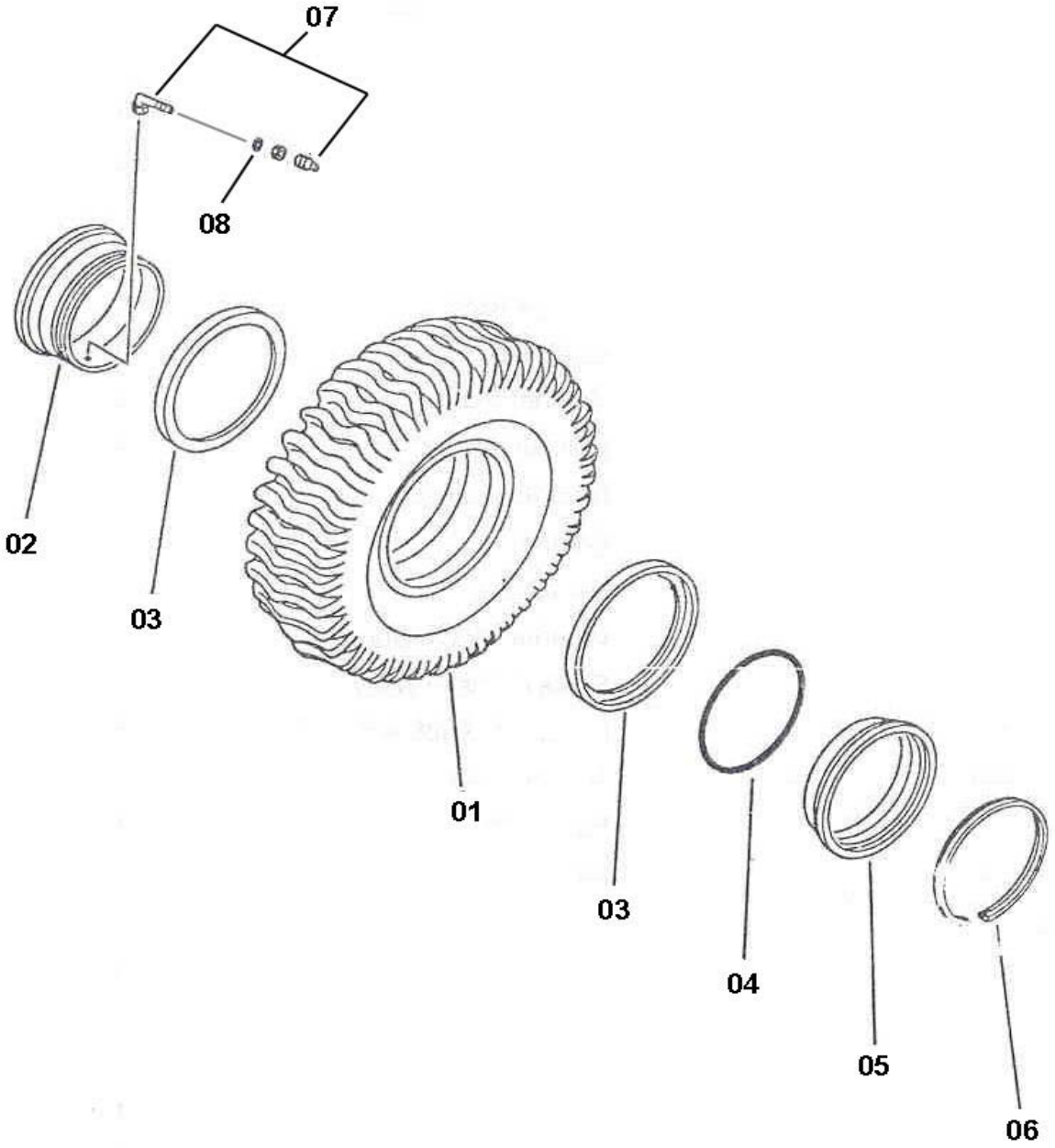

SLNO	PART NUMBER	DESCRIPTION	QTY	REMARKS
	953-WT-01231	FRONT WHEEL ASSY	1	
01	953-WT-02005	RADIAL TIRE 27.00xR49	2	
	953-WT-02005	BIAS TIRE 27.00x49	2	
02	953-WT-02013	RIM ASSY	1	
03	561-81-13330	RING SIDE	2	
04	953-WT-11045	O-RING	1	
05	561-30-11520	BAND, BEAD SEAT	1	
06	561-30-11540	RING, LOCK	1	
07	985-WT-03047	VALVE ASSY	1	
08	CPW02-11225	WASHER	2	

FIG. 77 REAR WHEEL

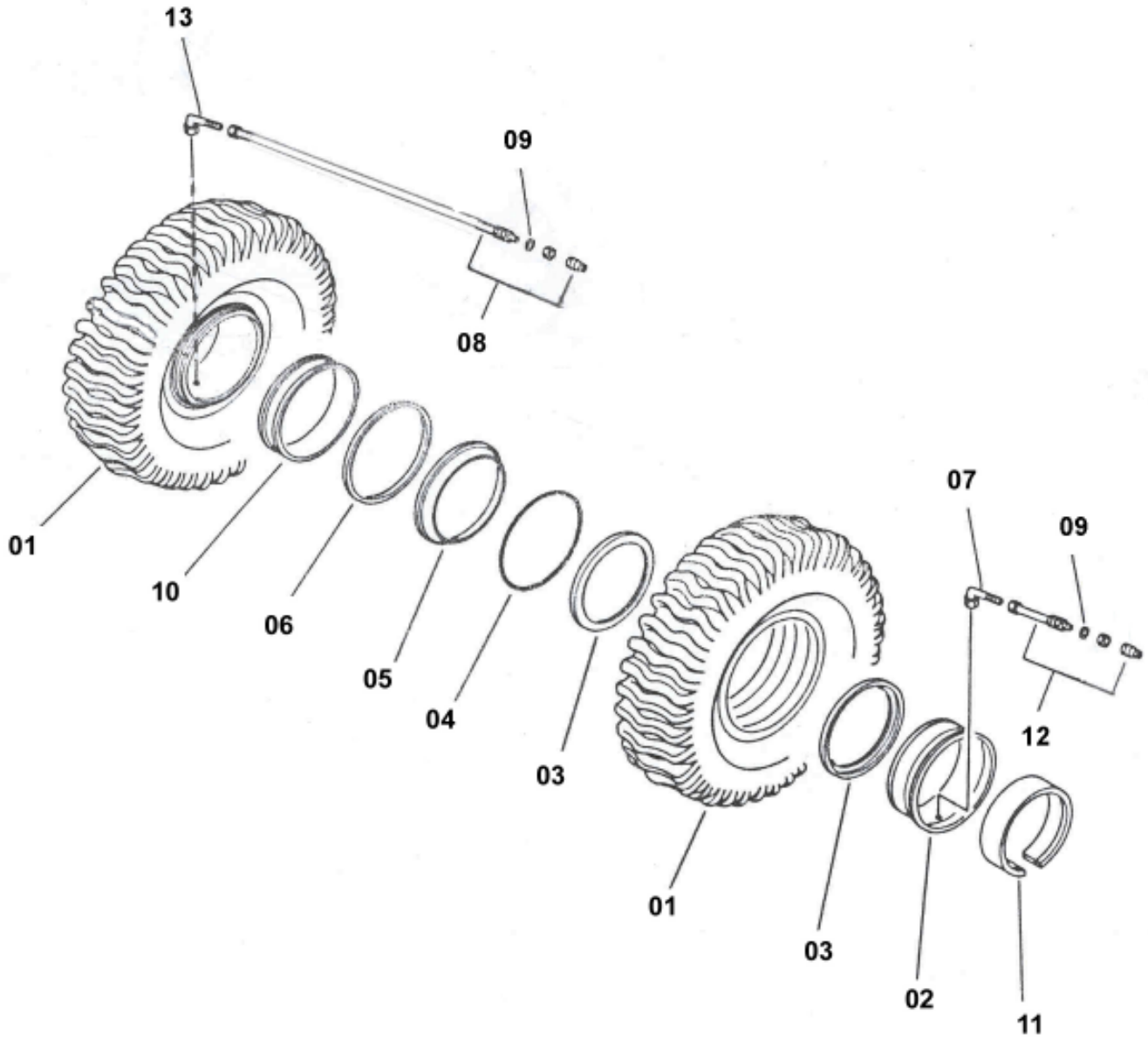

SLNO	PART NUMBER	DESCRIPTION	QTY	REMARKS
	953-WT-01017	REAR WHEEL ASSY	2	
01	953-WT-02005	RADIAL TIRE, 27.00 x R49	2	
	953-WT-02005	BIAS TIRE 27.00x49	2	
02	953-WT-02013	RIM ASSY.	2	
03	561-81-13330	RING,SIDE	2	
04	953-WT-11045	O-RING	1	
05	561-30-11520	BAND,BEAD SEAT	1	
06	561-30-11540	RING,LOCK	1	
07	09280-10020	VALVE ASSY	2	
08	985-WT-03022	EXTENSION HOSE (L=830)	2	
09	CFW02-11225	WASHER	2	
10	953-WT-01009	SPACER	1	
11	953-WT-10008	WEDGE BAND	1	
12	985-WT-03039	EXTENSION HOSE (L=119)	1	
13	985-WT-03047	VALVE (INNER)	1	

FIG. 78 WHEEL STOPPER INST.

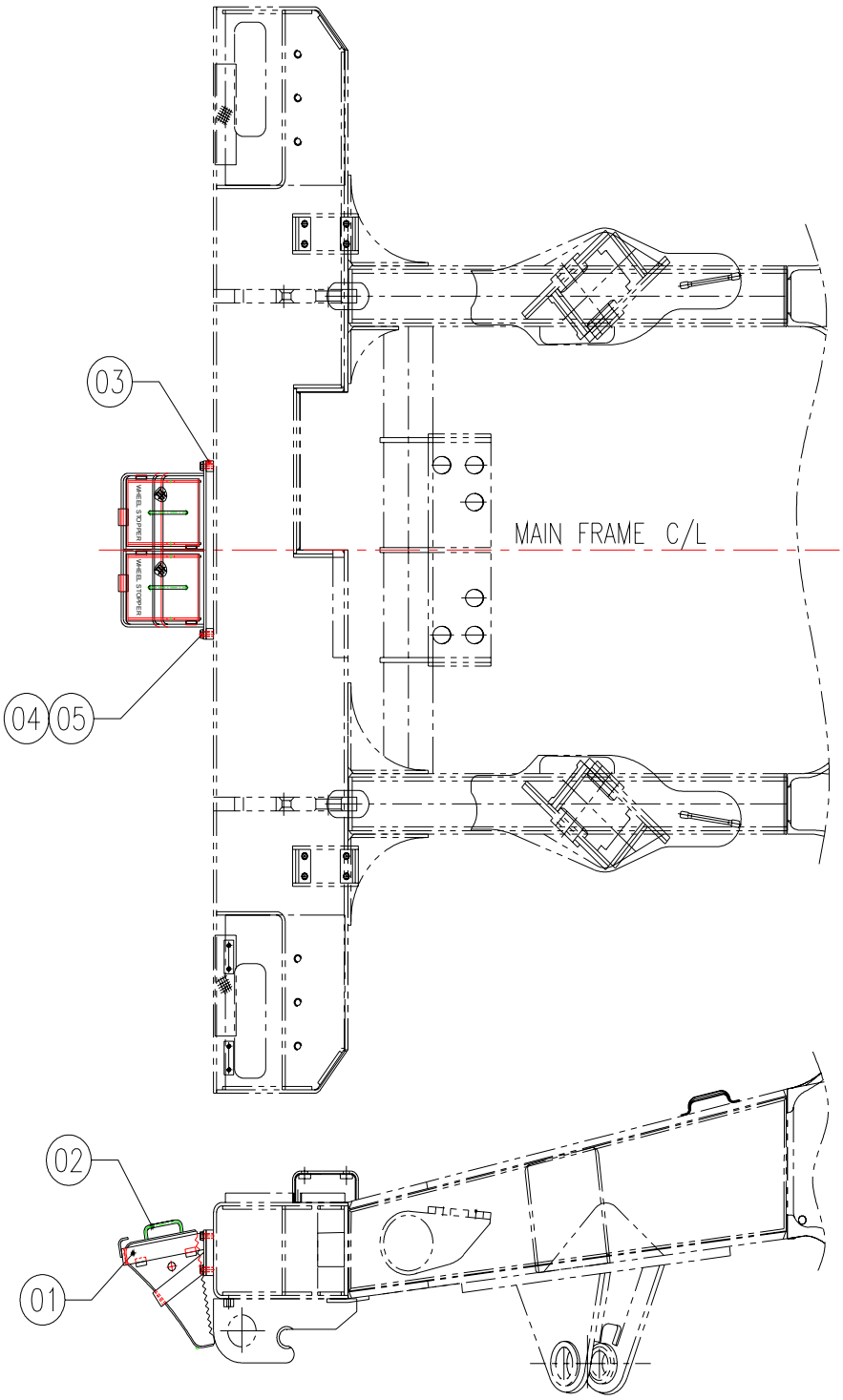

SLNO	PART NUMBER	DESCRIPTION	QTY	REMARKS
	953-WT-01041	WHEEL STOPPER INST		
01	953-WT-02021	BRACKET STR	1	
02	985-WT-02067	WHEEL STOPPER	2	
03	953-WT-11094	TAPPED PAD	2	
04	CFB07-21435	HEX. BOLT	4	
05	CFW01-11442	WASHER, SPRING	4	

IV
AIR SYSTEM

FIG. 85 AIR PIPING (1/2)

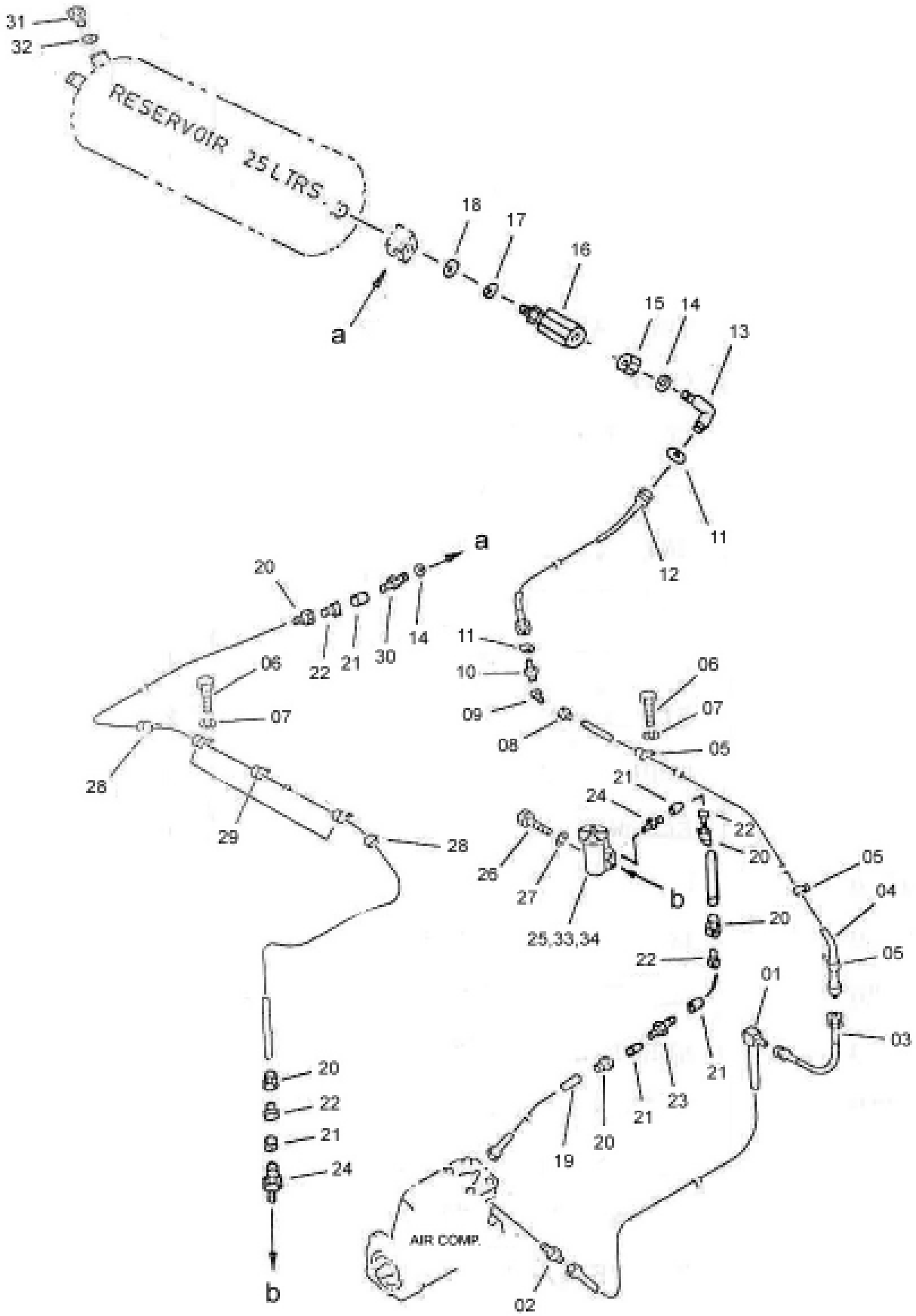

SLNO	PART NUMBER	DESCRIPTION	QTY	REMARKS
01	985-AS-02632	TUBE STR	1	
02	985-AS-14118	NIPPLE	1	
03	985-AS-02119	HOSE ASSY	1	
04	985-AS-02551	TUBE ASSY	1	
05	CCC06-22514	CLIP	3	
06	CFS01-21020	SCREW	6	
07	CFW01-11030	WASHER, SPRING	6	
08	950-AS-13796	UNION NUT 5/8"	1	
09	950-AS-23401	SLEEVE 5/8"	1	
10	985-AS-13788	UNION BODY	1	
11	985-AS-73703	FIBRE WASHER	2	
12	950-AS-02715	HOSE ASSY	1	
13	950-AS-23686	ELBOW	1	
14	950-AS-15613	SPECIAL WASHER M22	2	
15	950-AS-13617	LOCK NUT M22	1	
16	950-AS-02114	NON RETURN VALVE	1	
17	950-AS-15613	SPECIAL WASHER	1	
18	950-AS-65522	SEALING RING	3	
19	985-AS-03037	TUBE STR	1	
20	950-AS-13228	UNION NUT 1/4"	5	
21	950-AS-23231	SLEEVE 1/4"	5	
22	950-AS-24617	INSERT 1/4"	5	
23	985-AS-02535	BRACKET STR.	1	
24	07202-50610	ELBOW	2	
25	935-AS-02057	AIR GOVERNER	1	
26	CFB01-20875	BOLT	2	
27	CFW01-10825	WASHER SPRING	2	
28	TZB01-10004	BAND	2	
29	CCC05-08110	CLIP PVC	3	
30	07214-50610	CONNECTOR	1	
30a	985-AS-04114	SAFETY VALVE	1	

FIG. 86 AIR PIPING (2/2)

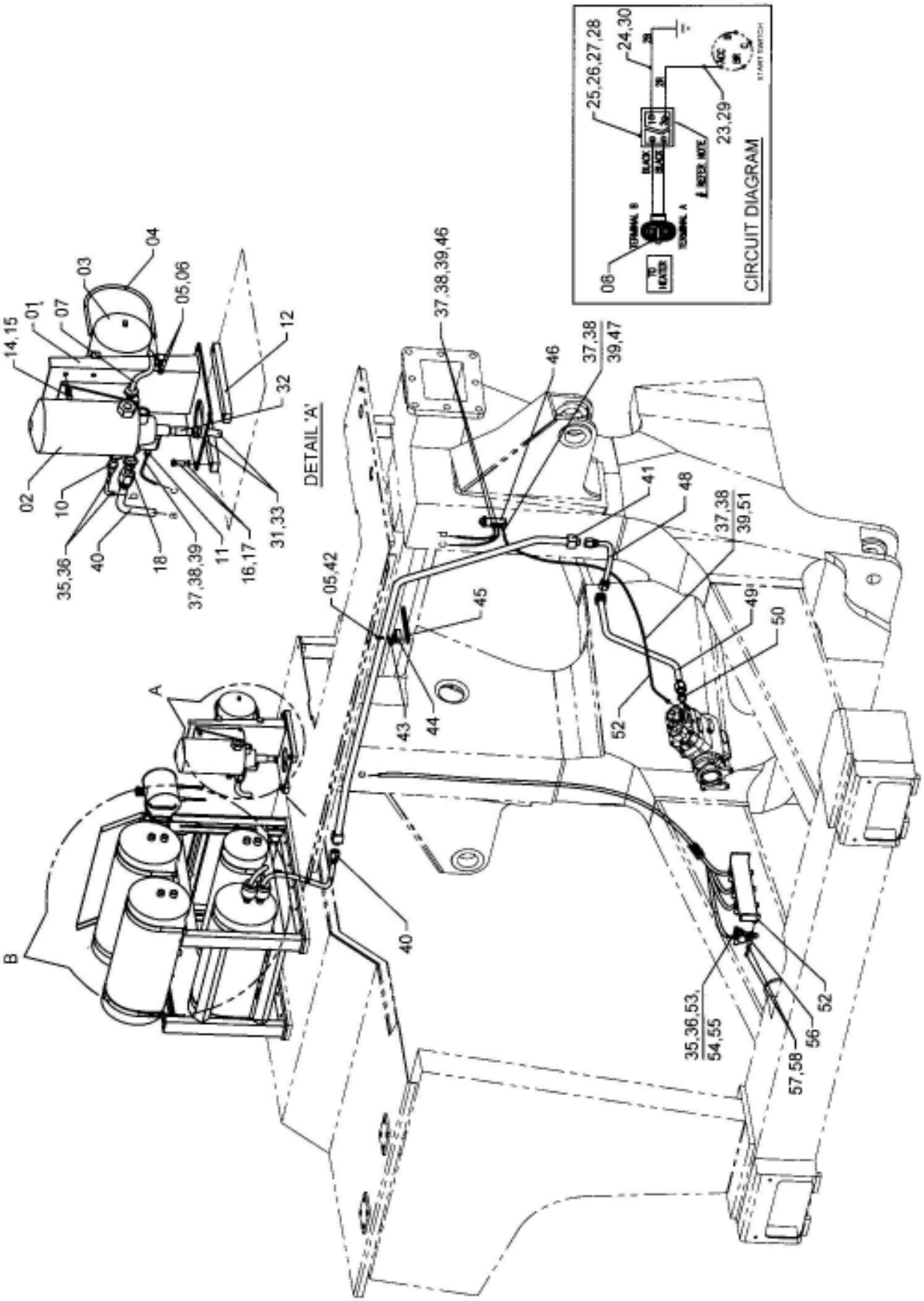

FIG NO. 86

SLNO	PART NUMBER	DESCRIPTION	QTY	REMARKS
01	953-AS-02093	BRACKET STR.	1	
02	953-AS-02174	AIR DRYER (HD2000)	1	
03	953-AS-02117	PURGE TANK	1	
04	953-AS-11027	U-BOLT	2	
05	953-AS-11019	HEX. NUT	4	
06	953-AS-11035	SPLIT WASHER	4	
07	953-AS-02028	HOSE & FITTING KIT	1	
08	953-EG-02732	WIRE HARNESS	1	
09	953-AS-12089	CHANNEL	2	
10	985-AS-12628	CONNECTOR	1	
11	466804000130	CONNECTOR	1	
12	985-AS-12741	PAD	REF.	
13	CPW15-10022	TAPPED PAD	4	
14	CFS01-21025	HEX. SCREW	8	
15	CFW01-11030	SPRING WASHER	11	
16	CFS01-31230	HEX. SCREW	8	
17	CFW01-11236	SPRING WASHER	8	
18	953-AS-11051	CONNECTOR	1	
19	953-ASB-6775	AIR DRYER KIT	1	
20	953-SK-00079	SERVICE KIT	1	
21	CCC05-22110	CLAMP, PVC	3	
22	CFS01-21020	HEX NUT	3	
23	C2501-10522	CABLE (RED)	2Mts	
24	C2501-10500	CABLE (BLACK)	2Mts	
25	08027-10260	CONNECTOR 2F	1	
26	08027-10210	CONNECTOR 2M	1	
27	08027-11000	TERMINAL M	2	
28	08027-12000	TERMINAL F	2	
29	CET01-10205	TERMINAL	1	
30	CET01-10210	TERMINAL	1	
31	935-AS-66628	HOSE	1	
32	DF 3987	NIPPLE	I	
33	CCC01-02057	CLIP	1	
34	CPW03-10022	ROUND PAD	3	
35	950-AS-13796	UNION NUT 5/8"	6	
36	950-AS-23401	SLEEVE 5/8"	6	
37	950-AS-13228	UNION NUT 1/4"	5	

FIG. 86 AIR PIPING (2/2)

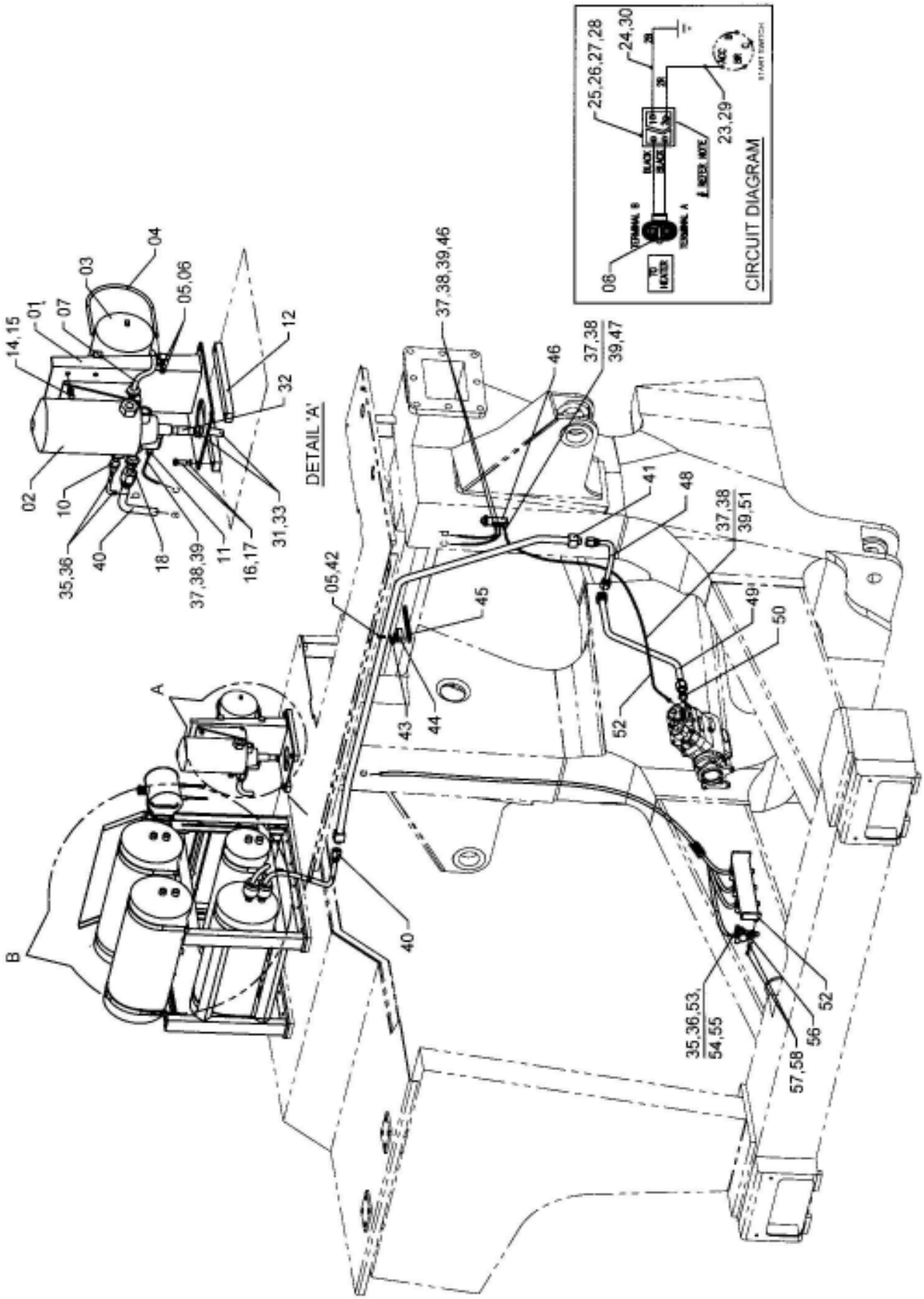

SLNO	PART NUMBER	DESCRIPTION	QTY	REMARKS
38	950-AS-23231	SLEEVE 1/4"	5	
39	950-AS-24617	INSERT 1/4"	5	
40	953-AS-02036	HOSE ASSY	1	
41	953-AS-02069	TUBE STR.	1	
42	CFS01-21016	HEX SCREW	2	
43	CCC06-01814	CLIP	2	
44	CPW33-10022	TAPPED PAD	2	
45		PLATE	2	
46	985-AS-12522	ELBOW	2	
47	985-AS-12766	CONNECTOR	1	
48	953-AS-02028	HOSE ASSY	1	
49	953-AS-02077	TUBE STR.	1	
50	953-AS-16788	ADOPTOR	1	
51	950-AS-14354	PIPE CONNECTOR	1	
52	953-AS-02085	PLATE STR	1	
53	950-AS-13788	UNION BODY	4	
54	950-AS-15601	SPECIAL WASHER M22	4	
55	950-AS-65522	SEALING RING M22	4	
56	950-AS-02522	SHUTOFF COCK	4	
57	CFB01-20870	HEX BOLT M8	8	
58	CFW05-08023	WASHER	8	

FIG. 87 AIR PIPING

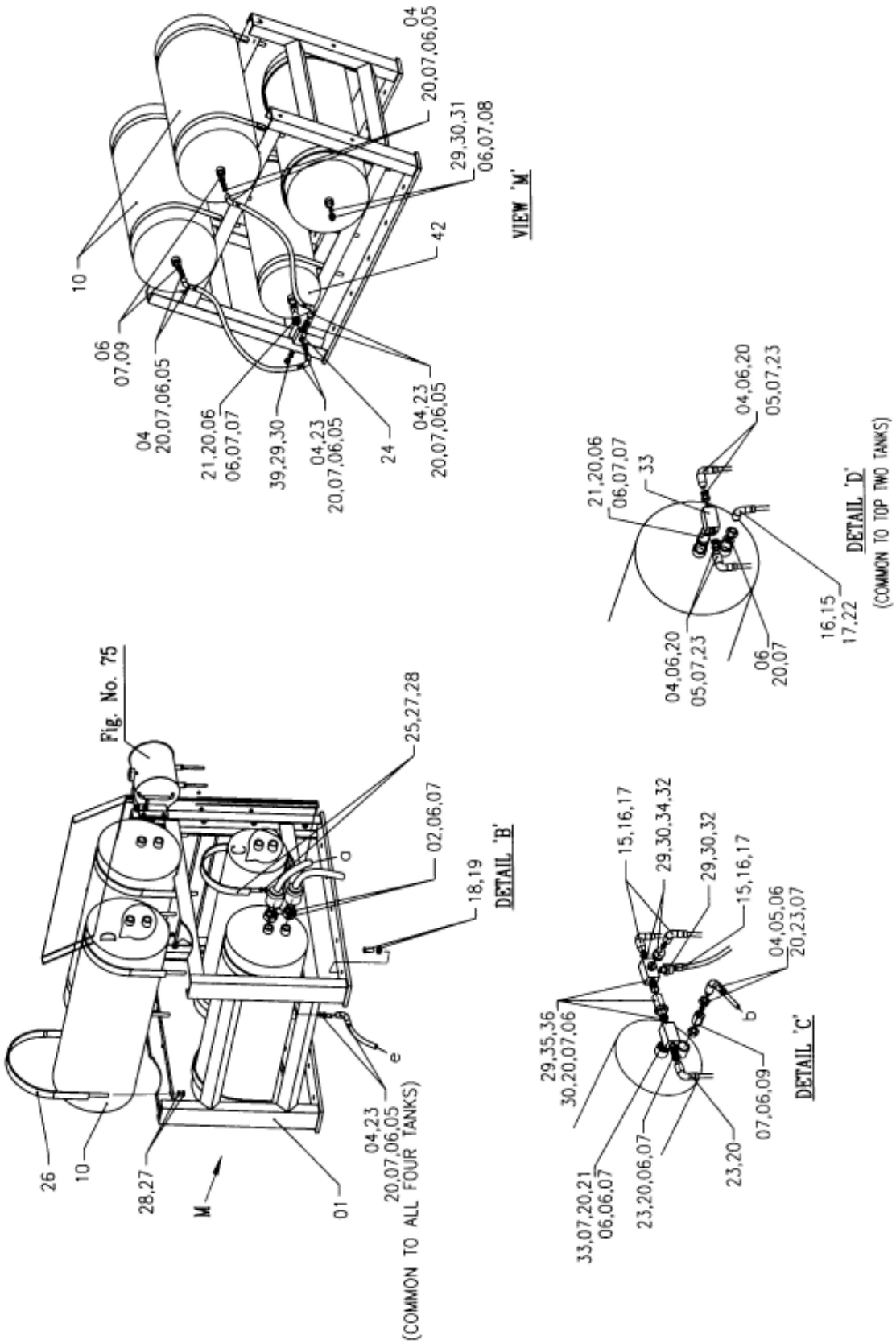

SLNO	PART NUMBER	DESCRIPTION	QTY	REMARKS
01	985-AS-02162	COVER STR	1	
02	985-AS-13998	PLATE	1	
03	985-AS-13949	BLOCK	1	
04	950-AS-23401	SLEEVE	6	
05	950-AS-13796	UNION NUT	5	
06	950-AS-15613	SPRING WASHER M22	16	
07	950-AS-65522	SEALING RING M22	16	
08	985-AS-12839	CONNECTOR	1	
09	950-AS-02114	NON RETURN VALVE	3	
10	950-AS-02463	RESERVOIR 50 Ltr	3	
11	950-AS-13511	LOCK NUT M16x2	3	
12	950-AS-02446	AIR RESERVOIR MTG. STR.	1	
13	950-AS-02488	RESERVOIR 50 Ltr	3	
14	950-AS-13909	PLUG M16x2	1	
15	950-AS-23289	SLEEVE 3/8	5	
16	950-AS-13277	UNION BODY 3/8	5	
17	950-AS-24609	INSERT 3/8	5	
18	CFB01-21295	HEX BOLT M12	10	
19	CFW01-11236	SPRING WASHER M12	10	
20	950-AS-13617	LOCK NUT	6	
21	950-AS-13666	DOUBLE SOCKET	2	
22	950-AS-23694	ELBOW	3	
23	950-AS-23844	ELBOW	3	
24	985-AS-11048	BLOCK	2	
25	935-AS-02387	BAND ASSEMBLY	2	
26	935-AS-02395	BAND ASSEMBLY	6	
27	CFN01-21211	HEX NUT M12	16	
28	CFW05-12032	WASHER	16	
29	950-AS-65603	SEALING RING M16	3	
30	950-AS-15886	SPECIAL WASHER	7	
31	950-AS-02017	SAFETY VALVE	2	
32	950-AS-13269	UNION BODY	1	
33	985-AS-13843	BLOCK	1	
34	950-AS-23507	ELBOW	2	
35	950-AS-13803	DOUBLE SOCKET	2	
36	985-AS-13949	BLOCK	1	

FIG. 88 AIR PIPING(1/2)

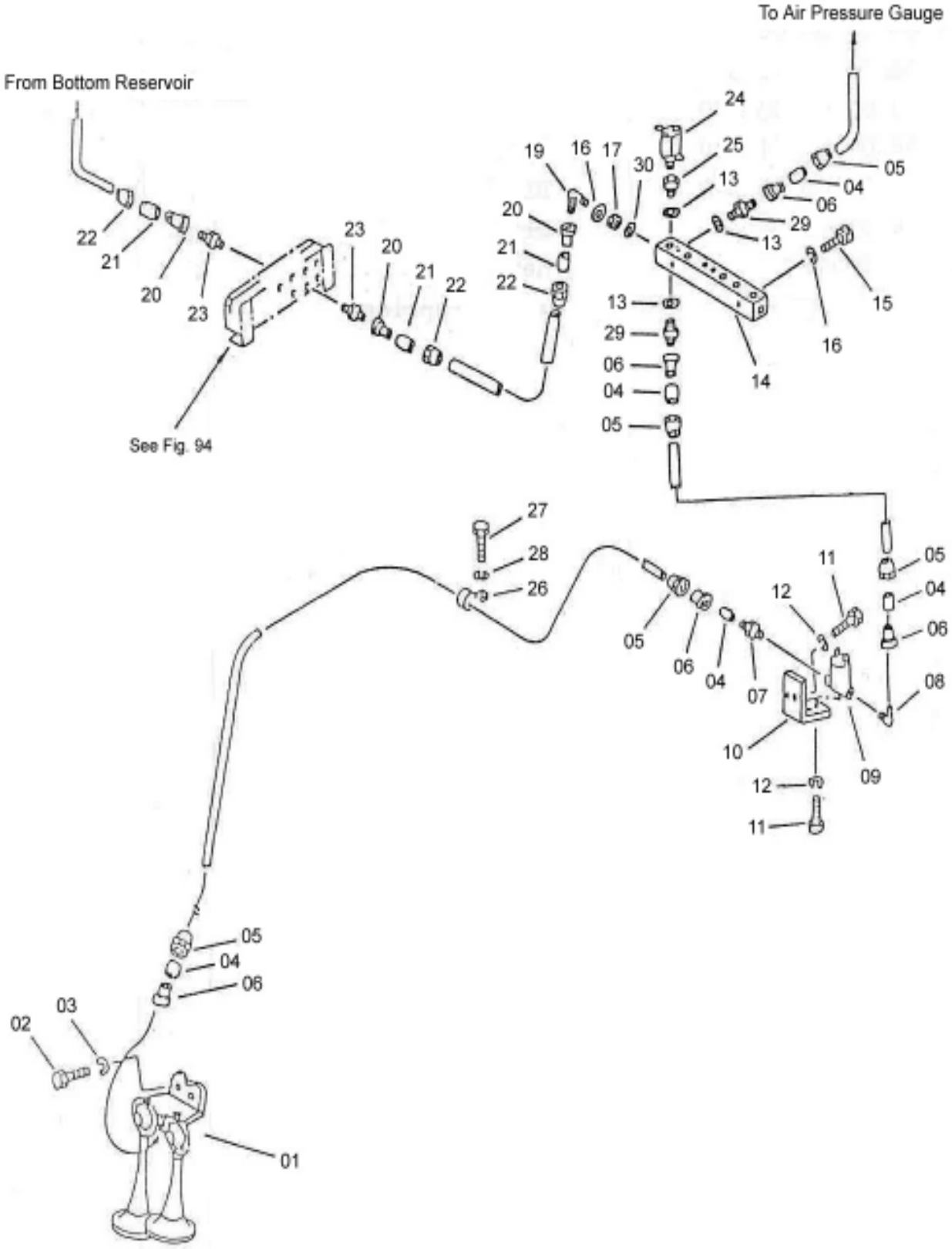

SLNO	PART NUMBER	DESCRIPTION	QTY	REMARKS
01	985-AS-02073	AIR HORN (TWO TONE)	1	
02	CFS01-20616	HEX.SCREW	2	
03	CFW01-10619	WASHER,SPRING	2	
04	950-AS-23231	SLEEVE,1/4"	5	
05	950-AS-13228	UNION NUT 1/4"	5	
06	950-AS-24617	INSERT 1/4'	5	
07	985-AS-11064	CONNECTOR	1	
08	985-AS-11072	ELBOW	1	
09	935-AS-03545	SOLENOID VALVE	1	
10	985-AS-11056	BRACKET	1	
11	CFS01-20820	HEX. SCREW	4	
12	CFW01-10825	WASHER,SPRING	4	
13	950-AS-15586	SPECIAL WASHER M16	3	
14	985-AS-13876	JOINT	1	
15	CFS13-51235	HEX. SCREW	2	
16	CFW01-11236	WASHER,SPRING	2	
17	950-AS-13511	LOCK NUT M16X2.0	1	
18	950-AS-65603	SEALING RING M16	1	
19	950-AS-23507	ELBOW	1	
20	950-AS-24609	INSERT 3/8"	3	
21	950-AS-23289	SLEEVE 3/8"	3	
22	950-AS-13277	UNION NUT 3/8"	3	
23	950-AS-13868	UNION	2	
24	985-AS-02698	STOP LIGHT SWITCH	1	
25	985-AS-13932	ADAPTOR	1	
26	CCC05-14014	CLIP	1	
27	CFS01-21020	HEX. SCREW	2	
28	CFW01-11030	WASHER,SPRING	2	
29	950-AS-13869	UNION BODY	1	
30	950-AS-15586	SPECIAL WASHER	1	

FIG. 89 AIR PIPING (JOINT ASSY. REF.) (2/2)

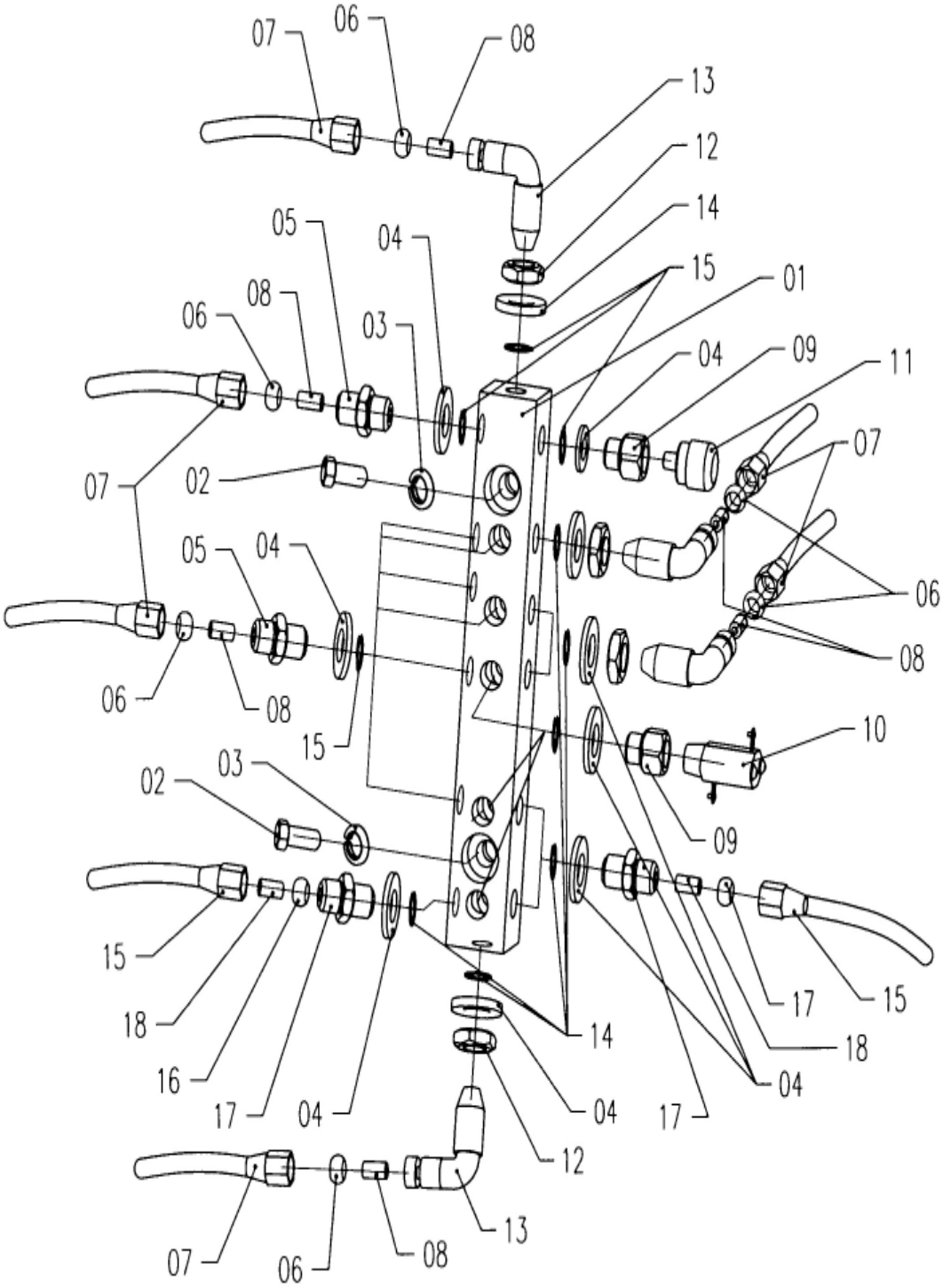

SLNO	PART NUMBER	DESCRIPTION	QTY	REMARKS
01	985-AS-13876	JOINT	1	
02	CFS13-51235	SCREW	2	
03	CFW01-11236	WASHER,SPRING	2	
04	950-AS-15586	WASHER M16	15	
05	950-AS-13269	UNION BODY	9	
06	950-AS-23289	SLEEVE 3/8"	13	
07	950-AS-13277	UNION NUT 3/8"	13	
08	950-AS-24609	INSERT 3/8"	13	
09	985-AS-13932	ADAPTOR	7	
10	985-AS-02698	LOW PRESSURE SWITCH	3	
11	985-AS-02705	STOP LIGHT SWITCH	1	
12	950-AS-13511	LOCK NUT M16X2.0	3	
13	950-AS-15586	SPECIAL WASHER	3	
14	950-AS-13884	ELBOW	3	
15	950-AS-65603	SEALING RING M16	18	
16	950-AS-13228	UNION NUT 1/4"	2	
17	950-AS-23231	SLEEVE 1/4"	2	
18	950-AS-13869	UNION BODY 1/4"	2	
19	950-AS-24617	INSERT 1/4"	2	

FIG. 90 AIR PIPING (JOINT ASSY. REF.) (1/2)

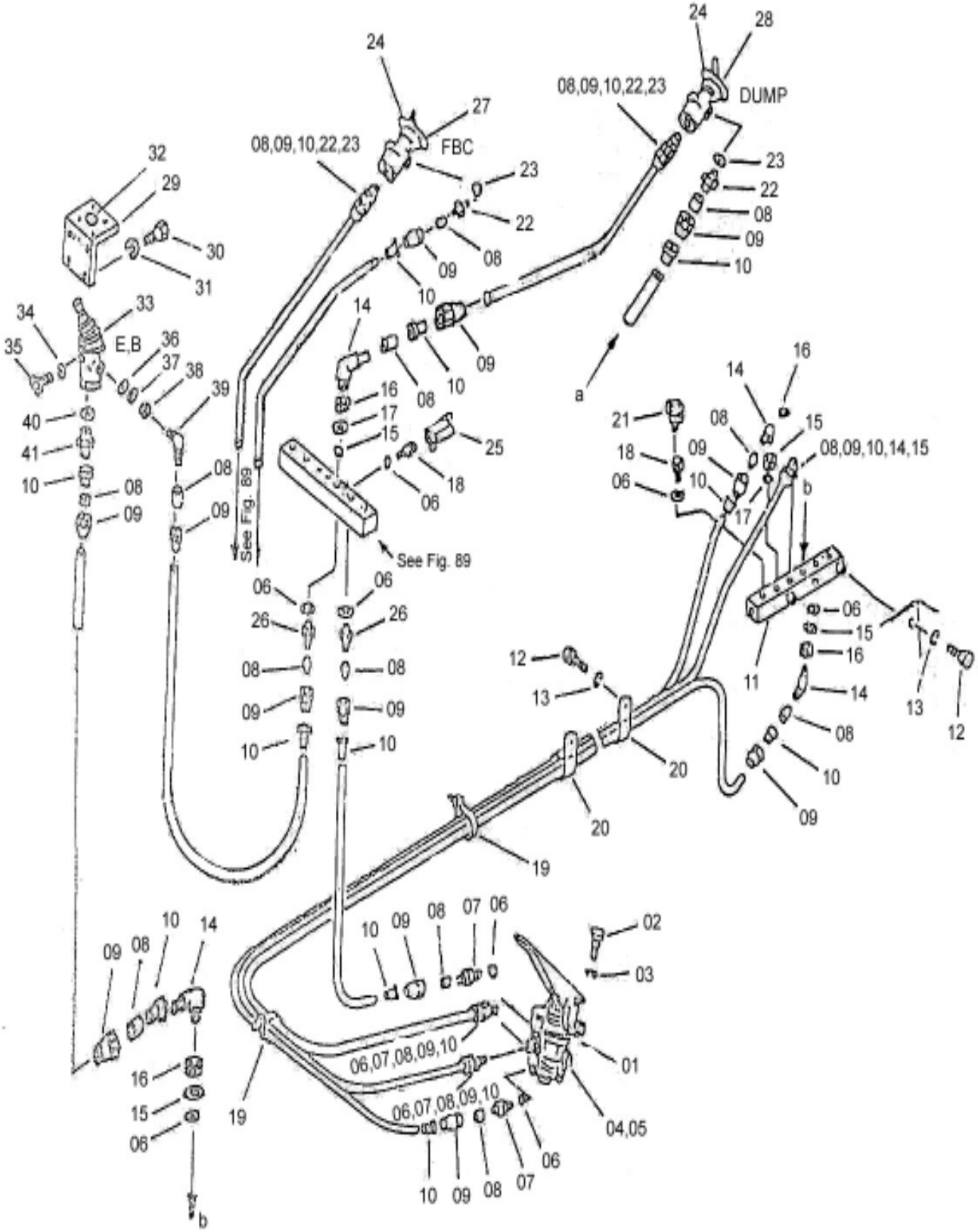

SLNO	PART NUMBER	DESCRIPTION	QTY	REMARKS
01	950-AS-02528	DUAL BRAKE VALVE	1	
02	CFS01-20830	SCREW	3	
03	CFW01-10825	WASHER,SPRING	3	
04	950-AS-15594	WASHER M14	1	
05	950-AS-13374	PLUG M14X1.5	1	
06	950-AS-15586	WASHER M16	9	
07	950-AS-14135	UNION BODY	4	
08	950-AS-23289	SLEEVE 3/8"	20	
09	950-AS-13277	UNION NUT 3/8"	20	
10	950-AS-24609	INSERT 3/8"	15	
11	985-AS-02093	JOINT ASSY”	1	
12	CFS01-21020	SCREW	4	
13	CFW01-11030	WASHER,SPRING	4	
14	985-AS-13884	ELBOW	6	
15	950-AS-15586	SPECIAL WASHER	6	
16	950-AS-13511	LOCK NUT M16X2.0	6	
17	950-AS-65603	SEALING RING M16	15	
18	985-AS-13932	ADAPTOR	2	
19	TZB01-10004	BAND	2	
20	CCC05-28110	CLIP	2	
21	985-AS-02705	STOP LIGHT SWITCH	1	
22	950-AS-13828	UNION BODY	4	
23	950-AS-23231	WASHER M10	4	
24	950-AS-02536	LEVER TYPE CONTROL VALVE	2	
25	985-AS-02698	L.P.I SWITCH	1	
26	950-AS-13269	UNION BODY	2	
27	985-DZ-21335	DECAL (FCB)	1	
28	985-DZ-21343	DECAL (DUMP)	1	
29	985-AS-12117	BRACKET	1	
30	CFS01-20820	SCREW	2	
31	CFW01-10825	WASHER,SPRING	2	
32	985-DZ-21351	DECAL (E.B)	1	
33	950-AS-02188	HAND CONTROL VALVE	1	
34	950-AS-23012	WASHER M12	1	
35	950-AS-13488	PLUG M12	1	
36	950-AS-15613	SPECIAL WASHER	1	

FIG. 90 AIR PIPING (JOINT ASSY. REF.) (1/2)

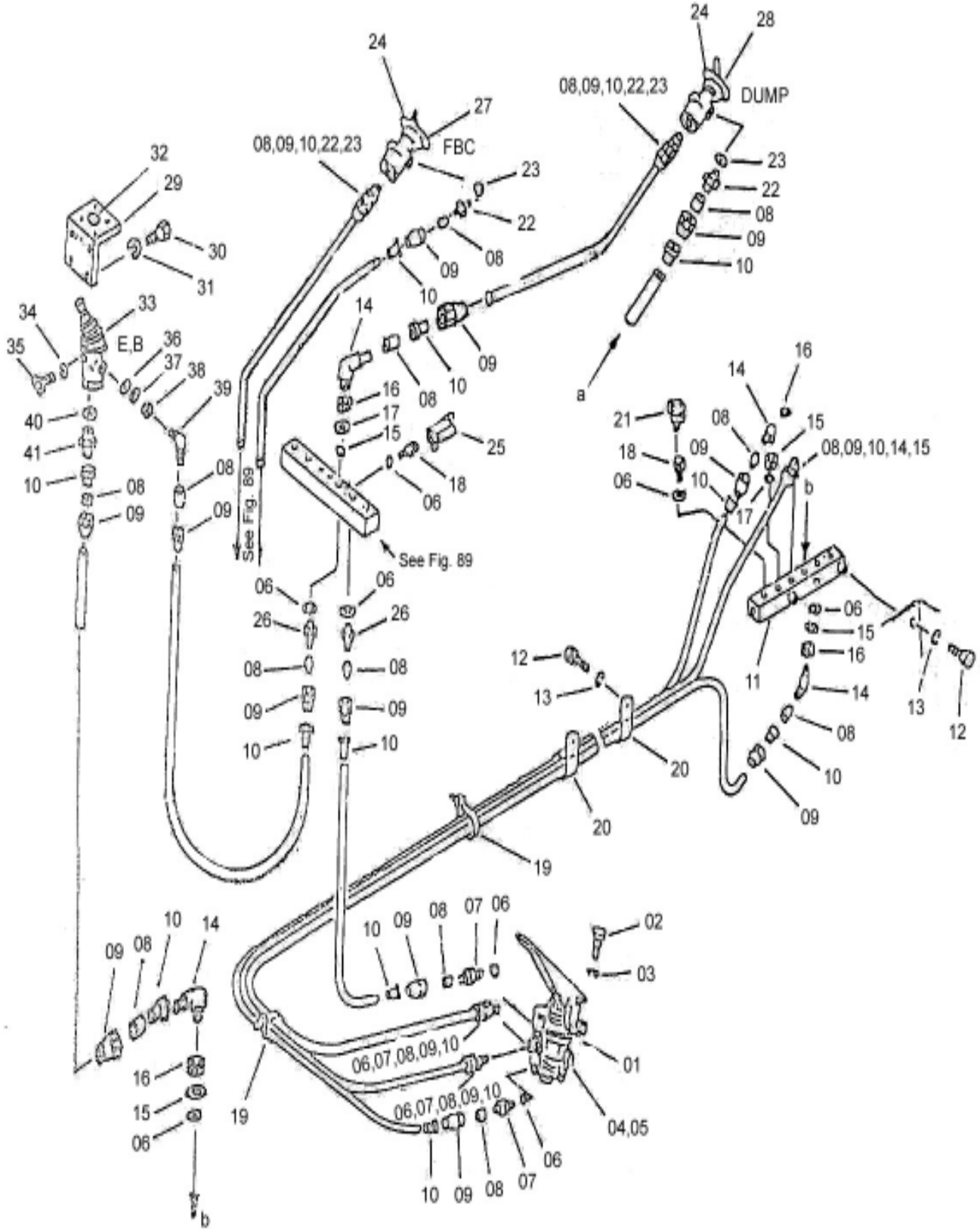

SLNO	PART NUMBER	DESCRIPTION	QTY	REMARKS
37	950-AS-65522	SEALING RING M22	2	
38	950-AS-13617	LOCK NUT M22x1.5	1	
39	950-AS-23694	ELBOW	1	
40	950-AS-15613	WASHER M22	1	
41	950-AS-13633	UNION BODY	1	
42	950-AS-62339	SEALING RING	1	

FIG. 91 AIR PIPING (JOINT ASSY. REF.) (2/2)

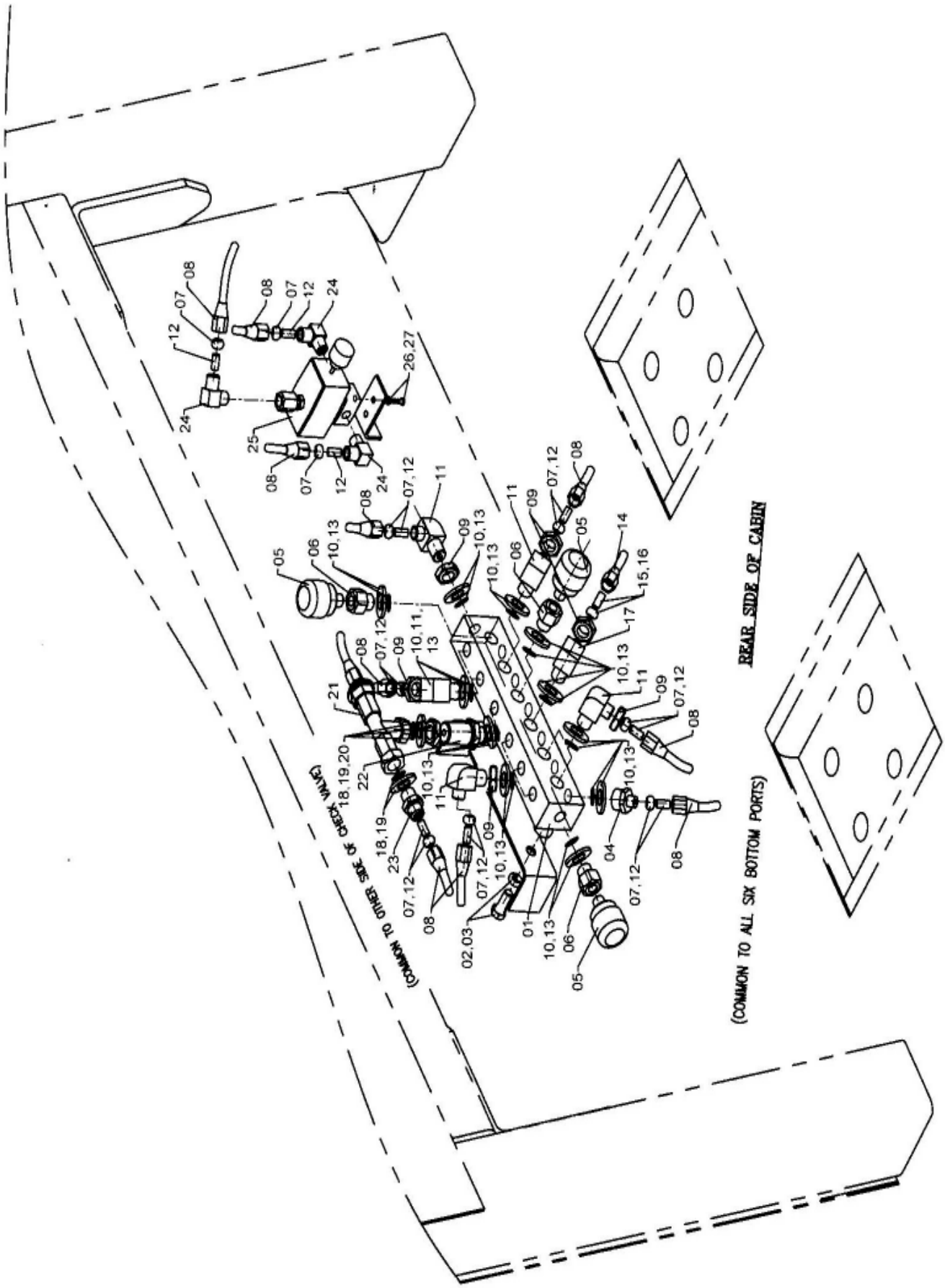

SLNO	PART NUMBER	DESCRIPTION	QTY	REMARKS
01	985-AS-13876	JOINT	1	
02	CFS13-51235	HEX. SCREW	2	
03	CFW01-11236	SPRING WASHER M12	2	
04	950-AS-13269	UNION BODY	6	
05	562-97-11140	L.P.SWITCH	3	
06	985-AS-13932	ADAPTOR	3	
07	950-AS-24609	INSERT 3/8"	19	
08	950-AS-13277	UNION NUT 3/8"	19	
09	950-AS-13511	LOCK NUT M16x2	10	
10	950-AS-15586	SPECIAL WASHER M16	20	
11	950-AS-23507	ELBOW	9	
12	950-AS-23289	SLEEVE 3/8"	19	
13	950-AS-65628	SEALING RING M16	20	
14	950-AS-13228	UNION NUT 1/4"	1	
15	950-AS-24617	INSERT 1/4"	1	
16	950-AS-23231	SLEEVE 1/4"	1	
17	950-AS-24577	ELBOW	1	
18	950-AS-65522	SEALING RING M22	2	
19	950-AS-15601	SPECIAL WASHER M22	2	
20	950-AS-13617	LOCK NUT M22x1.5	1	
21	950-AS-02236	DOUBLE CHECK VALVE	1	
22	950-AS-13803	DOUBLE SOCKET	1	
23	950-AS-13633	UNION BODY	1	
24	985-AS-13884	ELBOW	3	
25	283-95-14500	RETARDER VALVE	1	
26	CFS01-20616	HEX. SCREW M6	2	
27	985-AS-64136	‘O’ RING	2	

FIG. 92 AIR PIPING

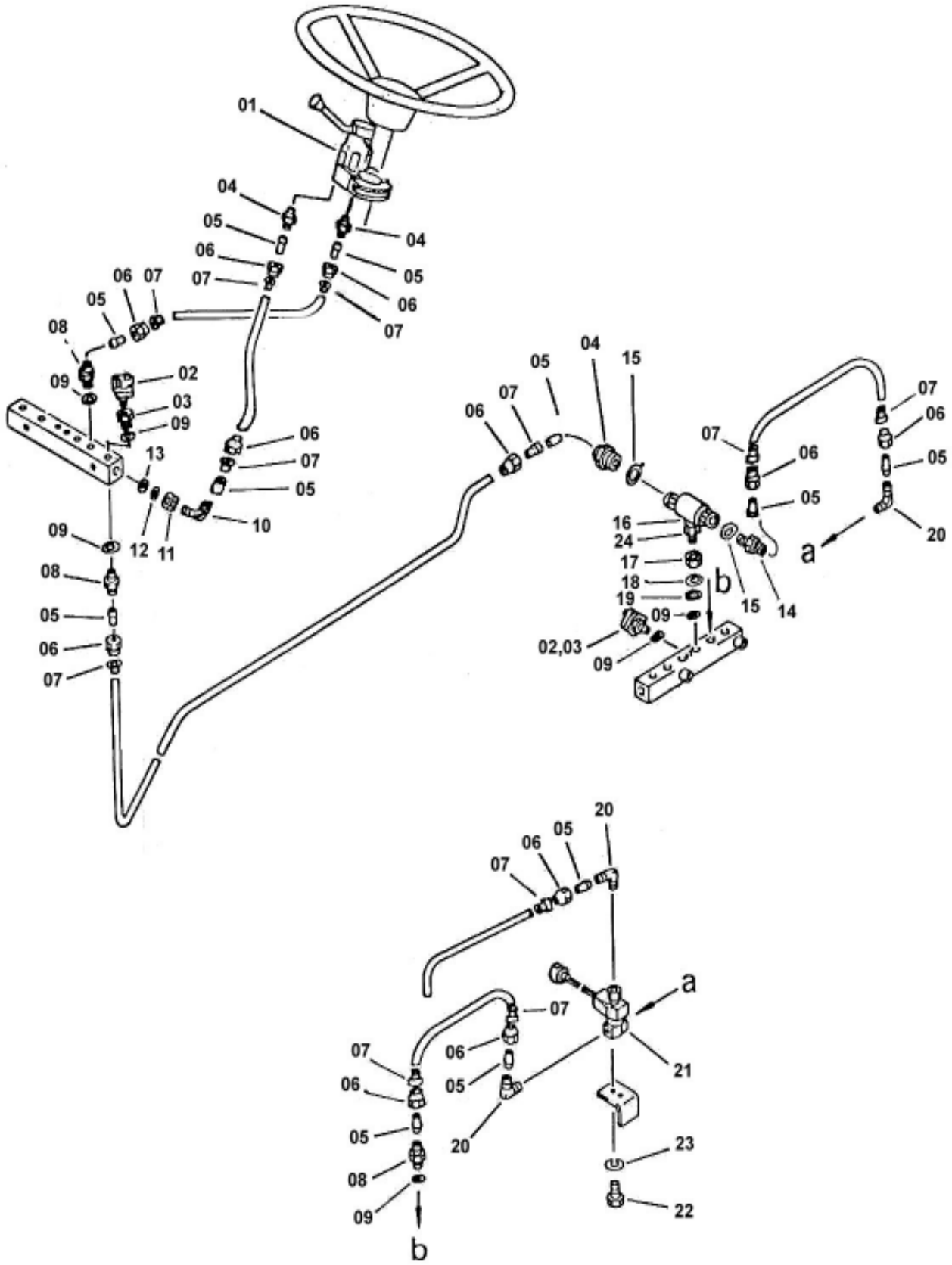

SLNO	PART NUMBER	DESCRIPTION	QTY	REMARKS
01	985-AS-02624	HAND BRAKE VALVE	1	
02	985-AS-02705	STOP LIGHT SWITCH	2	
03	985-AS-13932	ADAPTOR	2	
04	985-AS-13868	UNION	2	
05	950-AS-23289	SLEEVE 3/8"	11	
06	950-AS-13277	UNION NUT 3/8"	11	
07	950-AS-24609	INSERT 3/8"	11	
08	950-AS-13269	UNION BODY	3	
09	950-AS-15586	WASHER M16	6	
10	985-AS-23507	ELBOW	1	
11	950-AS-13511	LOCK NUT M16x2.0	1	
12	950-AS-15586	SPECIAL WASHER M16	1	
13	950-AS-65603	SEALING RING	7	
14	950-AS-13633	UNION BODY	2	
15	950-AS-23442	WASHER M22	2	
16	950-AS-02236	DOUBLE CHECK VALVE	1	
17	950-AS-13617	LOCK NUT M22x1.5	1	
18	950-AS-15613	SPECIAL WASHER M22	1	
19	950-AS-65522	SEALING RING M22	1	
20	950-AS-13884	ELBOW	3	
21	985-AS-02713	AUTO RETARDER VALVE	1	
22	CFS01-70512	CAP SCREW	2	
23	CFW01-10513	WASHER,SPRING	2	
24	985-AS-13803	DOUBLE SOCKET	1	

FIG. 93 AIR PIPING

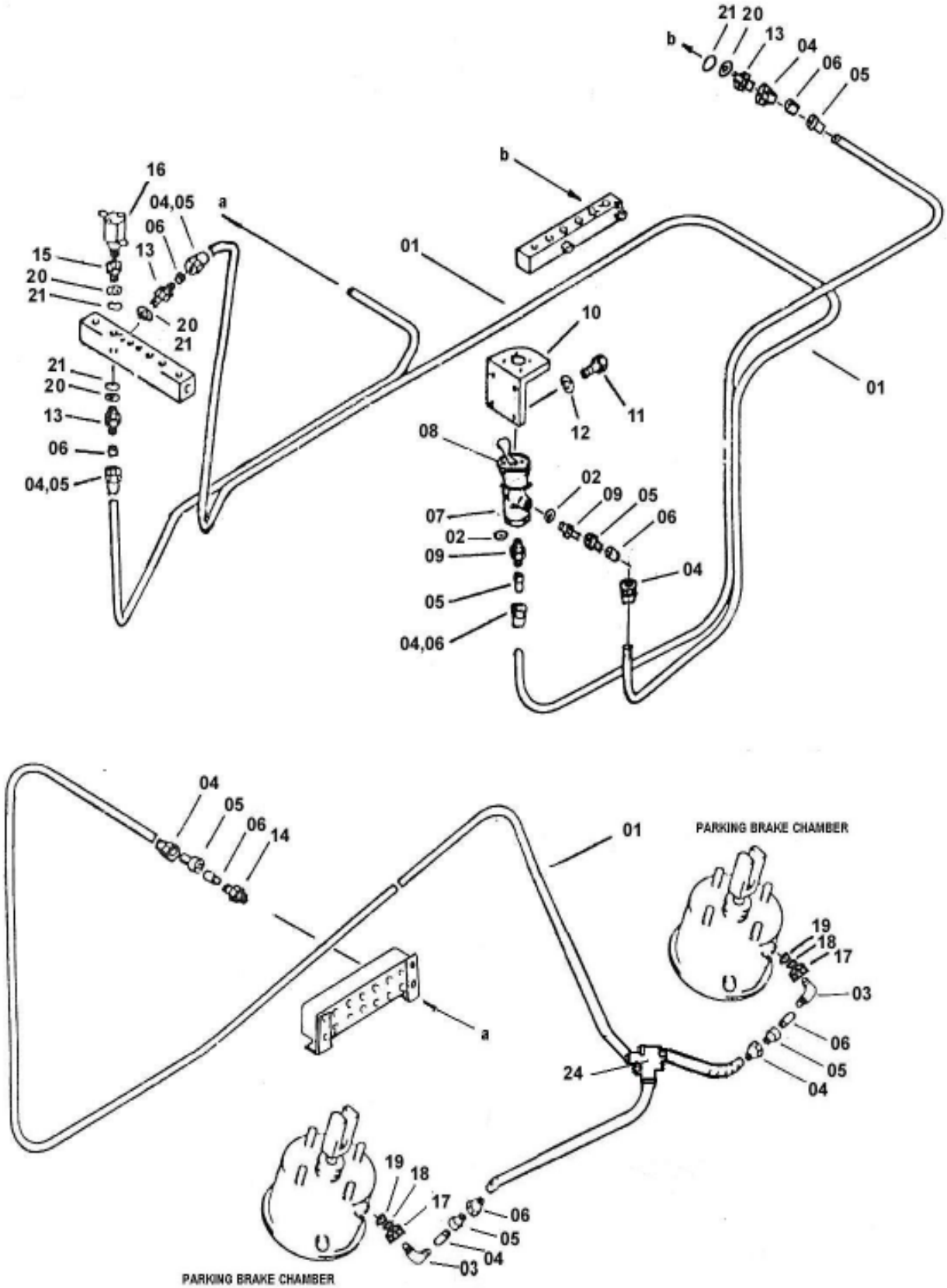

SLNO	PART NUMBER	DESCRIPTION	QTY	REMARKS
01	950-AS-74959	TUBE NYLON 3/8”	2	
02	950-AS-23231	WASHER M10	2	
03	950-AS-23694	ELBOW	3	
04	950-AS-13277	UNION NUT 3/8"	11	
05	950-AS-24609	INSERT 3/8"	11	
06	950-AS-23289	SLEEVE 3/8"	11	
07	950-AS-02536	L.T CONTROL VALVE	1	
08	950-AS-22568	DECAL PARKING	1	
09	950-AS-13828	UNION BODY	2	
10	985-AS-12109	BRACKET	1	
11	CFS01-20812	CAP SCREW	4	
12	CPW01-10825	WASHER,SPRING	4	
13	950-AS-13269	UNION BODY	2	
14	985-AS-13868	UNION	1	
15	985-AS-13932	ADAPTOR	1	
16	985 AS 02698	L.P.I. SWITCH	1	
17	950-AS-13617	LOCK NUT M22x1.5	1	
18	950-AS-15613	SPECIAL WASHER	1	
19	950-AS-65522	SEALING RING	1	
20	950-AS-15586	SPECIAL WASHER M16	2	
21	950-AS-65603	SEALING RING M16	6	
22	950-AS-13463	LOCK NUT M16x3/8”	2	
23	950-AS-24153	ELBOW M16x3/8”	2	
24	950-AS-02293	QUICK RELEASE VALVE	1	

FIG. 94 AIR PIPING (FLANGE ASSY. REF.)

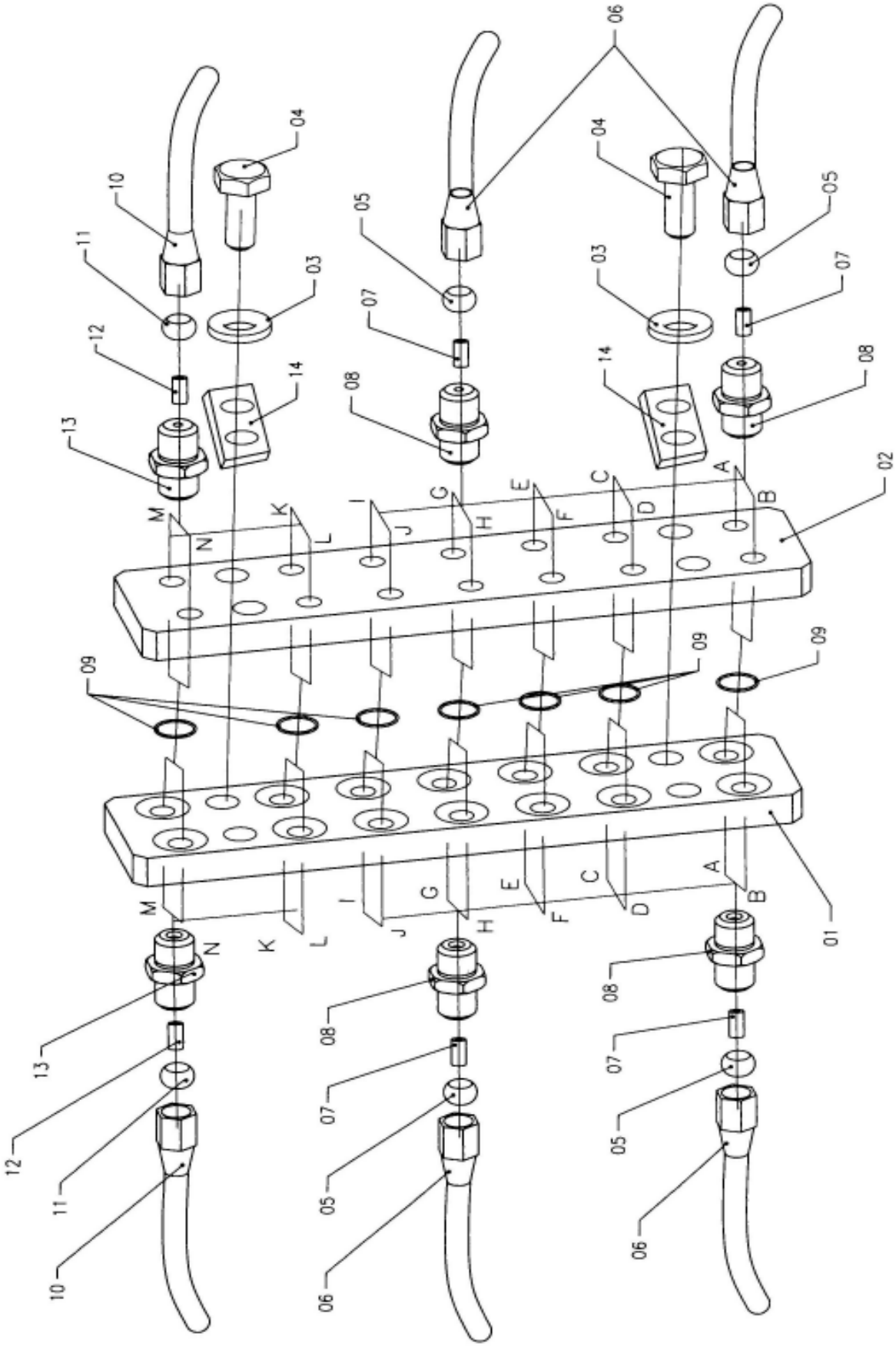

AIR PIPING (FLANGE ASSY. REF.) **FIG NO. 94**

SLNO	PART NUMBER	DESCRIPTION	QTY	REMARKS
01	985-AS-13916	FLANGE	1	
02	985-AS-13924	FLANGE	1	
03	CFW01-11236	SPRING WASHER M12	4	
04	CFB01-21255	HEX. BOLT M12	4	
05	950-AS-23289	SLEEVE 3/8"	20	
06	950-AS-13277	UNION NUT 3/8"	20	
07	950-AS-24609	INSERT 3/8"	20	
08	985-AS-13868	UNION	20	
09	07000-42018	‘O’ RING	14	
10	950-AS-13228	UNION NUT 1/4"	8	
11	950-AS-23231	SLEEVE 1/4"	8	
12	950-AS-24617	INSERT 1/4"	8	
13	985-AS-13892	UNION	8	
14	778-AS-02078	BRACKET STR.	2	

FIG. 95 AIR PIPING

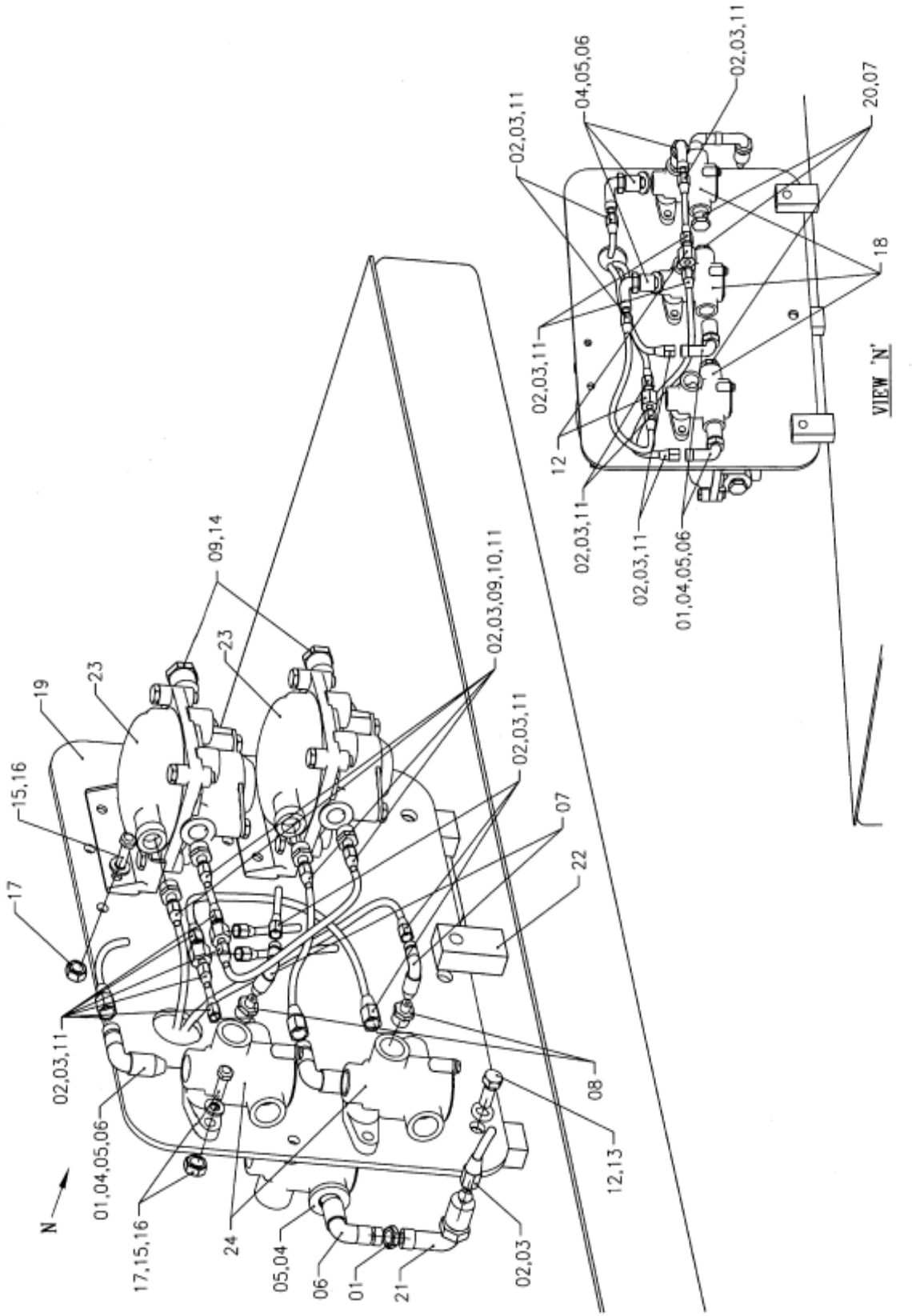

SLNO	PART NUMBER	DESCRIPTION	QTY	REMARKS
01	950-AS-13617	LOCK NUT M22x1.5	2	
02	950-AS-23289	SLEEVE 3/8"	22	
03	950-AS-13277	UNION NUT 3/8"	22	
04	950-AS-15613	SPECIAL WASHER M22	7	
05	950-AS-65522	SEALING RING M22	7	
06	950-AS-23694	ELBOW	7	
07	950-AS-20484	ELBOW	3	
08	950-AS-13633	UNION BODY	2	
09	950-AS-62339	SEALING RING M14	6	
10	950-AS-14135	UNION BODY	4	
11	950-AS-24609	INSERT 3/8"	21	
12	CFB01-21440	HEX. BOLT M12	3	
13	CFW01-11236	SPRING WASHER M12	3	
14	950-AS-14054	PLUG M16x1.5	2	
15	CFB01-20870	HEX. BOLT M8	14	
16	CFW05-08023	WAHSER	14	
17	CFN01-10868	HEX. NUT M8	14	
18	950-AS-02099	LIMITING & QUICK RELEASE VALVE	3	
19	985-AS-16557	PLATE	1	
20	950-AS-13496	PLUG M22x1.5	3	
21	950-AS-23507	ELBOW	1	
22	CPW25-12060	TAPPED PAD	3	
23	950-AS-02333	RELAY EMERGENCY VALVE	2	
24	950-AS-02106	INVERSION VALVE	2	

FIG. 96 AIR PIPING

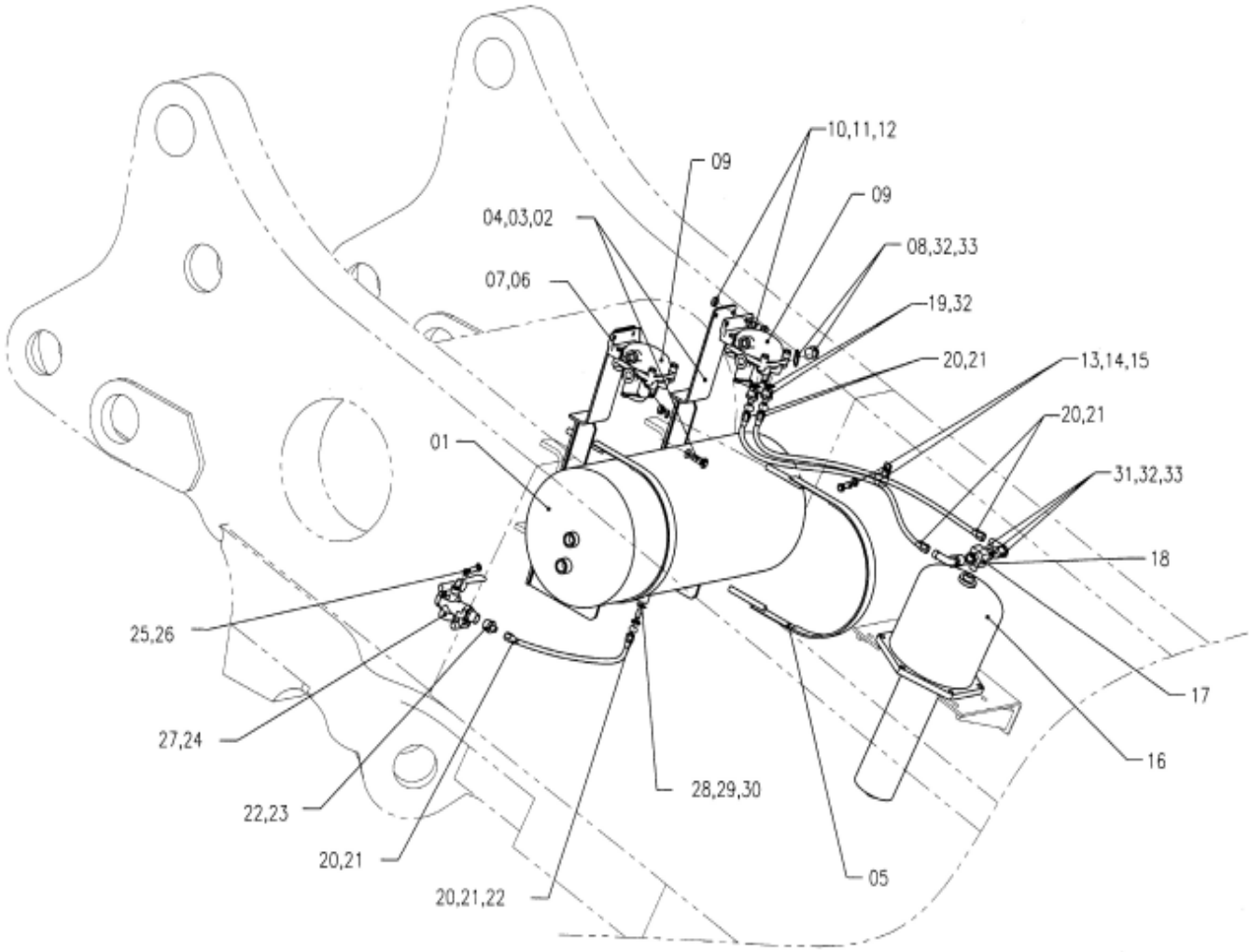

SLNO	PART NUMBER	DESCRIPTION	QTY	REMARKS
01	950-AS-02463	RESERVOIR 50LIT	1	
02	985-AS-02085	BRACKET STR.	2	
03	CFS02-31225	HEX. SCREW M12	4	
04	CFW01-11236	SPRING WASHER M12	4	
05	935-AS-02395	BAND ASSY.	2	
06	CFN01-21211	HEX. NUT M12	8	
07	CFW05-12032	WASHER	8	
08	950-AS-14054	PLUG M16x1.5	1	
09	950-AS-02333	RELAY EMERGENCY VALVE	2	
10	CFS01-20825	HEX. SCREW M8	4	
11	CFN01-10868	HEX. NUT M8	4	
12	CFW01-10825	SPRING WASHER M8	4	
13	CFS01-21020	HEX. SCREW M10	1	
14	CFW01-11030	SPRING WASHER M10	1	
15	VC 7673	CLAMP	1	
16	561-35-61201	BRAKE CHAMBER REAR	1	
17	985-AS-12077	JOINT	1	
18	950-AS-24163	ELBOW	2	
19	950-AS-14143	UNION BODY	2	
20	950-AS-23401	SLEEVE 5/8"	6	
21	985-AS-13796	UNION NUT 5/8"	6	
22	950-AS-13617	LOCK NUT M22x1.5	2	
23	950-AS-13788	UNION BODY	1	
24	950-AS-02552	SHUT OFF COCK	1	
25	CFB01-20870	HEX. BOLT M8	1	
26	CFW05-08023	WAHSER	1	
27	950-AS-62339	SEALING RING M14	1	
28	950-AS-65522	SEALING RING M22	1	
29	950-AS-15601	SPECIAL WASHER M22	1	
30	950-AS-23844	ELBOW	1	
31	950-AS-13463	LOCK NUT M16x1.5	2	
32	950-AS-15586	SPECIAL WASHER M16	2	
33	950-AS-65628	SEALING RING M16	2	

FIG. 97 AIR PIPING

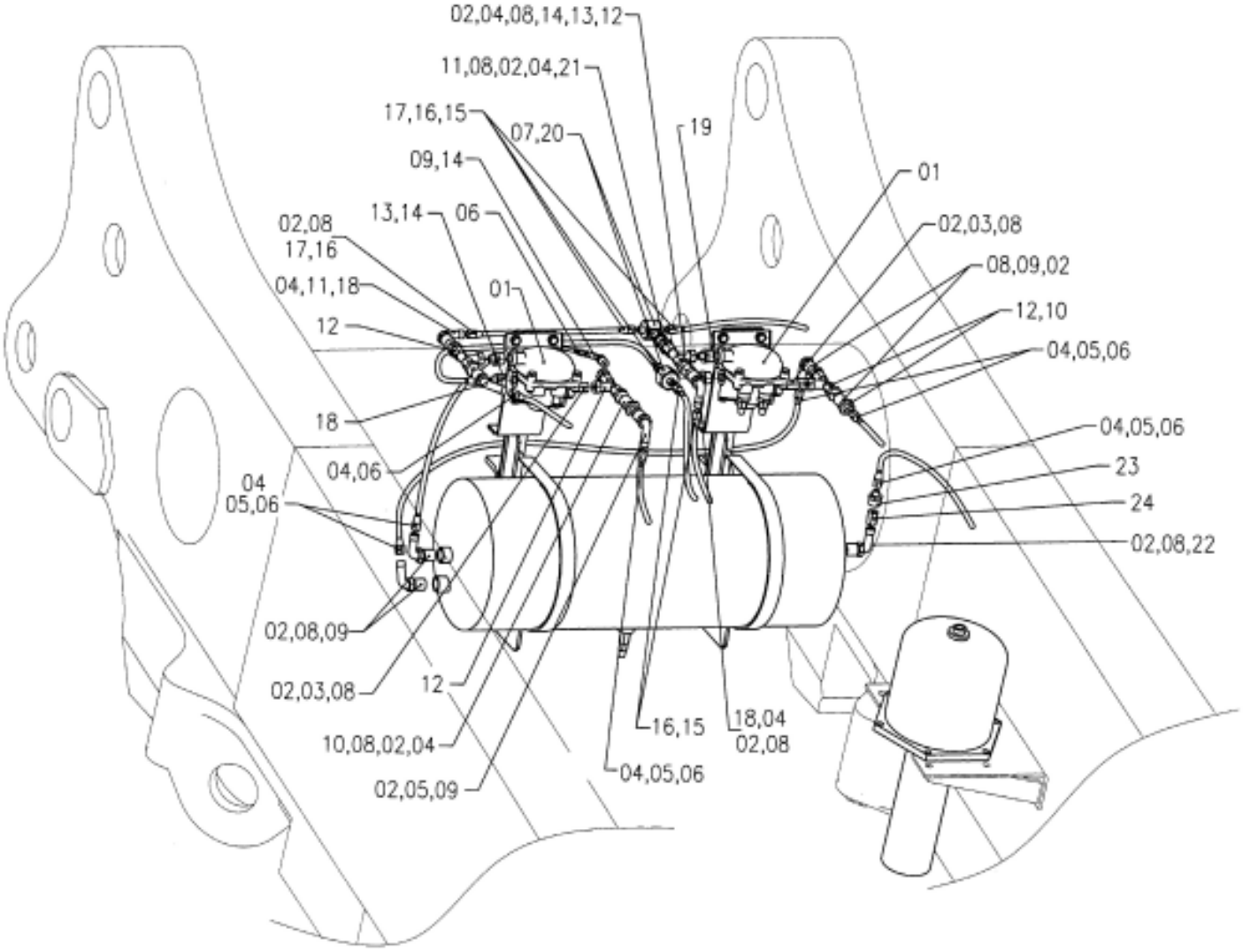

SLNO	PART NUMBER	DESCRIPTION	QTY	REMARKS
01	950-AS-02333	RELAY EMERGENCY VALVE	2	
02	950-AS-15601	SPECIAL WASHER M22	16	
03	950-AS-02114	NONRETURN VALVE	4	
04	950-AS-13617	LOCK NUT M22x1.5	15	
05	985-AS-13796	UNION NUT 5/8"	7	
06	950-AS-23401	SLEEVE 5/8"	8	
07	950-AS-13414	TEE CONNECTOR	1	
08	950-AS-65522	SEALING RING M22	18	
09	950-AS-23844	ELBOW	7	
10	950-AS-13666	DOUBLE SOCKET	2	
11	950-AS-13803	DOUBLE SOCKET	1	
12	950-AS-02236	DOUBLE CHECK VALVE	4	
13	950-AS-15594	SPECIAL WASHER M14	2	
14	950-AS-62339	SEALING RING M14	2	
15	950-AS-13277	UNION NUT 3/8"	4	
16	950-AS-23289	SLEEVE 3/8"	6	
17	950-AS-24609	INSERT 3/8"	4	
18	950-AS-23694	ELBOW	3	
19	950-AS-14662	DOUBLE SOCKET	2	
20	950-AS-65628	SEALING RING M16	2	
21	950-AS-15586	SPECIAL WASHER M16	2	
22	950-AS-23686	ELBOW	1	
23	950-AS-13788	UNION BODY	1	
24	950-AS-02171	NON RETURN VALVE	1	

FIG. 98 AIR PIPING

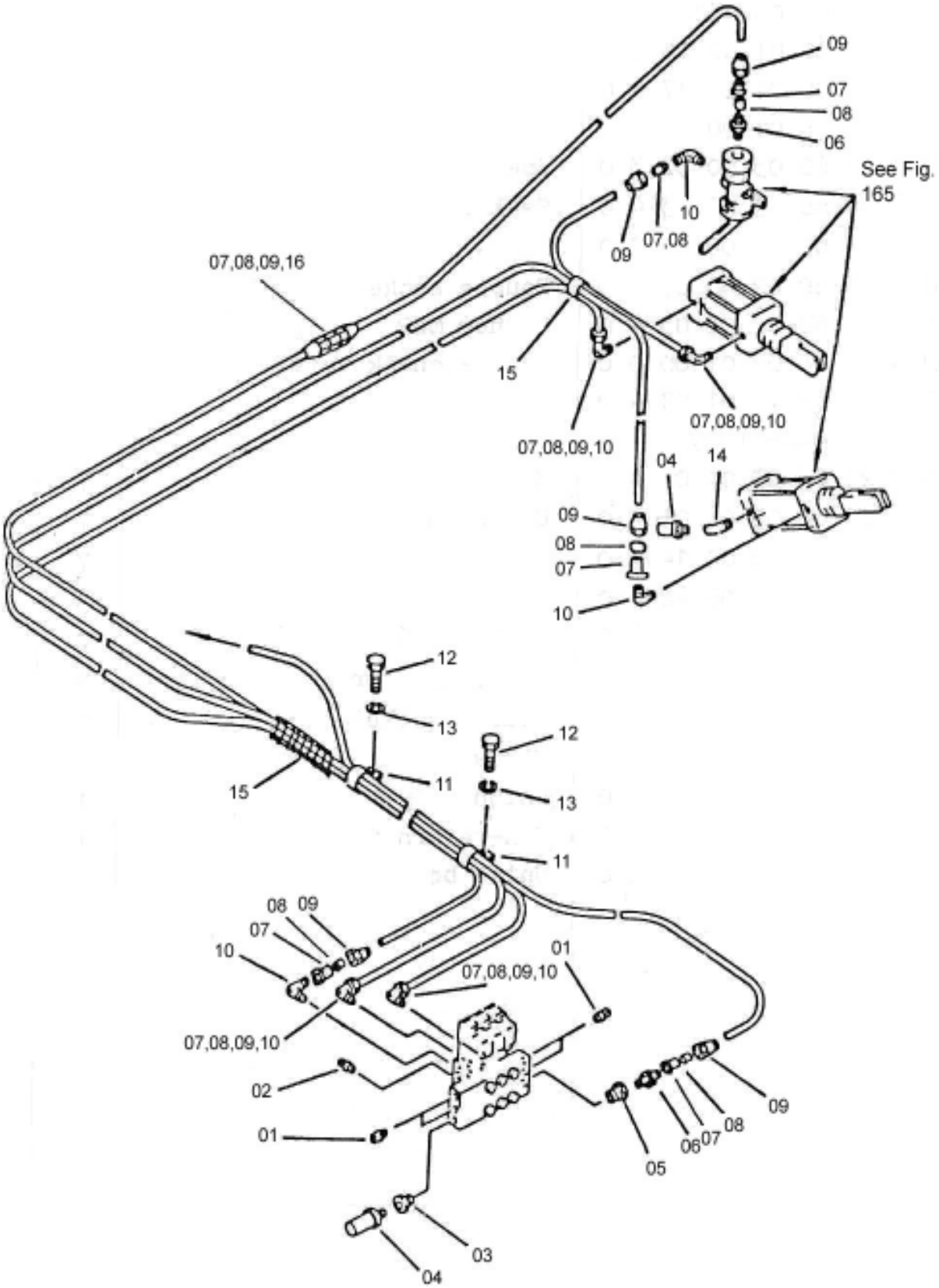

SLNO	PART NUMBER	DESCRIPTION	QTY	REMARKS
01	07042-00312	PLUG	6	
02	07043-00211	PLUG	3	
03	07326-10302	ADAPTOR	1	
04	07812-00246	MUFFLER	2	
05	07326-10302	ADAPTOR	1	
06	985-AS-13892	UNION	2	
07	950-AS-24617	INSERT 1/4"	11	
08	950-AS-23231	SLEEVE 1/4"	11	
09	950-AS-13228	UNON NUT 1/4"	11	
10	985-AS-13908	ELBOW	7	
11	CCC06-00814	CLIP	3	
12	CFS01-21016	SCREW	2	
13	CFW01-11030	WASHER,SPRING	2	
14	07323-30200	ELBOW	1	
15	985-AS-73793	SPIRAL TUBE	1	
16	950-AS-14354	PIPE CONNECTOR	1	
	985-SK-01014	SERVICE KIT (1/4")		
	985-SK-01022	SERVICE KIT (3/8")		
	985-SK-01039	SERVICE KIT (5/8")		

FIG. 99 SHUT OFF COCK INST.

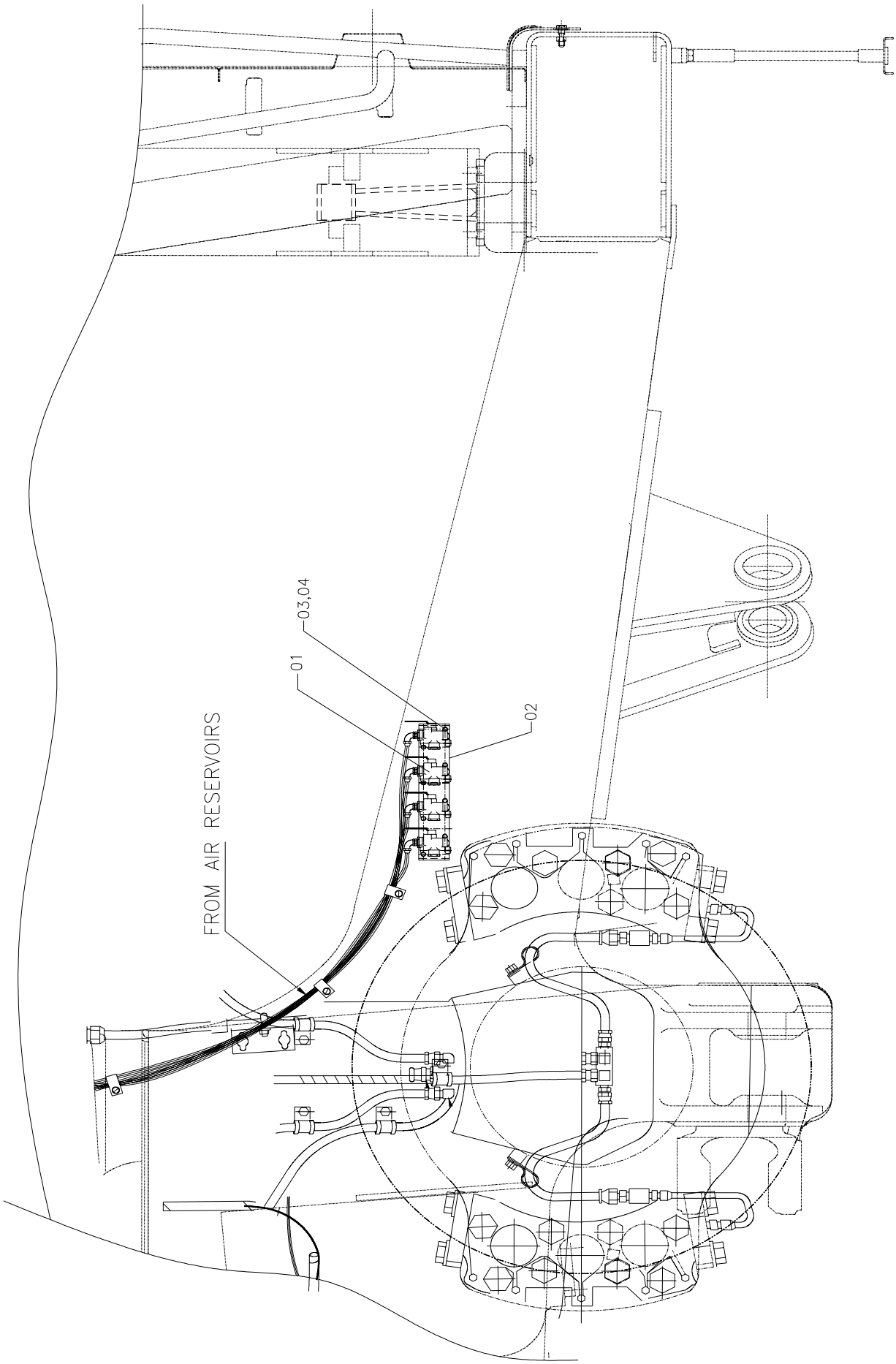

SHUT OFF COCK INST.

FIG NO. 99

SLNO	PART NUMBER	DESCRIPTION	QTY	REMARKS
01	950-AS-02552	SHUT OFF COCK	4	
02	953-AS-02085	PLATE STR.	1	
03	CFB01-20870	HEX. BOLT M8	8	
04	CFW05-08023	WAHSER	8	

FIG. 100 BRAKE OIL PIPING FRONT (1/2)

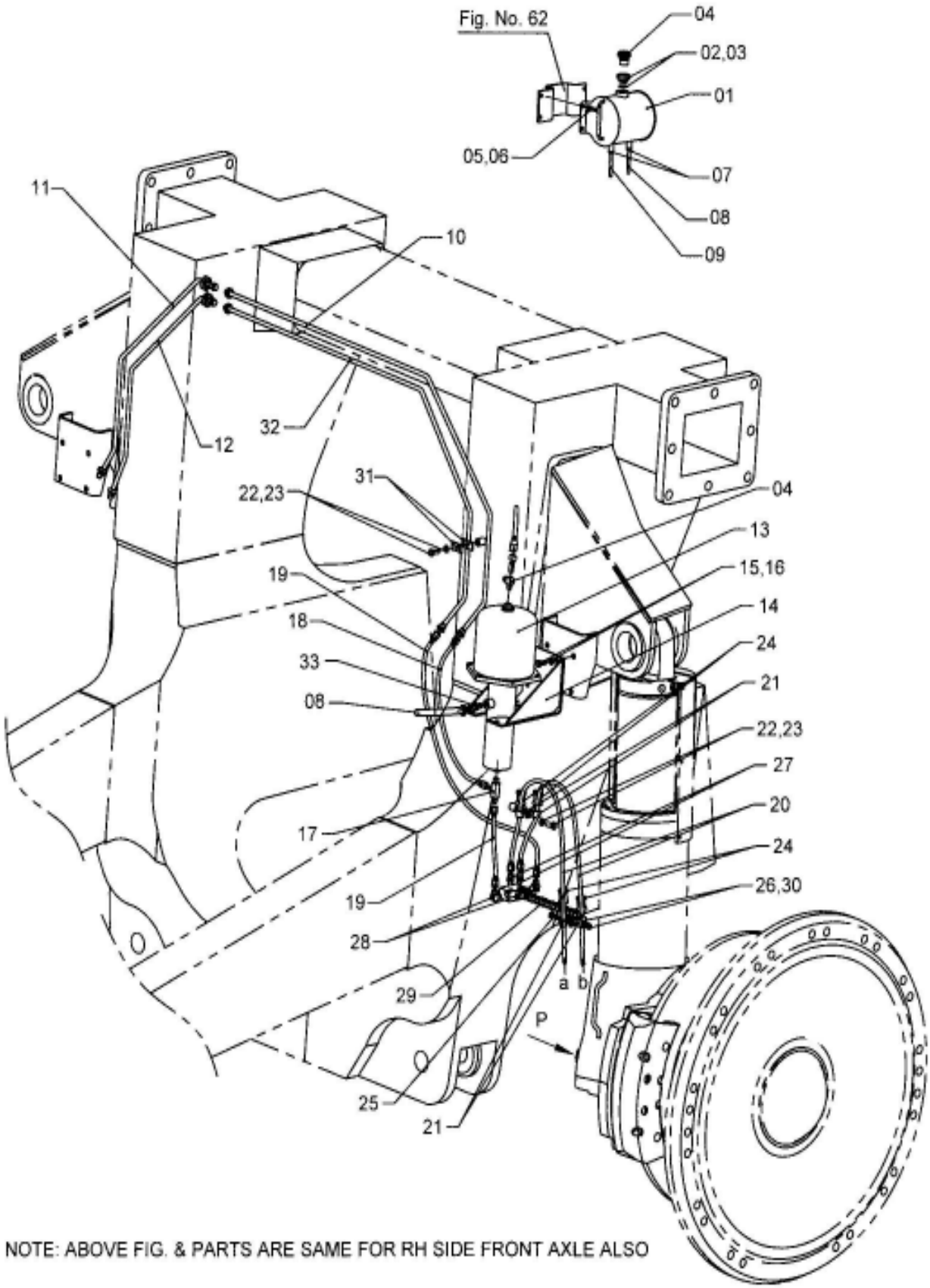

NOTE: ABOVE FIG. & PARTS ARE SAME FOR RH SIDE FRONT AXLE ALSO

BRAKE OIL PIPING FRONT (1/2) **FIG NO. 100**

SLNO	PART NUMBER	DESCRIPTION	QTY	REMARKS
01	985-AS-02576	BRAKE OIL TANK	1	
02	985-AS-02121	PLUG	1	
03	07003-13036	GASKET	1	
04	SR 2586	BREATHER	1	
05	CFS01-20825	SCREW	4	
06	CFW05-08023	WASHER	4	
07	CCC01-02507	HOSE CLIP	2	
08	07261-21445	HOSE	1	
09	07261-21420	HOSE	1	
10	985-AS-0225 1	TUBE ASSY	1	
11	985-AS-04058	TUBE ASSY	1	
12	985-AS-04041	TUBE ASSY	1	
13	985 AS 02608	BRAKE CHAMBER (FRONT)	1	
14	985-AS-02535	BRACKET	1	
15	CFS01-21220	SCREW	4	
16	CFW05-12032	WASHER	4	
17	985-AS-11526	TEE	2	
18	CHH03-00606	HOSE	2	
19	CHH03-00608	HOSE	8	
20	CHH03-00611	HOSE	4	
21	CCC05-22135	CLIP	8	
22	CFS01-21016	HEX. SCREW	11	
23	CFW01-11030	SPRING WASHER	11	
24	985-AS-64039	INSULATOR	8	
25	CFS01-21020	HEX. SCREW	2	
26	CFN01-11084	NUT	2	
27	985-AS-14045	NIPPLE	6	
28	985-AS-14053	ELBOW	4	
29	985-AS-14078	SPRING	2	
30	985-AS-14101	PLATE	2	
31	985-AS-15633	CLIP	14	
32	985-AS-02243	TUBE ASSY	1	
33	985-AS-13965	NIPPLE	1	

FIG. 101 BRAKE OIL PIPING FRONT (2/2)

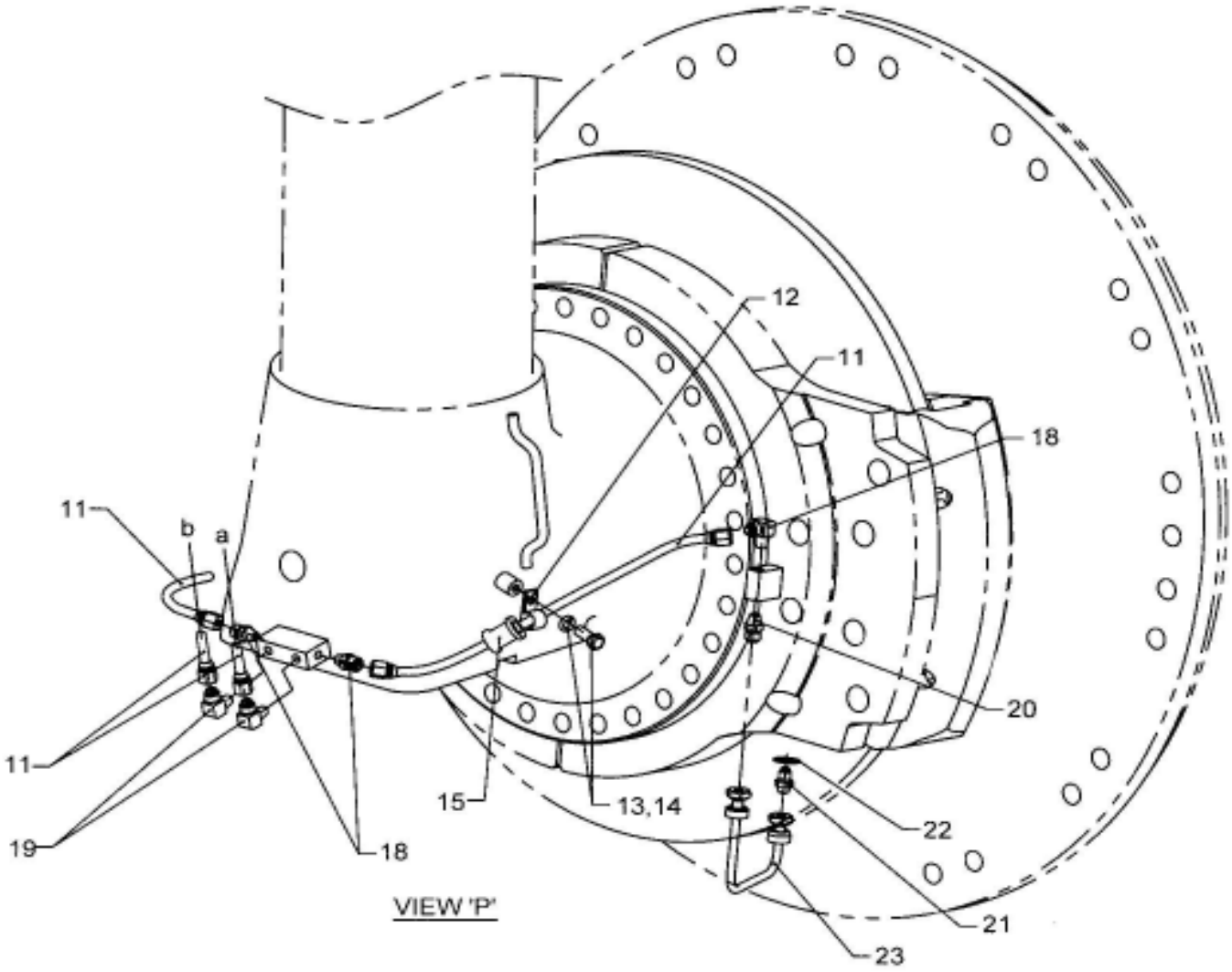

NOTE: ABOVE FIG. & PARTS ARE SAME FOR REAR SIDE OF THE AXLE ALSO.

BRAKE OIL PIPING FRONT (2/2) **FIG NO. 101**

SLNO	PART NUMBER	DESCRIPTION	QTY	REMARKS
01	985-AS-02608	BRAKE CHAMBER FRONT	1	
02	985-AS-02535	BRACKET	1	
03	CFS01-21230	HEX. SCREW	4	
04	CFW01-11236	SPRING WASHER	4	
05	985-AS-02138	NIPPLE	2	
06	07261-21420	HOSE	1	
07	07281-00259	HOSE CLAMP	2	
08	985-AS-11526	NIPPLE	1	
09	CHH03-00608	HOSE ASSY	1	
10	CHH03-00608	HOSE ASSY	3	
11	CHH03-00611	HOSE ASSY	3	
12	CCC05-22135	CLIP	6	
13	CFS01-21016	HEX. SCREW	4	
14	CFW01-11030	SPRING WASHER	4	
15	985-AS-64039	INSULATOR	6	
16	CFS01-21020	SCREW	2	
17	CFN01-11084	NUT	2	
18	985-AS-14045	NIPPLE	6	
19	985-AS-14053	ELBOW	4	
20	07238-10210	NIPPLE	2	
21	452-HS-15048	NIPPLE	2	
22	985-AS-64136	O- RING	2	
23	985-AS-02049	TUBE ASSY	2	

FIG. 102 BRAKE OIL PIPING (REAR)

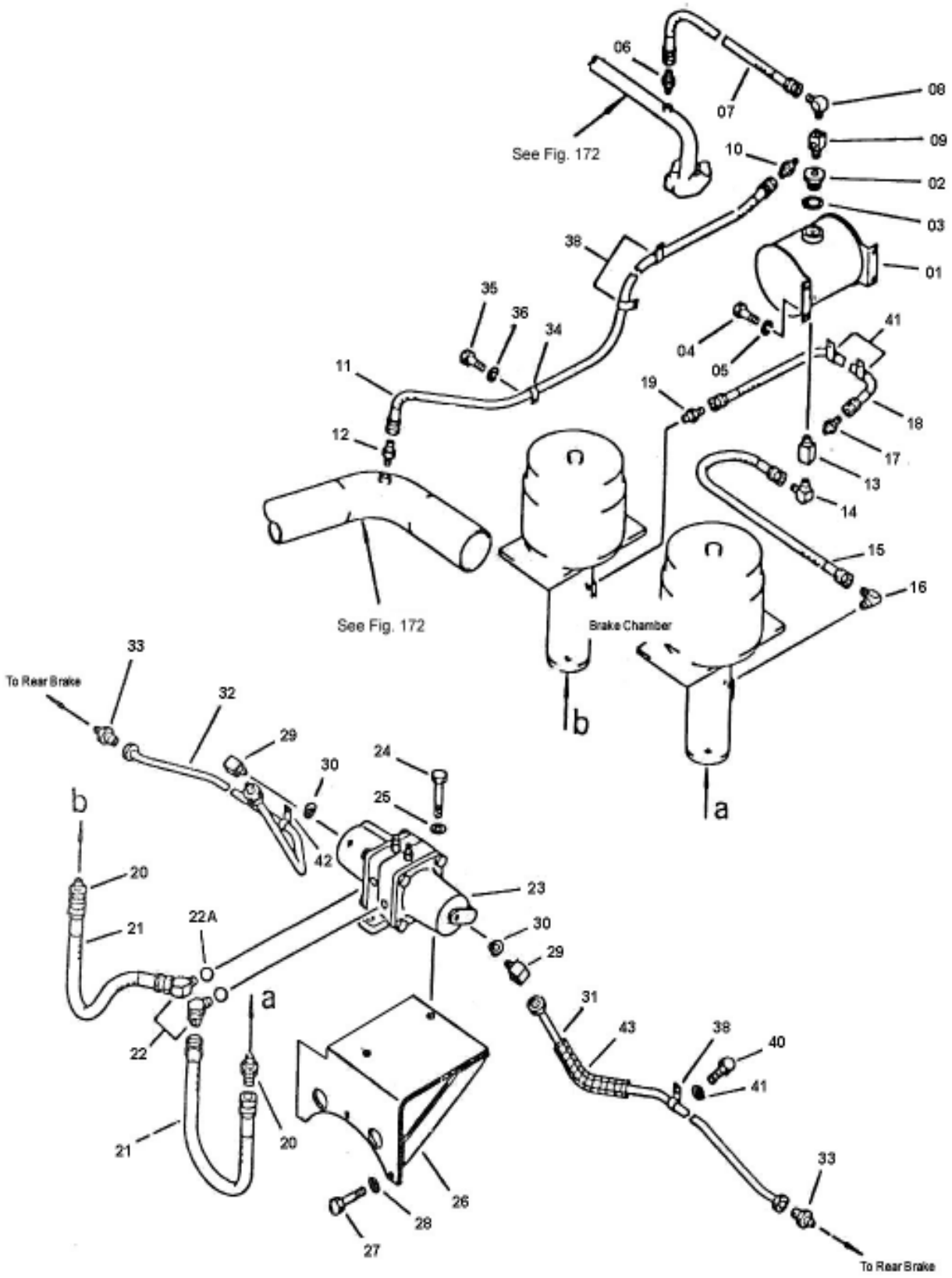

BRAKE OIL PIPING (REAR) FIG NO. 102

SLNO	PART NUMBER	DESCRIPTION	QTY	REMARKS
01	778-AS-01121	TANK ASSY,BRAKE OIL	1	
02	985-AS-02121	PLUG	1	
03	07003-13036	GASKET	1	
04	CFS01-20825	SCREW	4	
05	CFW01-10825	WASHER,SPRING	4	
06	985-AS-13957	NIPPLE	1	
07	07102-20309	HOSE	1	
08	985-AS-14053	ELBOW	1	
09	985-AS-13981	JOINT	1	
10	985-AS-14045	NIPPLE	1	
11	07102-20330	HOSE	1	
12	985-AS-13957	NIPPLE	1	
13	985-AS-13981	JOINT	1	
14	985-AS-13957	ELBOW	1	
15	07102-20304	HOSE	1	
16	985-AS-14061	ELBOW	1	
17	985-AS-14045	NIPPLE	1	
18	07102-20316	HOSE	1	
19	985-AS-13957	NIPPLE	1	
20	985-AS-13965	NIPPLE	2	
21	07113-00509	HOSE	2	
22	985-AS-02105	ELBOW	2	
22A	07002-02034	O-RING	2	
23	985-AS-02721	SLACK ADJUSTER ASSY	1	
24	CFB07-21450	BOLT	2	
25	CFW05-14045	WASHER	2	
26	985-AS-02584	BRACKET	1	
27	CFS01-21230	SCREW	2	
28	CFW05-12032	WASHER	2	
29	985-AS-02113	ELBOW	2	
30	07002-02034	O-RING	2	
31	07113-00511	HOSE LH	1	
32	07113-00511	HOSE RH	1	
33	07238-00522	CONNECTOR	2	
34	CCC06-22514	CLIP	3	
35	CFS01-21020	SCREW	3	

FIG. 102 BRAKE OIL PIPING (REAR)

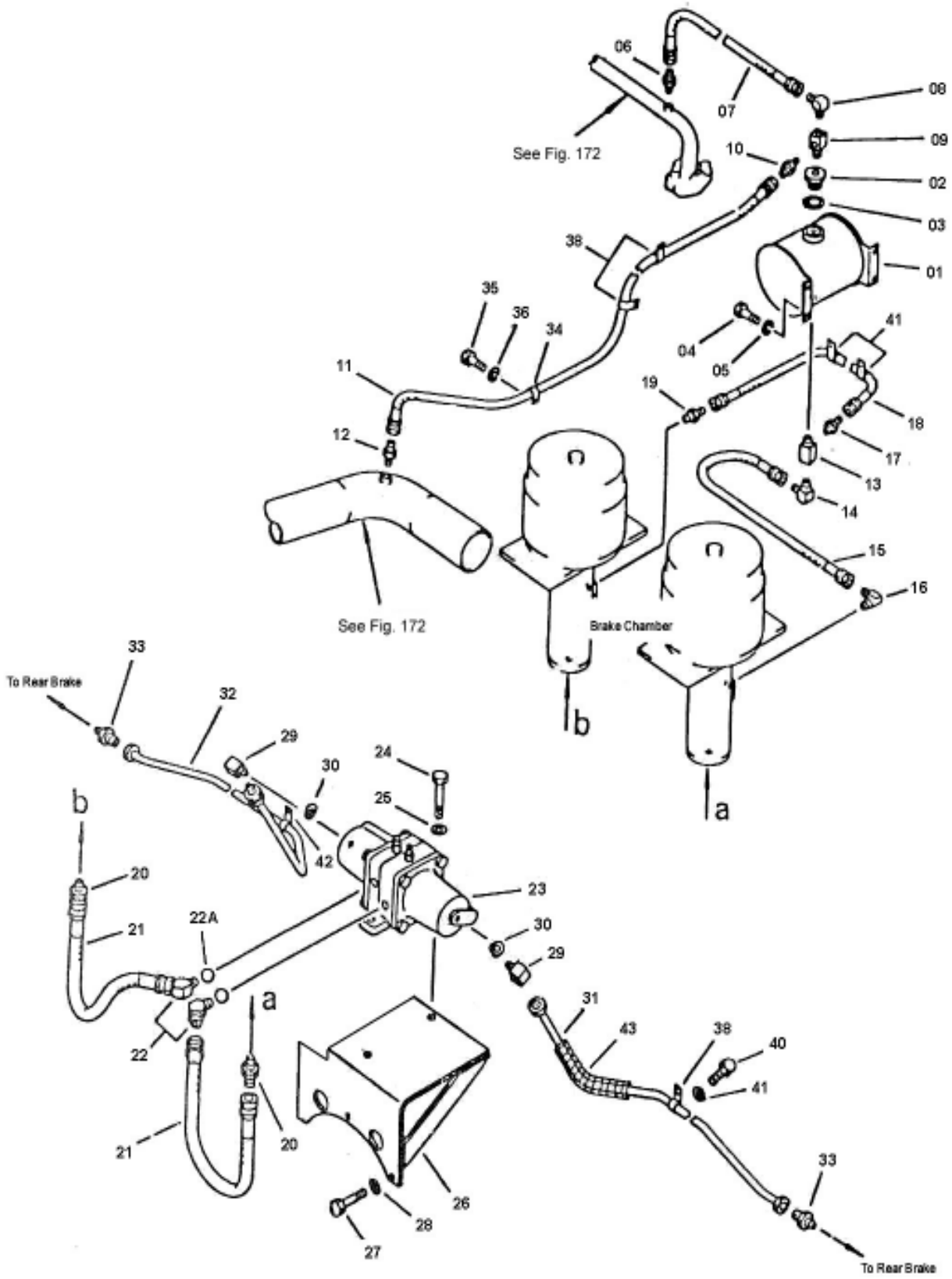

SLNO	PART NUMBER	DESCRIPTION	QTY	REMARKS
36	CFW01-11030	WASHER,SPRING	3	
37	CCC06-22514	CLIP	2	
38	985-AS-02187	CLIP	2	
39	985-AS-64096	INSULATOR	2	
40	CFS01-21025	SCREW	2	
41	CFW05-10032	WASHER	2	

FIG. 103 AIR PIPING (CIRCUIT DIAGRAM)

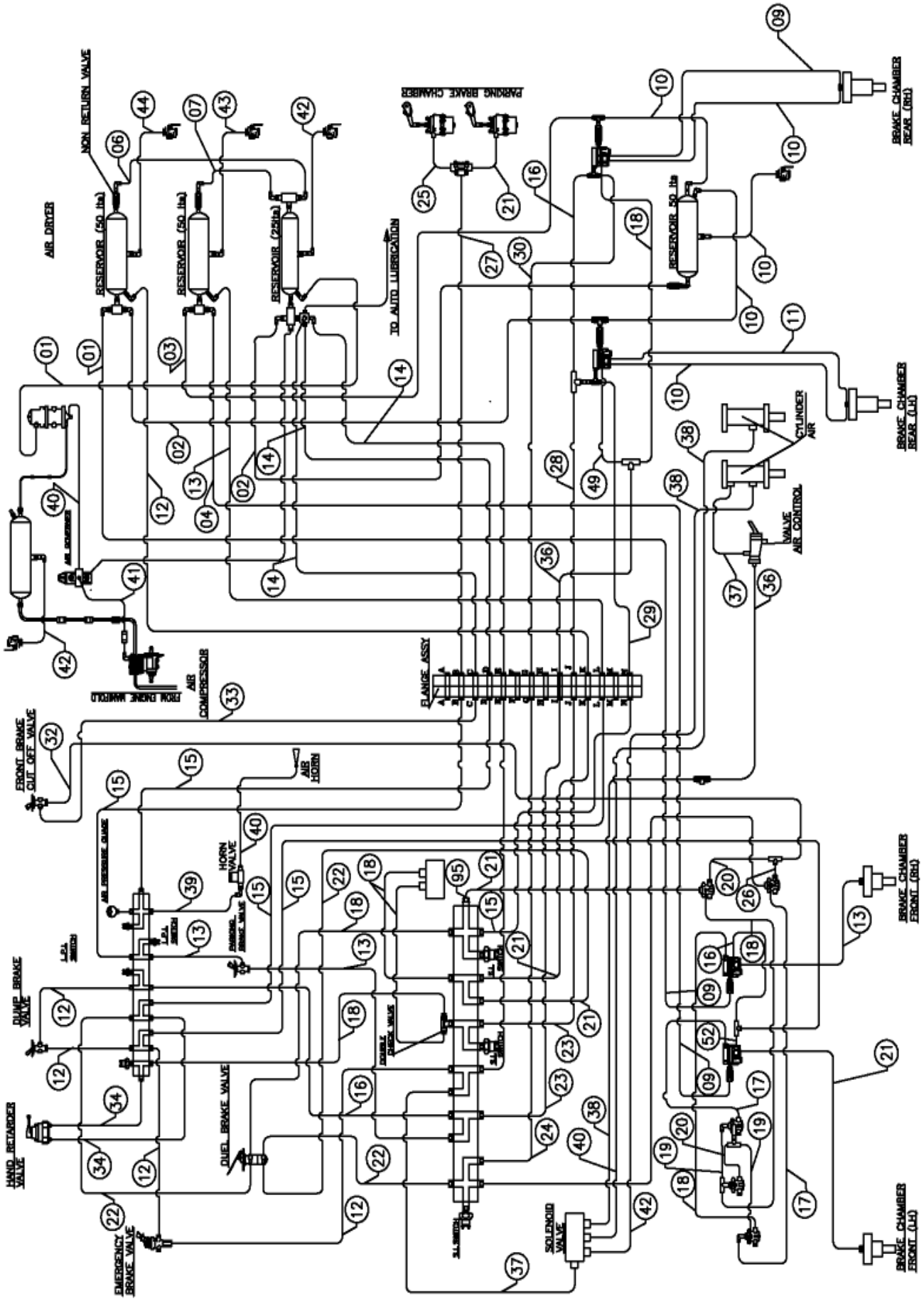

SLNO	PART NUMBER	DESCRIPTION	QTY	REMARKS
01	985-AS-72788	TUBE 5/8" OD	2	L=3000
02	985-AS-74634	TUBE 5/8" OD	2	L=9600
03	985-AS-74642	TUBE 5/8" OD	1	L=9700
04	953-AS-76914	TUBE 5/8" OD	1	L=2800
05	953-AS-76906	TUBE 5/8" OD	1	L=4500
06	953-AS-74618	TUBE 5/8" OD	1	L=600
07	985-AS-74667	TUBE 5/8" OD	1	L=3000
08	953-AS-71731	TUBE 5/8" OD	3	L=4030
09	985-AS-74659	TUBE 5/8" OD	4	L=1600
10	985-AS-74683	TUBE 5/8" OD	1	L=700
11	985-AS-74691	TUBE 5/8" OD	2	L=900
12	953-AS-76882	TUBE 3/8" OD	5	L=4400
13	985-AS-74715	TUBE 3/8" OD	4	L=3040
14	985-AS-74723	TUBE 3/8" OD	3	L=2700
15	985-AS-74972	TUBE 3/8" OD	6	L=1700
16	985-AS-74748	TUBE 3/8" OD	3	L=500
17	985-AS-74756	TUBE 3/8" OD	2	L=700
18	985-AS-74764	TUBE 3/8" OD	6	L=600
19	985-AS-74772	TUBE 3/8" OD	2	L=150
20	985-AS-74789	TUBE 3/8" OD	2	L=350
21	985-AS-74975	TUBE 3/8" OD	3	L=1500
22	985-AS-74804	TUBE 3/8" OD	4	L=3350
23	935-AS-71886	TUBE 3/8" OD	3	L=1800
24	953-AS-76874	TUBE 3/8" OD	1	L=1850
25	985-AS-72803	TUBE 3/8" OD	1	L=2500
26	452-AS-10212	TUBE 3/8" OD	2	L=700
27	985-AS-74845	TUBE 3/8" OD	1	L=7000
28	985-AS-74853	TUBE 3/8" OD	1	L=7100
29	985-AS-74861	TUBE 3/8" OD	1	L=6800
30	985-AS-74878	TUBE 3/8" OD	1	L=7200
31	985-AS-74886	TUBE 3/8" OD	1	L=7400
32	935-AS-72039	TUBE 3/8" OD	1	L=4000
33	953-AS-76899	TUBE 3/8" OD	1	L=2800
34	787-AS-70239	TUBE 3/8" OD	1	L=4600
35	787-AS-70344	TUBE 3/8" OD	1	L=1150
36	985-AS-75096	TUBE 1/4" OD	4	L=1100
37	985-AS-75047	TUBE 1/4" OD	2	L=350

FIG. 103 AIR PIPING (CIRCUIT DIAGRAM)

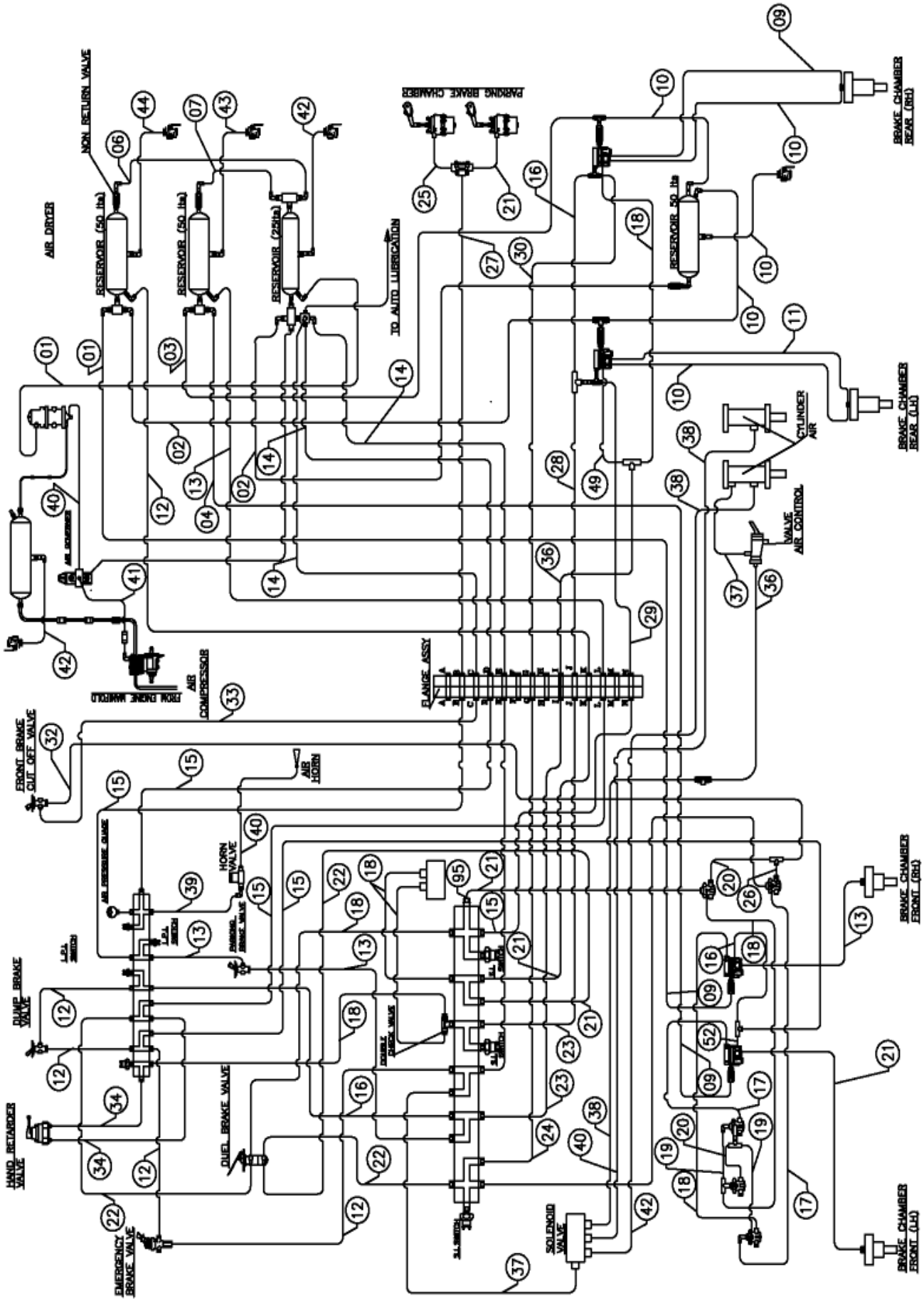

SLNO	PART NUMBER	DESCRIPTION	QTY	REMARKS
38	985-AS-75088	TUBE 1/4" OD	1	L=3350
39	985-AS-75014	TUBE 1/4" OD	1	L=700
40	985-AS-71507	TUBE 1/4" OD	3	L=5275
41	985-AS-75014	TUBE 1/4" OD	1	L=700
42	953-AS-76955	TUBE 5/8" OD	1	L=3650
43	953-AS-76963	TUBE 5/8" OD	1	L=3350
44	953-AS-76917	TUBE 5/8" OD	1	L=3740

FIG. 104 DUAL BRAKE VALVE

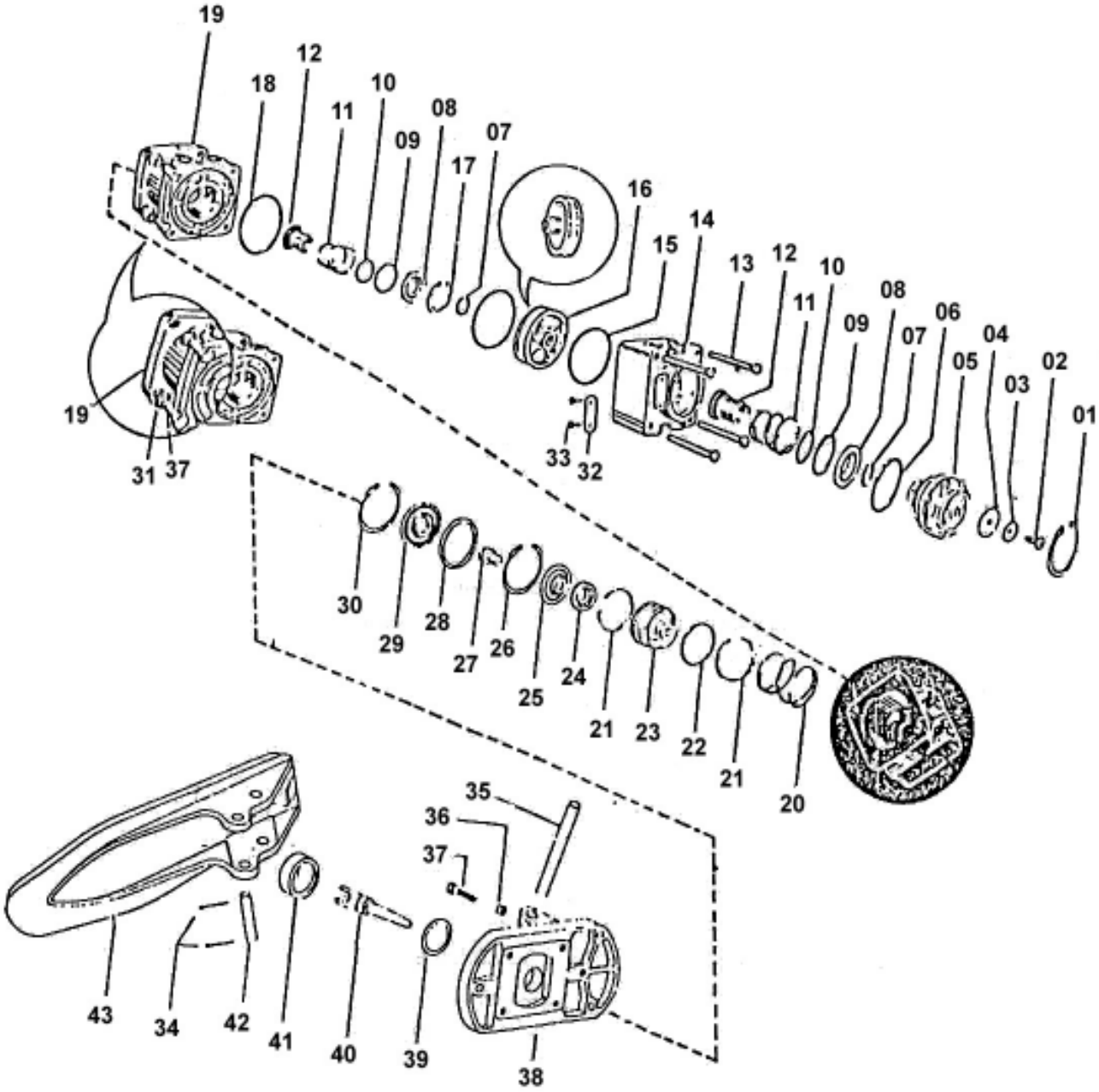

SLNO	PART NUMBER		DESCRIPTION	QTY	REMARKS
	950-AS-02528		DUAL BRAKE VALVE	1	
01	950-AS-12134	*	INTERNAL CIRCLIP	1	
02	950-AS-14313		SELF TAPING SCREW	1	
03	950-AS-12418		CAP	1	
04	950-AS-12297	*	WASHER (KIT)		
05	950-AS-12401		VENTING GUIDE	1	
06	950-AS-62128	*	O-RING (KIT)	1	
07	950-AS-62111	*	O-RING (KIT)	2	
08	950-AS-12086		SEALING RING SPACER	2	
09	950-AS-62096	*	O-RING (KIT)	2	
10	950-AS-62103	*	O-RING (KIT)	2	
11	950-AS-12078	*	CONICAL SPRING	2	
12	950-AS-12053	*	VALVE (KIT)	2	
13	950-AS-12175		SCREW	4	
14	950-AS-12434		BODY LOWER	1	
15	950-AS-62152	*	O-RING (KIT)	2	
16	950-AS-12142		PISTON	1	
17	950-AS-12312	*	INTERNAL CIRCLIP	1	
18	950-AS-62169	*	O-RING (KIT)	1	
19	950-AS-12426		BODY UPPER	1	
20	950-AS-12256		SPRING	1	
21	950-AS-12248	*	GUIDE RING (KIT)	2	
22	950-AS-62233	*	O-RING (KIT)	1	
23	950-AS-12183		PISTON	1	
24	950-AS-12191	*	RUBBER SPRING (KIT)	1	
25	950-AS-12207	*	SPRING SEAT (KIT)	1	
26	950-AS-12223	*	INTERNAL CIRCLIP	1	
27	950-AS-12215		STEM	1	
28	950-AS-12264		SPACER	1	
29	950-AS-62274	*	BOOT (KIT)	1	
30	950-AS-12289	*	INTERNAL CIRCLIP	1	
31	950-AS-13122		SPRING WASHER	4	
32	950-AS-13163		SCREW	4	
33	950-AS-13455		SPLIT PIN	4	
34	950-AS-12361		PIN	1	
35	950-AS-13155		NUT	1	

FIG. 104 DUAL BRAKE VALVE

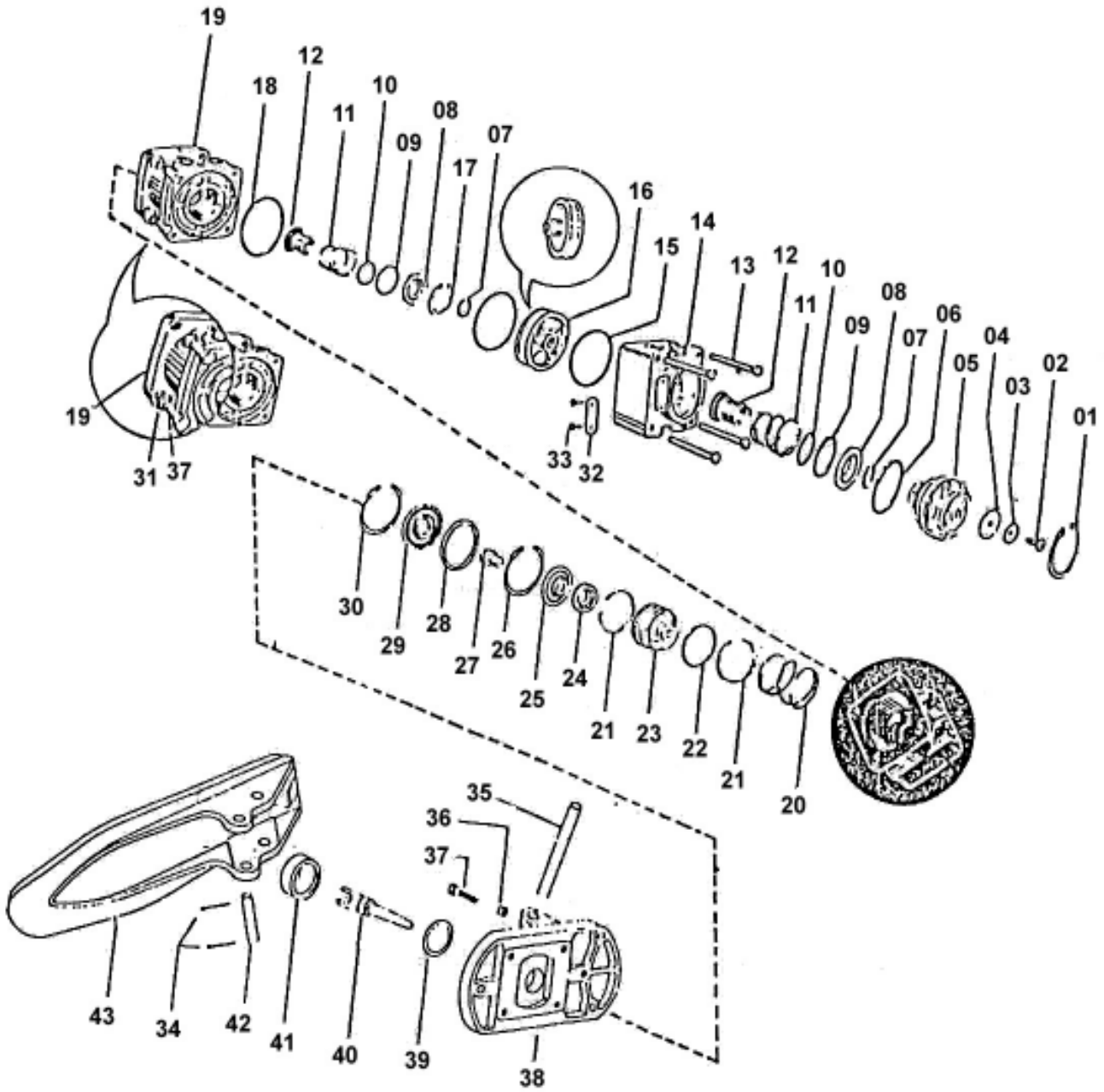

SLNO	PART NUMBER	DESCRIPTION	QTY	REMARKS
36	950-AS-13163	SCREW	5	
37	950-AS-12061	MOUNTING PLATE	1	
38	905-AS-12394	PLUNGER	1	
39	950-AS-62793	* BOOT (KIT)	1	
40	950-AS-12353	PIN	1	
41	950-AS-12386	TREADLE	1	
	950-SK-00181	* REPAIR KIT	1	

FIG. 105 RETARDER VALVE

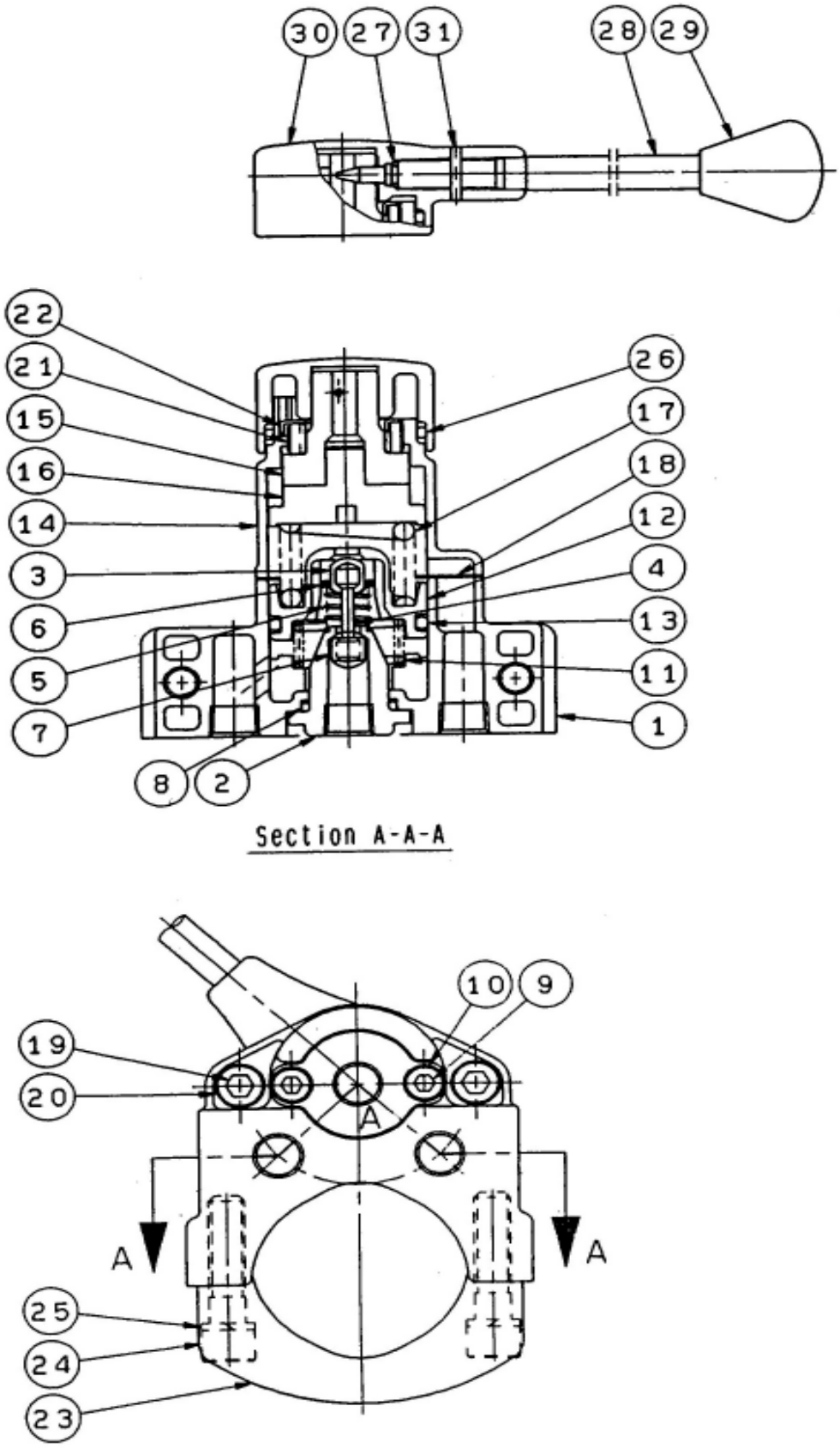

SLNO	PART NUMBER		DESCRIPTION	QTY	REMARKS
	985-AS-02624		HAND RETARDER VALVE ASSY	1	
01	985-AS-15641	*	BODY	1	
02	985-AS-03248	*	INLET EXHAUST VALVE ASSY	1	
02	985-AS-15658	*	INLET VALVE SEAT	1	
03	985-AS-03256	**	STEM COMP.	1	
03	985-AS-15666	**	INLET (& EXHAUST) VALVE	1	
04	985-AS-15674	**	STEM	1	
05	985-AS-15682	*	VALVE SPRING	1	
06	985-AS-15699	*	VALVE GUIDE (KIT)	1	
07	985-AS-15706	*	(INLET &) EXHAUST VALVE	1	
08	985-AS-65716	*	O-RING	1	
09	985-AS-15722	*	BOLT	2	
10	985-AS-15739	*	LOCK WASHER	2	
11	985-AS-15747	*	PISTON RETURN SPRING (KIT)	1	
12	985-AS-15755	*	PISTON	1	
13	985-AS-65765	*	O-RING (KIT)	1	
14	985-AS-15771	*	COVER	1	
15	985-AS-03264	*	CAM & CAM-FOLLOWER ASSY	1	
15	985-AS-15788	**	CAM-FOLLOWER (KIT)	1	
16	985-AS-15796	**	CAM (KIT)	1	
17	985-AS-15803	*	GRADUATING SPRING	1	
18	985-AS-75817	*	GASKET (KIT)	1	
19	985-AS-15828	*	1/4 BOLT	2	
20	985-AS-15836	*	LOCK WASHER	2	
21	985-AS-15844	*	ADJUSTING RING	1	
22	985-AS-15852	*	ADJUSTING RING LOCK WASHER	1	
23	985-AS-15869	*	MOUNTING CLAMP	1	
24	985-AS-15877	*	3/8 BOLT	2	
25	985-AS-15885	*	LOCK WASHER	2	
26	985-AS-65895	*	O-RING (KIT)	1	
27	985-AS-65902	*	O-RING	1	
28	985-AS-03272	*	HANDLE COMP.	1	
28	985-AS-15917	**	HANDLE	1	
29	985-AS-15925	**	KNOB	1	
30	985-AS-15933	*	HEAD	1	
31	985-AS-15941	*	SPRING PIN	1	
	985-SK-01599		REPAIR KIT	1	

FIG. 106 GRADUATED HAND CONTROL VALVE FOR EMERGENCY BRAKE

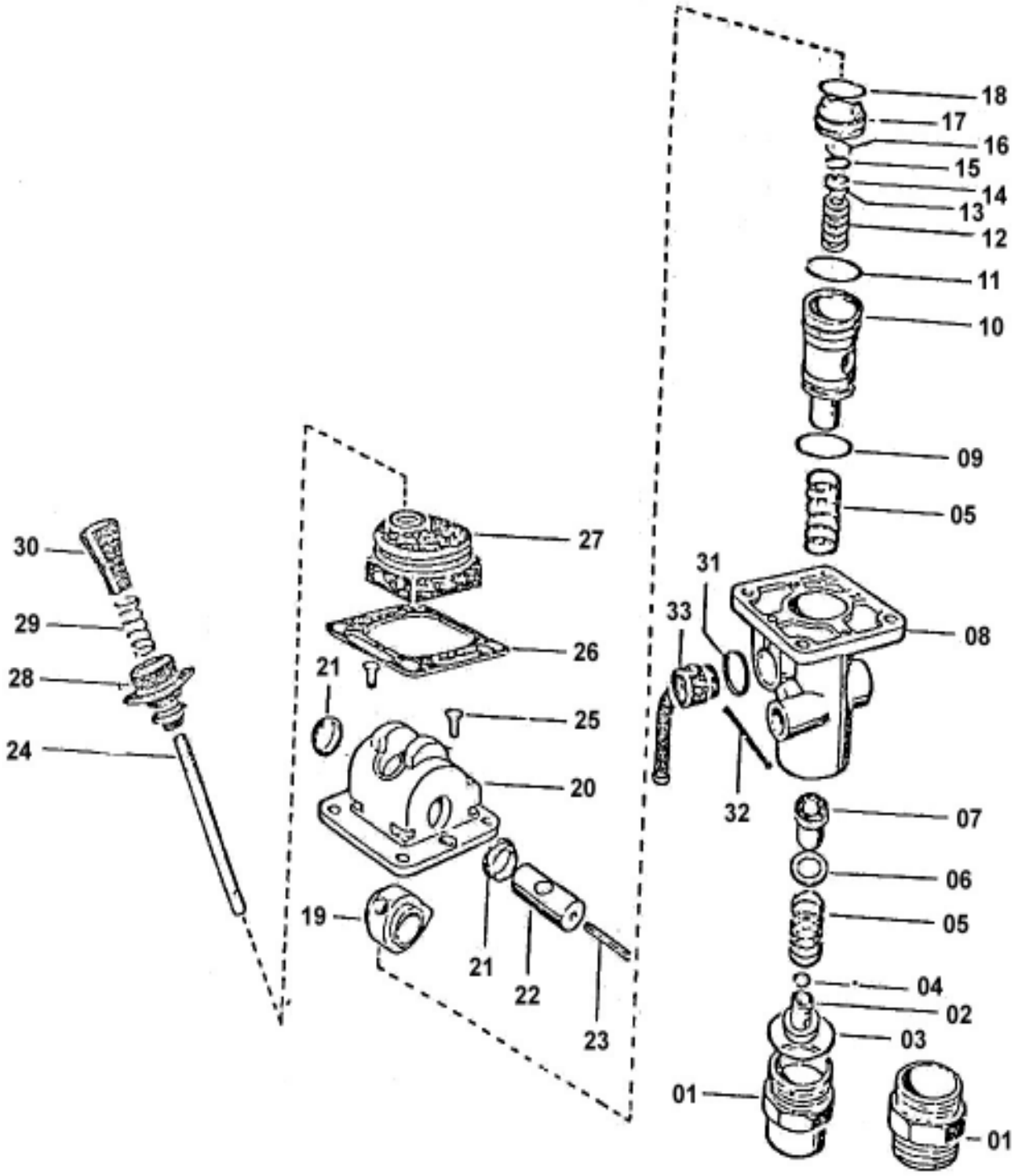

GRADUATED HAND CONTROL VALVE FOR EMERGENCY BRAKE **FIG NO. 106**

SLNO	PART NUMBER		DESCRIPTION	QTY	REMARKS
	950-AS-02188		GRADUATED HAND CONTROL VALVE	1	
01	950-AS-11195	*	INLET ADAPTOR	1	
02	950-AS-11065	*	VALVE GUIDE(KIT)	1	
03	950-AS-64201	*	O-RING (KIT)	1	
04	950-AS-63384	*	O-RING (KIT)	1	
05	950-AS-11138	*	SPRING	2	
06	950-AS-24211	*	WASHER	1	
07	950-AS-10336	*	INLET EXTN.VALVE (KIT)	1	
08	950-AS-11367	*	VALVE BODY	1	
09	950-AS-63595	*	O-RING (KIT)	1	
10	950-AS-11146	*	PLUNGER	1	
11	950-AS-63749	*	O-RING (KIT)	1	
12	950-AS-11073	*	GRADUATED SPRING	1	
13	950-AS-14232	*	SHIM, 0.5 THICK (KIT)	AR	
14	950-AS-14249	*	SHIM, 0.3 THICK (KIT)	AR	
15	950-AS-14257	*	SHIM, 0.1 THICK (KIT)	AR	
16	950-AS-14192	*	SUPPORT PLATE	1	
17	950-AS-11082	*	CAM FOLLOWER (KIT)	1	
18	950-AS-64426	*	O-RING (KIT)	1	
19	950-AS-11098	*	CAM	1	
20	950-AS-11105	*	TOP COVER	1	
21	950-AS-14184	*	BUSH (KIT)	2	
22	950-AS-10888	*	PIVOT	1	
23	950-AS-14079	*	TENSION PIN	1	
24	950-AS-10911	*	LEVER	1	
25	950-AS-14005	*	COUNTER SUNK SCREW	2	
26	950-AS-21466	*	DIAL	1	
27	950-AS-61156	*	GAITER	1	
28	950-AS-10903	*	SLEEVE	1	
29	950-AS-11162	*	SPRING	1	
30	950-AS-10896	*	KNOB	1	
31	950-AS-14087	*	SEALING RING (KIT)	1	
32	950-AS-13544	*	SPLIT PIN (KIT)	1	
33	950-AS-10936	*	EXHAUST BANJO	1	
	950-SK-00068		REPAIR KIT	1	

FIG. 107 HAND CONTROL VALVE

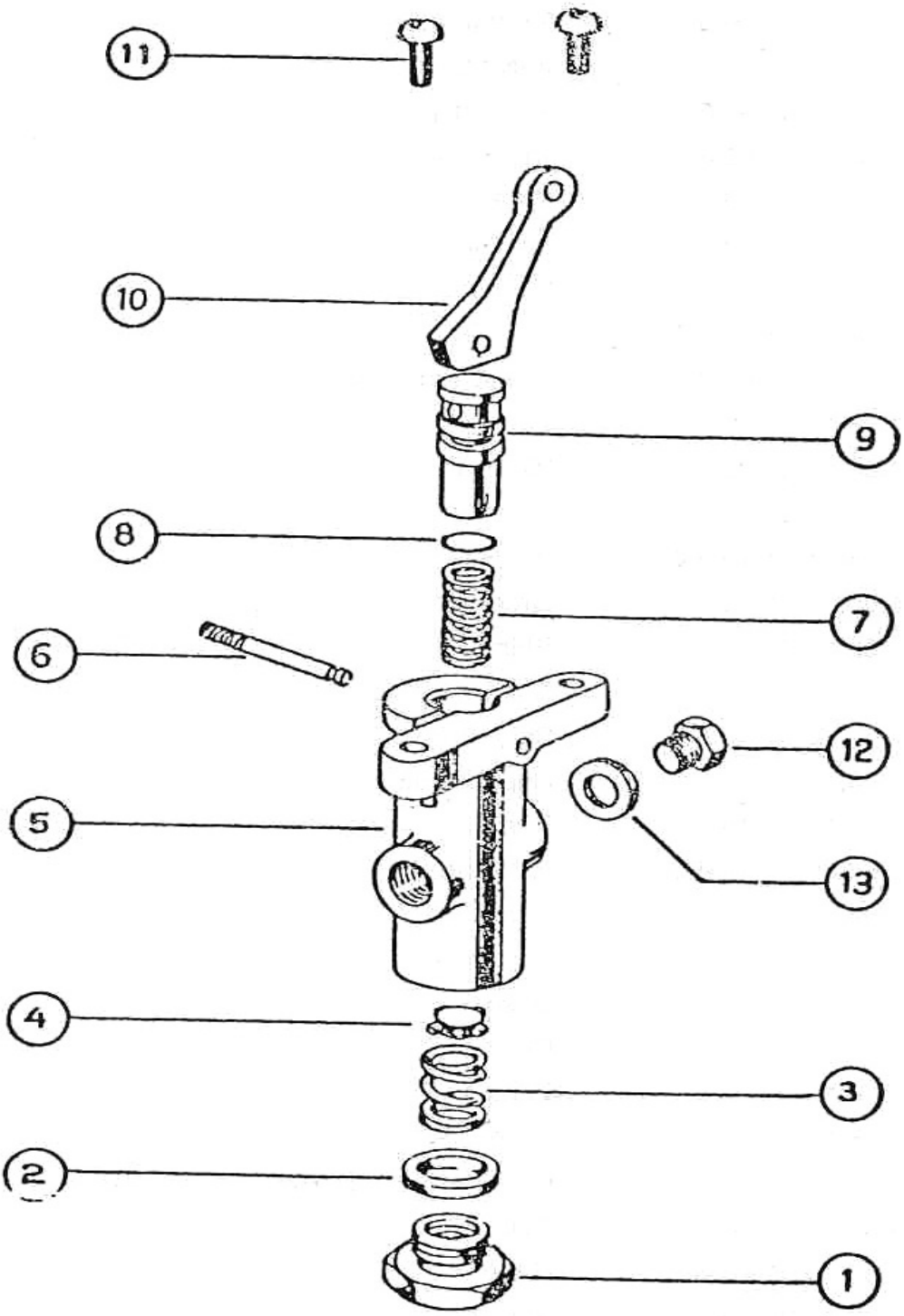

SLNO	PART NUMBER		DESCRIPTION	QTY	REMARKS
	950-AS-02536		LEVER TYPE CONTROL VALVE		
01	950-AS-12493	*	CAP NUT	2	
02	950-AS-13577	*	SEALING RING (KIT)	1	
03	950-AS-12491	*	VALVE SPRING (KIT)	1	
04	950-AS-10271	*	VALVE (KIT)	1	
05	950-AS-12467	*	BODY	1	
06	950-AS-12475	*	SPRING (KIT)	1	
07	950-AS-63562	*	O-RING (KIT)	1	
08	950-AS-12604	*	PIN	1	
09	950-AS-12459	*	PIN (KIT)	1	
10	950-AS-12597	*	LEVER ARM (HORN)	1	
11	950-AS-13252	*	SCREW (KIT)	2	
12	950-AS-23248	*	WASHER	1	
13	950-AS-13585	*	PLUG	1	
	950-SK-00198		REPAIR KIT	1	

FIG. 108 FRONT BRAKE CHAMBER

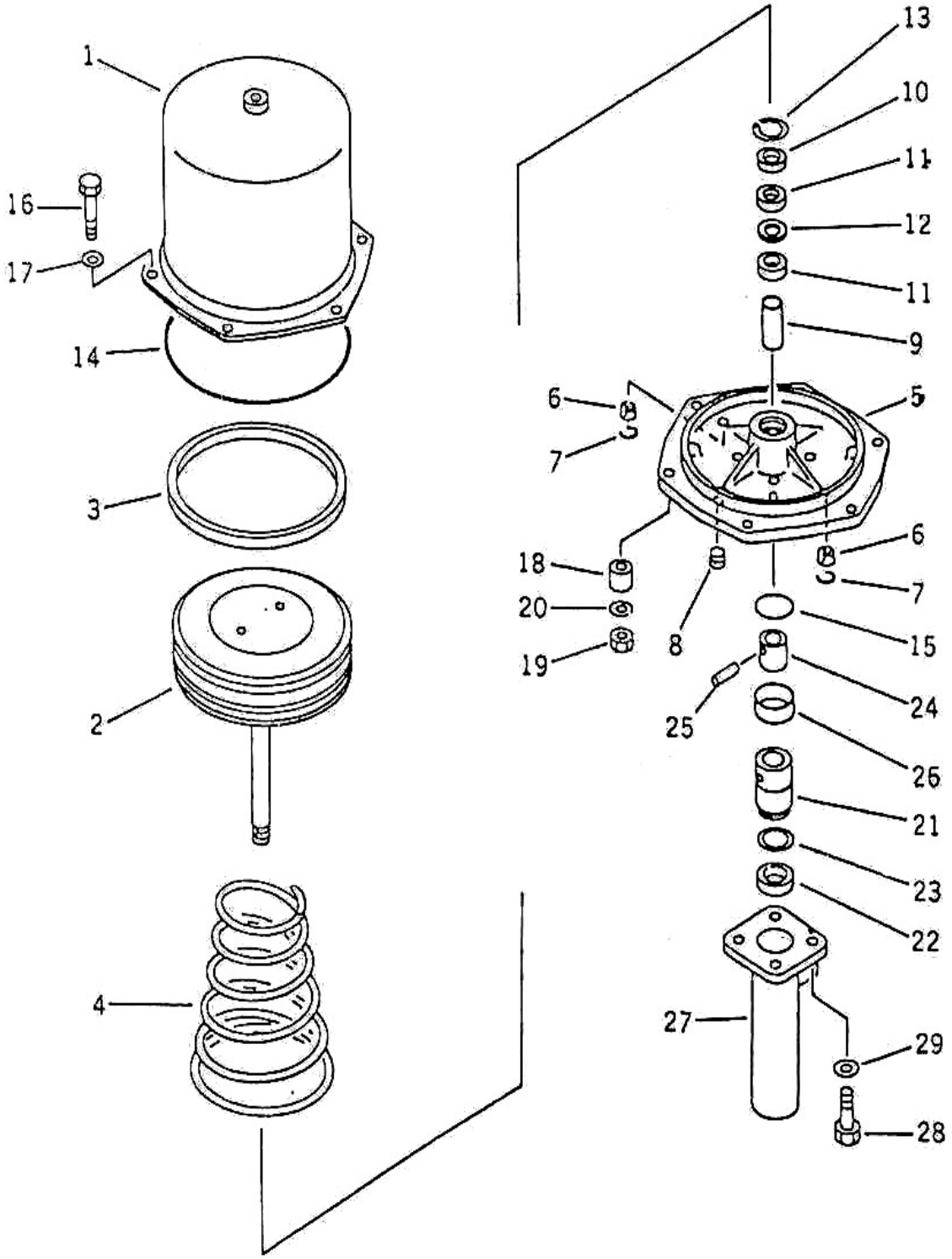

SLNO	PART NUMBER		DESCRIPTION	QTY	REMARKS
	985-AS-02608		BRAKE CHAMBER ASSY (FRONT)	2	
01	985-AS-03167	*	CYLINDER ASSY	1	
02	985-AS-03175	*	ROD ASSY	1	
03	985-AS-65262	*	PACKING (KIT)	1	
04	985-AS-15277	*	SPRING	1	
05	985-AS-15285	*	COVER	1	
06	985-AS-15293	*	FILTER(KIT)	2	
07	985-AS-65302	*	O-RING	2	
08	985-AS-15317	*	PLUG	1	
09	985-AS-15325	*	BUSHING (KIT)	1	
10	985-AS-15333	*	SUPPORTER	1	
11	985-AS-15341	*	CUP (KIT)	1	
12	985-AS-15358	*	SPACER	1	
13	985-AS-15366	*	RING	1	
14	985-AS-65376	*	O-RING (KIT)	1	
15	985-AS-65384	*	O-RING (KIT)	1	
16	985-AS-15399	*	BOLT	6	
17	985-AS-15406	*	WASHER	6	
18	985-AS-15414	*	COLLAR	6	
19	985-AS-15422	*	NUT	6	
20	985-AS-15439	*	WASHER	6	
21	985-AS-03183	*	PISTON ASSY (KIT)	1	
22	985-AS-15447	*	CUP (KIT)	1	
23	985-AS-15455	*	RING BACK-UP (KIT)	1	
24	985-AS-15463	*	GUIDE	1	
25	985-AS-15471	*	PIN	1	
26	985-AS-15488	*	RING	1	
27	985-AS-03191	*	CYLINDER ASSY	1	
28	985-AS-15496	*	BOLT	4	
29	985-AS-15503	*	WASHER	4	
	985-SK-01574		REPAIR KIT	1	

FIG. 109 REAR BRAKE CHAMBER

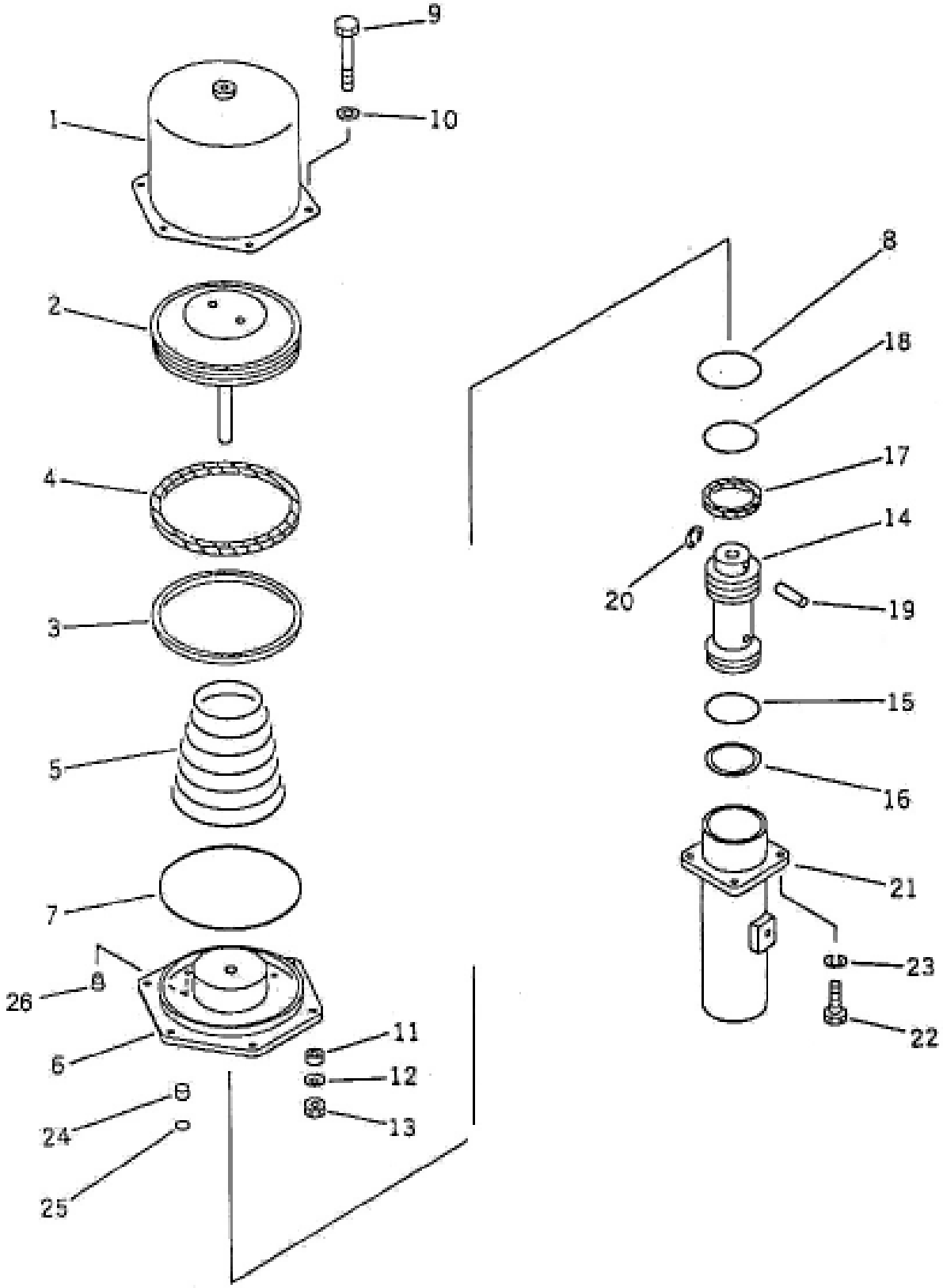

SLNO	PART NUMBER		DESCRIPTION	QTY	REMARKS
	985-AS-02616		BRAKE CHAMBER ASSY(REAR)	4	
01	985-AS-03167	*	CYLINDER	1	
02	985-AS-03207	*	ROD PISTON	1	
03	985-AS-15511	*	SLEEVE (KIT)	1	
04	985-AS-65262	*	PACKING (KIT)	1	
05	985-AS-15277	*	SPRING	1	
06	985-AS-15528	*	COVER	1	
07	985-AS-65538	*	0-RING (KIT)	1	
08	985-AS-65546	*	0-RING (KIT)	1	
09	985-AS-15399	*	BOLT	6	
10	985-AS-15406	*	WASHER	6	
11	985-AS-15414	*	COLLAR	6	
12	985-AS-15422	*	WASHER	6	
13	985-AS-15439	*	NUT	1	
14	985-AS-03215	*	PISTON CAP ASSY	6	
14	985-AS-03223	**	PISTON ASSY	1	
15	985-AS-65554	**	O-RING (KIT)	1	
16	985-AS-15569	**	SEAL (KIT)	1	
17	985-AS-65579	**	SEAL (KIT)	1	
18	985-AS-65587	**	O-RING (KIT)	1	
19	985-AS-15593	*	PIN	1	
20	985-AS-15609	*	RING	1	
21	985-AS-03231	*	CYLINDER	1	
22	985-AS-15496	*	BOLT	4	
23	985-AS-15503	*	WASHER, SPRING	4	
24	985-AS-15617	*	FILTER(KIT)	2	
25	985-AS-65627	*	O-RING	2	
26	985-AS-15633	*	PLUG	1	
	985-SK-01582		REPAIR KIT	1	

FIG. 110 SLACK ADJUSTER

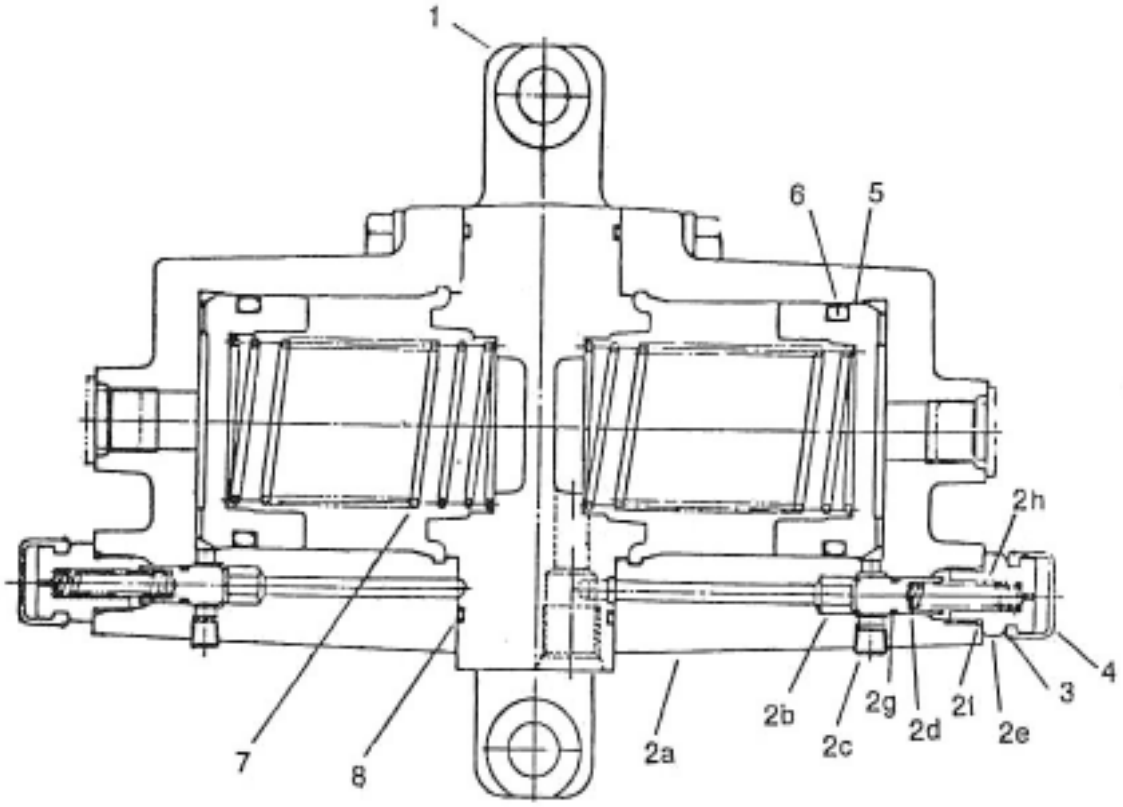

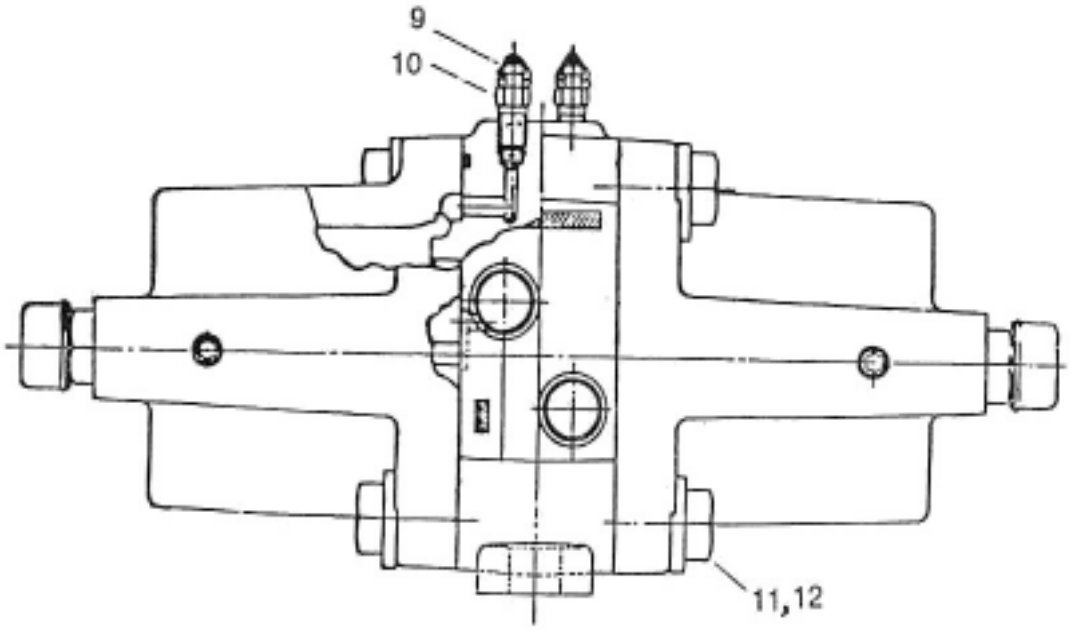

SLNO	PART NUMBER		DESCRIPTION	QTY	REMARKS
	985-AS-02721		SLACK ADJUSTER		
01	985-AS-36589		BODY	1	
			CYLINDER ASSY.	2	
02	985-AS-36597		CYLINDER	2	
03	985-AS-16605		SEAT	2	
04	CPL02-10810		PLUG	2	
05	985-AS-16613		VALVE	2	
06	985-AS-16621		CAP	2	
07	CHS03-02034	*	O-RING	2	
08	985-AS-16646	*	SPRING	2	
09	985-AS-66761	*	O-RING	2	
10	985-AS-16662	*	O-RING	2	
11	985-AS-16669	*	SPRING	2	
12	985-AS-03297	*	SEAL ASSY	2	
13	985-AS-66786	*	COVER	2	
14	985-AS-16695	*	RING	2	
15	985-AS-16702	*	VALVE	2	
16	985-AS-66794	*	O-RING	2	
17	985-AS-66801	*	CAP	2	
18	CFB07-21440	*	HEX. BOLT	8	
19	CFW05-14045	*	WASHER	8	
	985-SK-01436		REPAIR KIT		

FIG. 111 DOUBLE CHECK VALVE

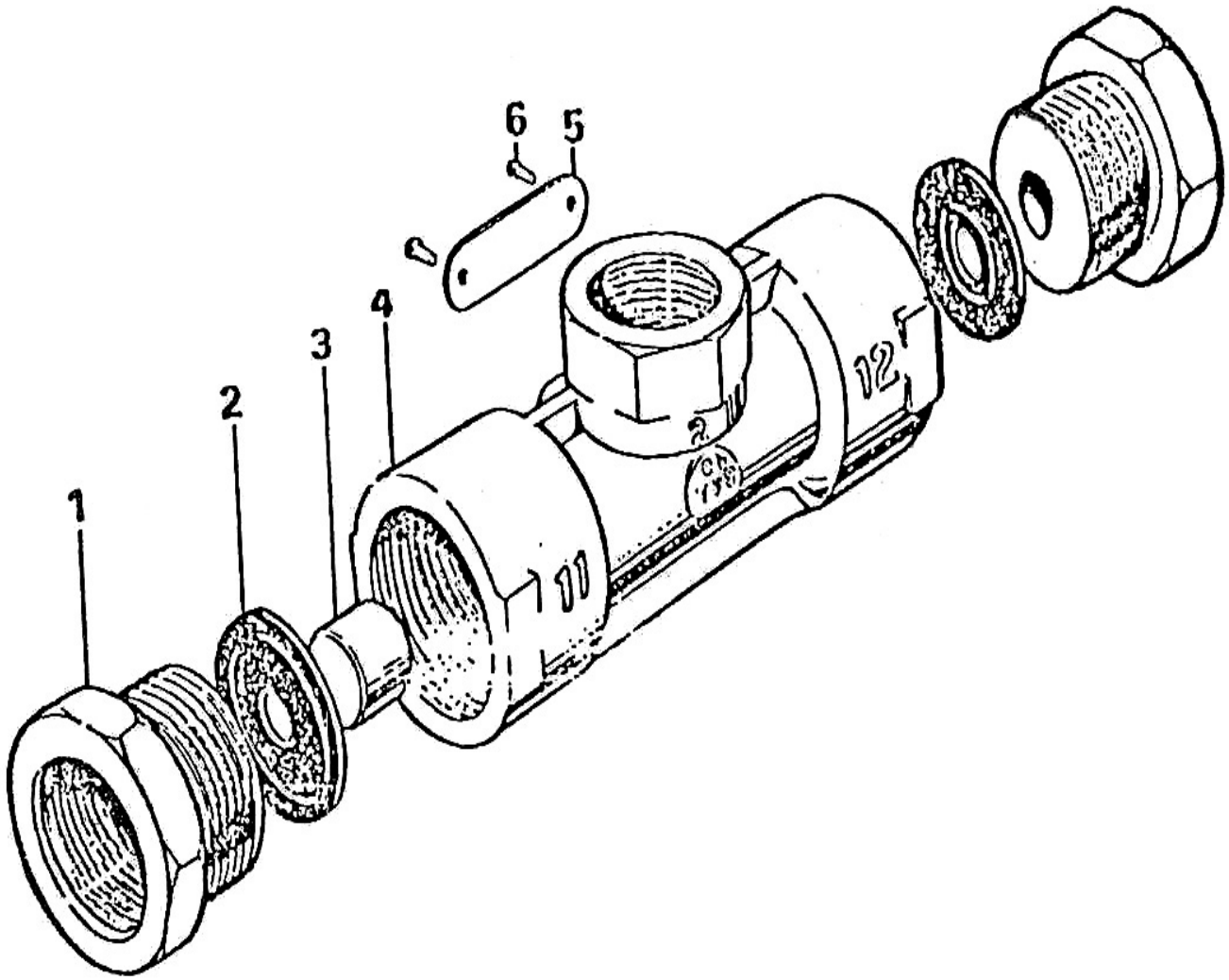

SLNO	PART NUMBER	DESCRIPTION	QTY	REMARKS
	950-AS-02236	DOUBLE CHECK VALVE		
01	950-AS-11454	INLET ADAPTOR	2	
02	950-AS-11446	SEAL	2	
03	950-AS-11438	VALVE	1	
04	950-AS-11421	VALVE BODY	1	
05	950-AS-12345	NAME PLATE	1	
06	950-AS-13147	HAMER HEAD SCREW	2	

FIG. 112 LIMITING & QUICK RELEASE VALVE

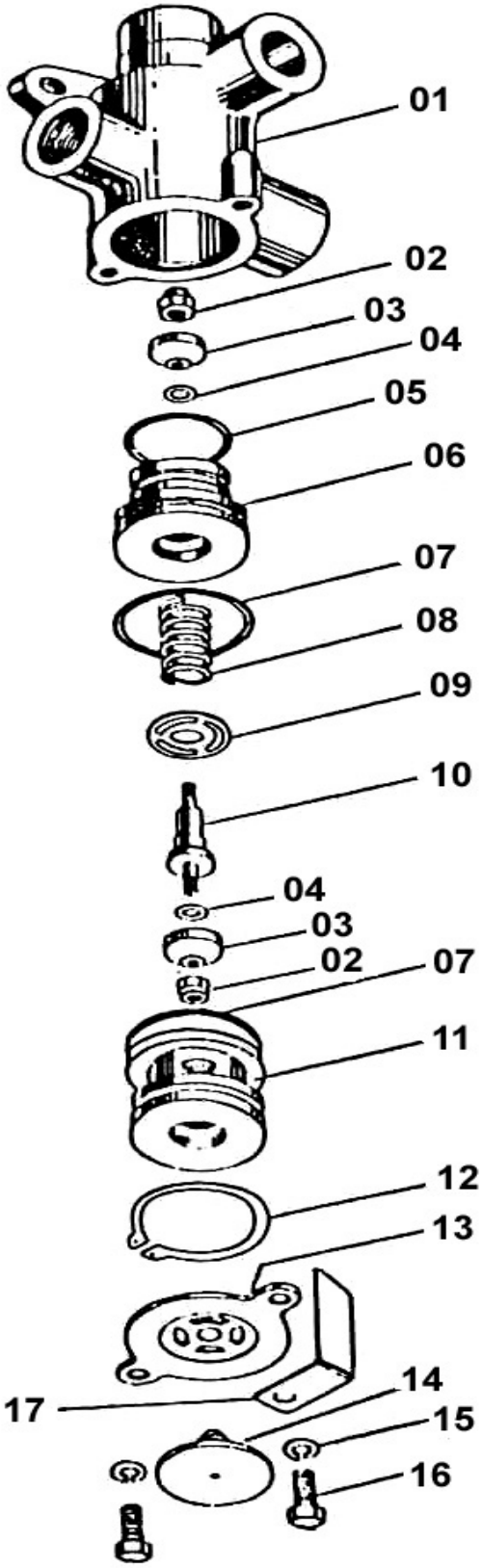

SLNO	PART NUMBER		DESCRIPTION	QTY	REMARKS
	950-AS-02099		LIMITING & QUICK RELEASE VALVE		
01	950-AS-10733	*	VALVE BODY	1	
02	950-AS-13066	*	NYLOC NUT (KIT)	2	
03	950-AS-10303	**	VALVE (KIT)	2	
04	950-AS-73055	**	FABRIC WASHER (KIT)	2	
05	950-AS-63595	**	O-RING (KIT)	1	
06	950-AS-10717	*	PLUNGER (KIT)	1	
07	950-AS-63602	**	O-RING (KIT)	2	
08	950-AS-10158	*	SPRING (KIT)	1	
09	950-AS-11779	*	VALVE GUIDE (KIT)	1	
10	950-AS-10806	*	VALVE STEM (KIT)	1	
11	950-AS-11113	*	PISTON	1	
12	950-AS-13041	*	CIRCLIP	1	
13	950-AS-10709	*	BASE COVER	1	
14	950-AS-10458	*	EXHAUST CHECK (KIT)	1	
15	950-AS-13074	*	SPRING WASHER	2	
16	950-AS-13252	*	SCREW	2	
17	950-AS-13099	*	INDENTIFICATION TAG	1	
	950-SK-00108		MAJOR REPAIR KIT		
	950-SK-00035	**	MINOR REPAIR KIT		

FIG. 113 SHUT OFF COCK

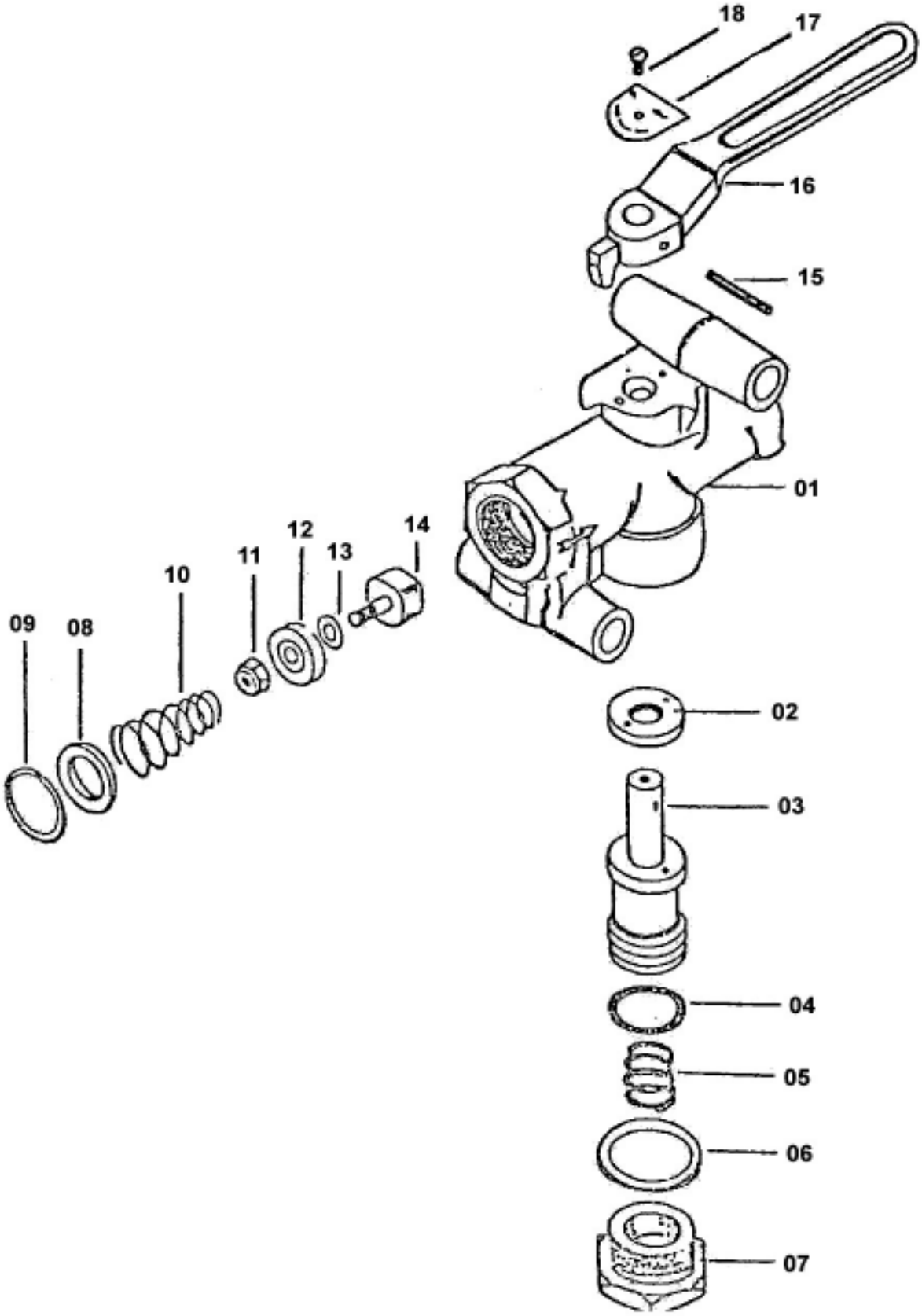

SLNO	PART NUMBER		DESCRIPTION	QTY	REMARKS
	950-AS-02552		SHUT OFF COCK		
01	950-AS-05266	*	BODY AND PIN ASSY.	1	
02	950-AS-13933	*	SEALING WASHER (KIT)	1	
03	950-AS-12629	*	PLUNGER	1	
04	950-AS-63027	*	O-RING	1	
05	950-AS-12442	*	SPRING	1	
06	950-AS-13106	*	WASHER (KIT)	1	
07	950-AS-13925	*	PLUG	1	
08	950-AS-13893	*	CIRCLIP	1	
09	950-AS-12661	*	SPRING RETAINER	1	
10	950-AS-10466	*	SPRING	1	
11	950-AS-13066	*	NYLOCK NUT	1	
12	950-AS-10303	*	VALVE (KIT)	1	
13	950-AS-73055	*	FABRIC WASHER (KIT)	1	
14	950-AS-12637	*	VALVE STEM	1	
15	950-AS-13293	*	TENSION PIN (KIT)	1	
16	950-AS-12645	*	HANDLE	1	
17	950-AS-24763	*	NAME PLATE	1	
18	950-AS-13974	*	SCREW	1	
	950-SK-00205		REPAIR KIT	1	

FIG. 114 RE6 RELAY EMERGENCY VALVE

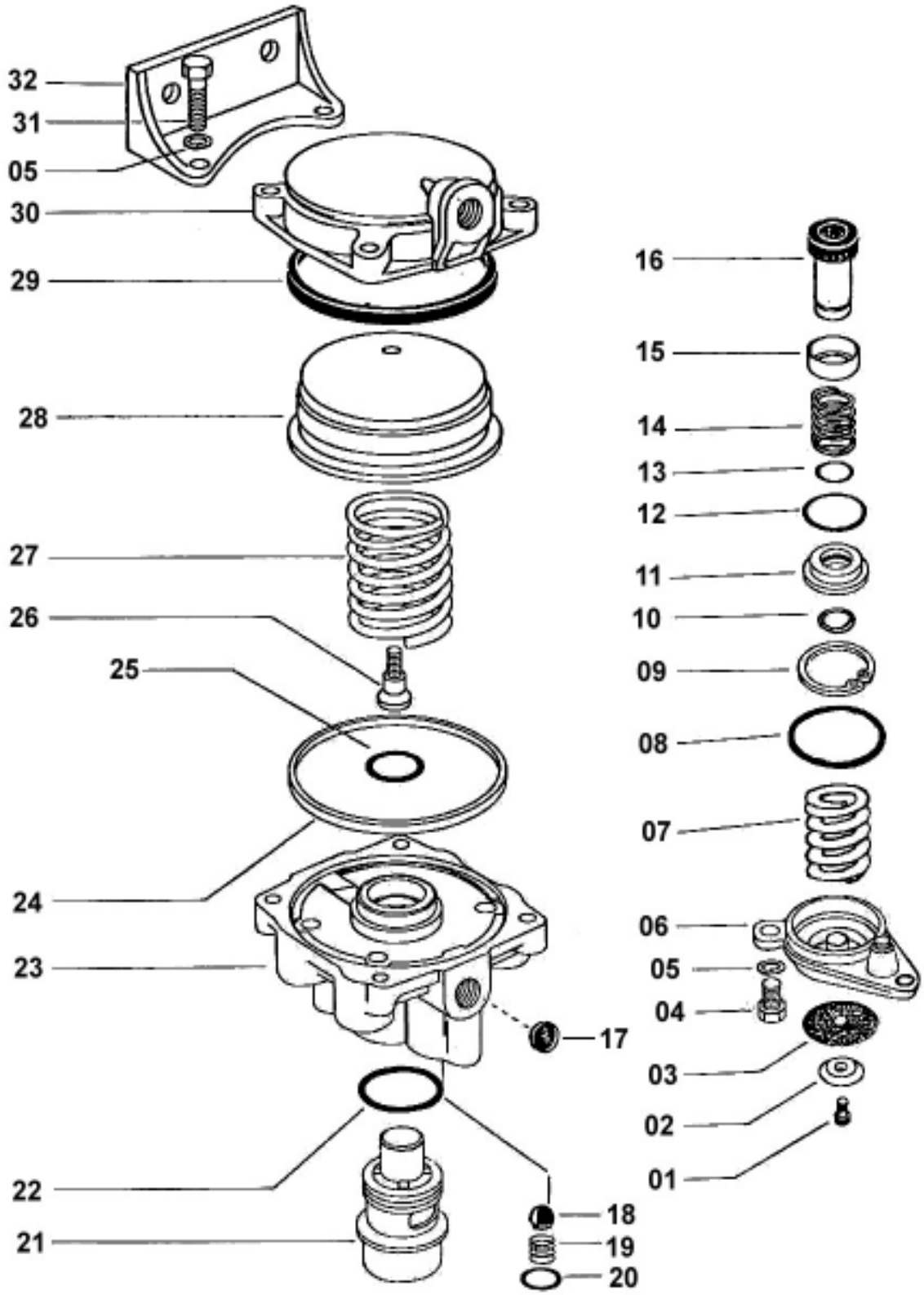

SLNO	PART NUMBER		DESCRIPTION	QTY	REMARKS
	950-AS-02333		RELAY EMERGENCY VALVE R6		
01	950-AS-13366	*	SELF TAPPING SCREW	1	
02	950-AS-11762	*	EXHAUST COVER	1	
03	950-AS-11754	*	DIAPHRAGM (KIT)	1	
04	950-AS-13163	*	SCREW	3	
05	950-AS-13122	*	SPRING, WASHER	7	
06	950-AS-11746	*	BASE COVER	1	
07	950-AS-11738	*	SPRING (KIT)	1	
08	950-AS-14524	*	SEALING RING (KIT)	1	
09	950-AS-14516	*	INTERNAL CIRCLIP	1	
10	950-AS-11721	*	SNAP RING	1	
11	950-AS-11713	*	VALVE GUIDE	1	
12	950-AS-14492	*	SEALING RING (KIT)	1	
13	950-AS-14508	*	SEALING RING (KIT)	1	
14	950-AS-11705	*	SPRING (KIT)	1	
15	950-AS-11698	*	VALVE RETAINER (KIT)	1	
16	950-AS-10393	*	VALVE (KIT)	1	
17	950-AS-11876	*	FILTER (KIT)	1	
18	950-AS-10985	*	CHECK VALVE (KIT)	1	
19	950-AS-10993	*	CHECK VALVE SPRING (KIT)	1	
20	950-AS-13577	*	SEALING RING (KIT)	1	
21	950-AS-11681	*	EMERGENCY PLUNGER	1	
22	950-AS-14484	*	SEALING RING (KIT)	1	
23	950-AS-11868	*	VALVE BODY	1	
24	950-AS-14468	*	SEALING RING (KIT)	1	
25	950-AS-14451	*	SEALING RING (KIT)	1	
26	950-AS-11665	*	EXHAUST VALVE SEAT (KIT)	1	
27	950-AS-11835	*	SPRING	1	
28	950-AS-11657	*	RELAY PISTON	1	
29	950-AS-14476	*	SEALING RING (KIT)	1	
30	950-AS-11673	*	TOP COVER	1	
31	950-AS-13739	*	BOLT	4	
32	950-AS-11884	*	MTG. BRACKET (KIT)		
	950-SK-00149		SEAL KIT		

FIG. 115 INVERSION VALVE

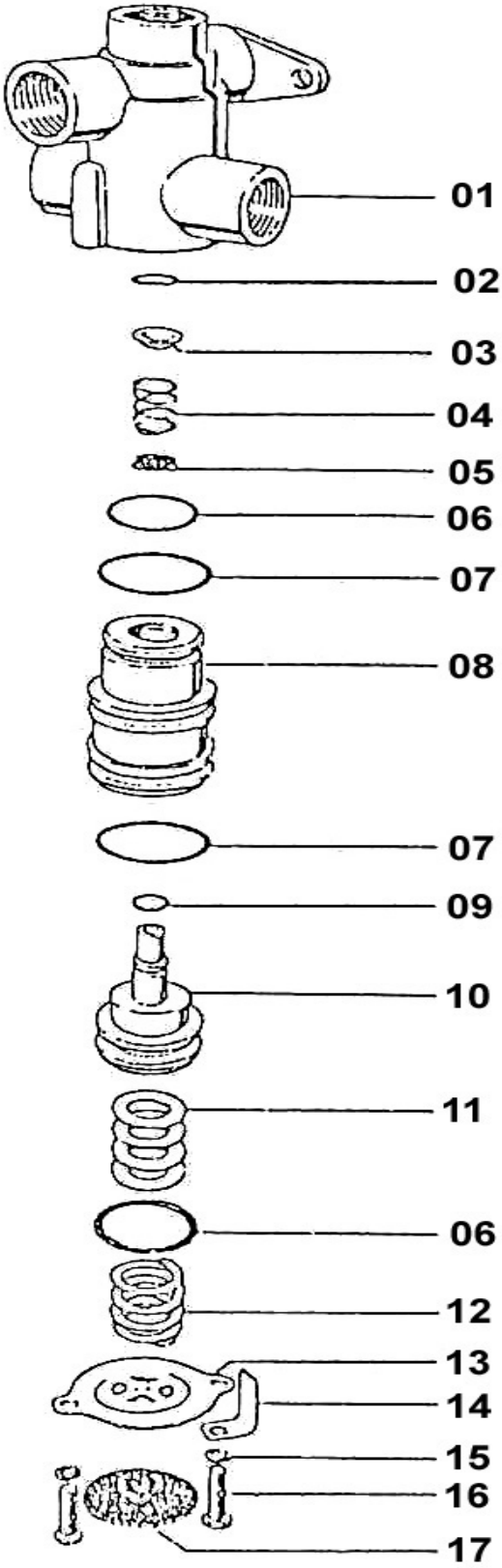

SLNO	PART NUMBER		DESCRIPTION	QTY	REMARKS
	950-AS-02106		INVERSION VALVE		
01	950-AS-10758	*	BODY	1	
02	950-AS-13658	*	CIRCLIP	1	
03	950-AS-10474	*	SPRING RETAINER	1	
04	950-AS-12491	*	SPRING	1	
05	950-AS-10271	*	VALVE (KIT)	1	
06	950-AS-63595	*	O-RING (KIT)	2	
07	950-AS-63602	*	O-RING (KIT)	2	
08	950-AS-14727	*	VALE BODY	1	
09	950-AS-63473	*	O-RING (KIT)	1	
10	950-AS-14735	*	VALVE PLUNGER	1	
11	950-AS-14046	*	SHIM	AR	
11	950-AS-14743	*	SHIM	AR	
11	950-AS-14751	*	SHIM	AR	
12	950-AS-10847	*	PLUNGER RETURN SPRING	1	
13	950-AS-10709	*	EXHAUST PLATE	1	
14	950-AS-13099	*	NAME PLATE	1	
15	950-AS-13074	*	SPRING WASHER	2	
16	950-AS-13252	*	SCREW	2	
17	950-AS-10458	*	EXHAUST CHECK (KIT)	1	
	950-SK-00051		REPAIR KIT	1	

FIG. 116 D2-GOVERNOR VALVE

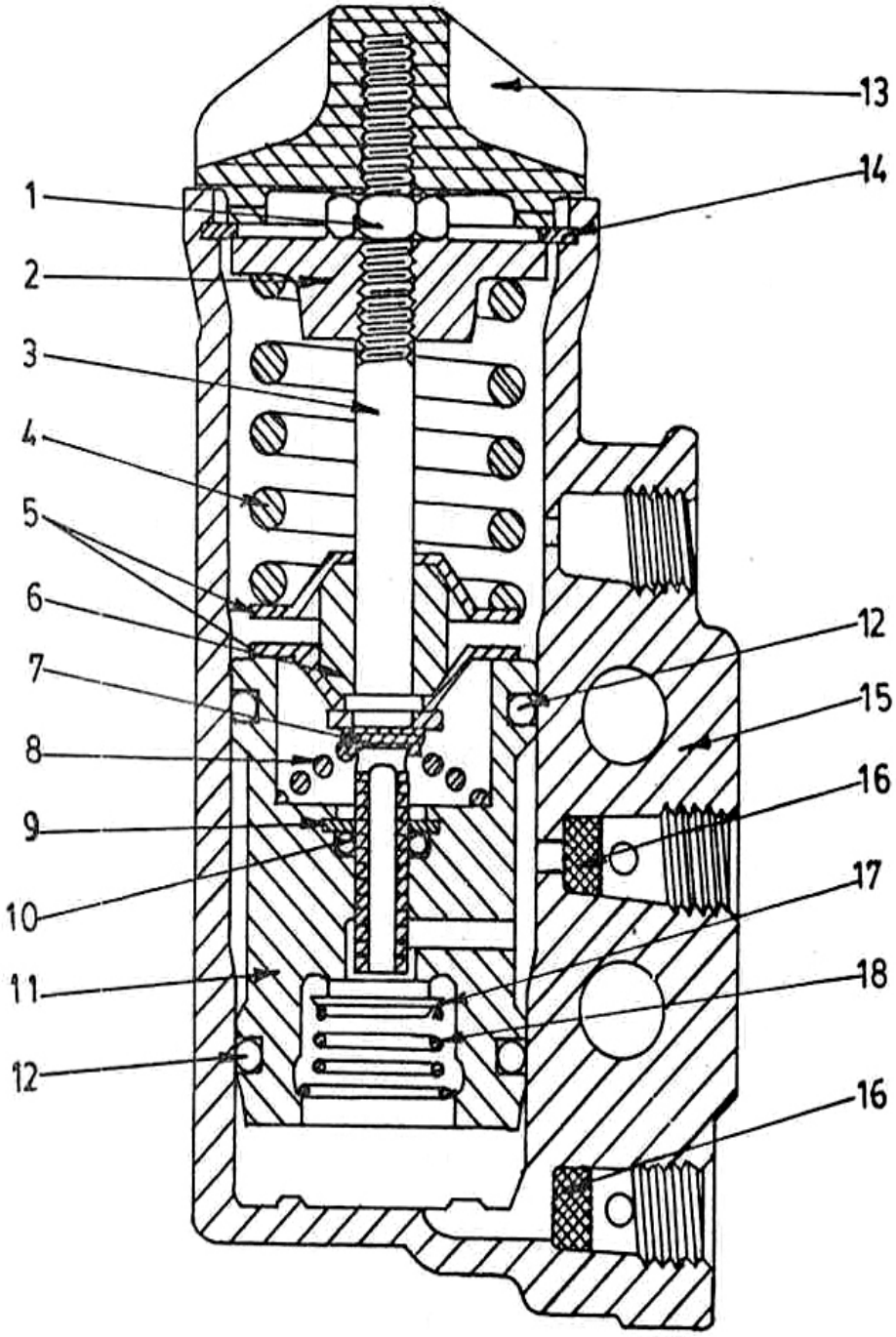

SLNO	PART NUMBER		DESCRIPTION	QTY	REMARKS
	950-AS-02277		GOVERNOR VALVE	1	
01	950-AS-14427	*	LOCK NUT	1	
02	950-AS-11495	*	UPPER SPRING SHEET	1	
03	950-AS-11543	*	ADJUSTING SCREW	1	
04	950-AS-11551	*	SPRING	1	
05	950-AS-11576	*	LOAWER SPRING SEAL	2	
06	950-AS-11568	*	SPRING GUIDE	1	
07	950-AS-11584	*	EXHAUST SYSTEM	1	
08	950-AS-11592	*	EXHAUST SYSTEM SPRING(KIT)	1	
09	950-AS-14435	*	WASHER(KIT)	1	
10	950-AS-64656	*	SEALING RING (KIT)	1	
11	950-AS-11519	*	PLUNGER	1	
12	950-AS-64648	*	SEALING RING (KIT)	2	
13	950-AS-11502	*	COVER (KIT)	1	
14	950-AS-14319	*	CIRCLIP (KIT)	1	
15	950-AS-11487	*	BODY	1	
16	950-AS-11535	*	FILTER (KIT)	2	
17	950-AS-10377	*	INLET/EXHAUST VALVE (KIT)	1	
18	950-AS-11527	*	VALVE SPRING	1	
19	950-AS-94809	*	GREASE SACHET (KIT)	1	
	950-SK-00254		REPAIR KIT	1	

FIG. 117 AIR DRYER

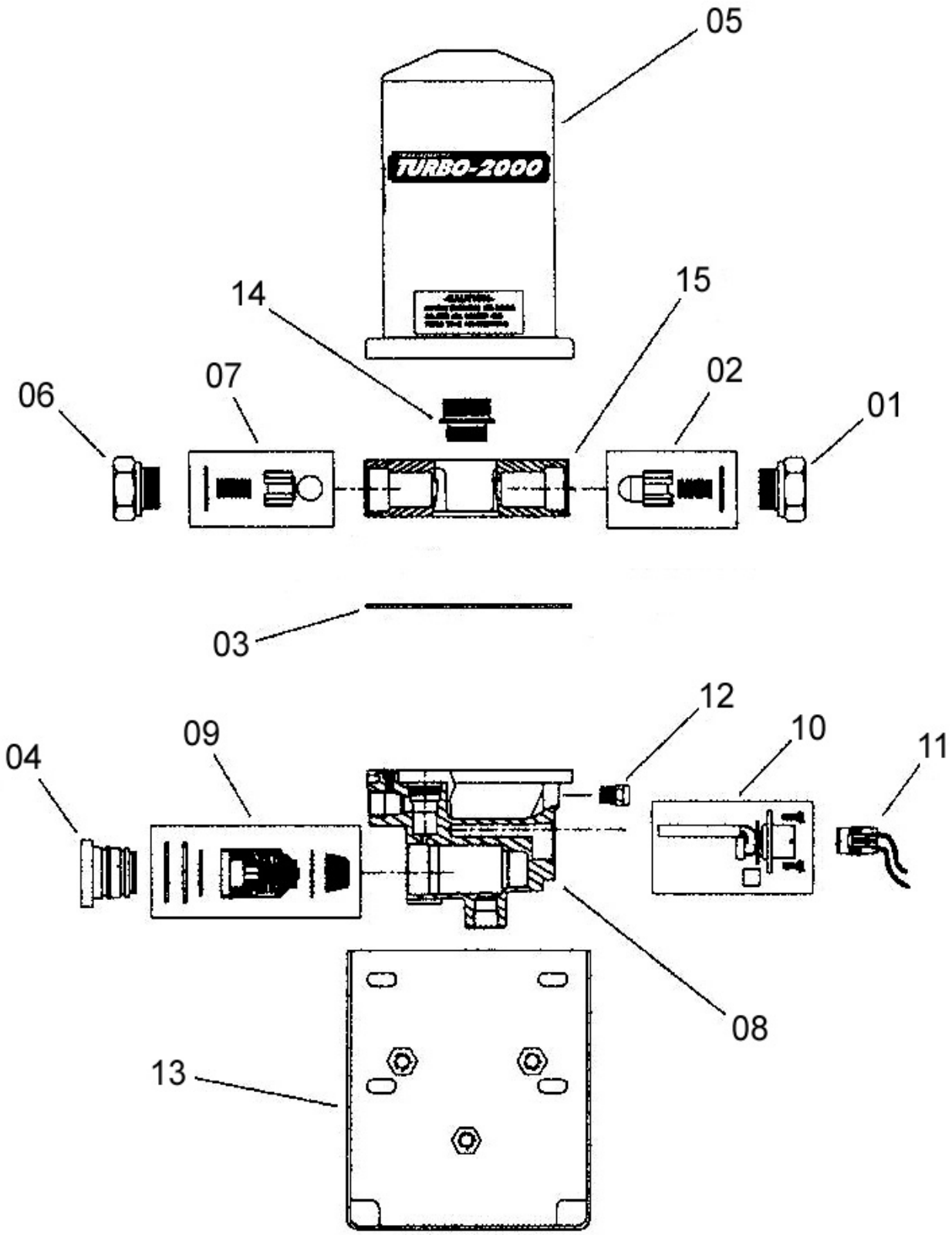

SLNO	PART NUMBER	DESCRIPTION	QTY	REMARKS
	953-AS-02174	AIR DRIER		
01	953-AS-12097	REGENARATION VALVE NUT	1	
02	953-AS-03008	REGENARATION VALVE KIT	1	
03	953-AS-62106	BODY GASKET	1	
04	953-AS-12112	SEAL RETAINER	1	
05	953-AS-03065	DESICCANT CARTRIDGE	1	
06	953-AS-12129	CHECK VALVE NUT	1	
07	953-AS-03073	CHECK VALAVE KIT	1	
08	953-AS-03081	BOTTOM CAP ASSY 24V STD	1	
09	953-AS-03024	PURGE VALVE KIT	1	
10	953-AS-03032	HEATER KIT	1	
11	953-EG-02732	WIRE HARNESS	1	
12	953-AS-12137	SAFETY VALVE(175psi)	1	
13	953-AS-03057	MOUNTING BRACKET	1	
14	953-AS-12145	CARTRIDGE STUD	1	
15	953-AS-12153	MID-SECTION WITH VALVE	1	
	953-SK-00079	SERVICE KIT		

FIG. 118 ABS / ASR SYSTEM CIRCUIT DIAGRAM

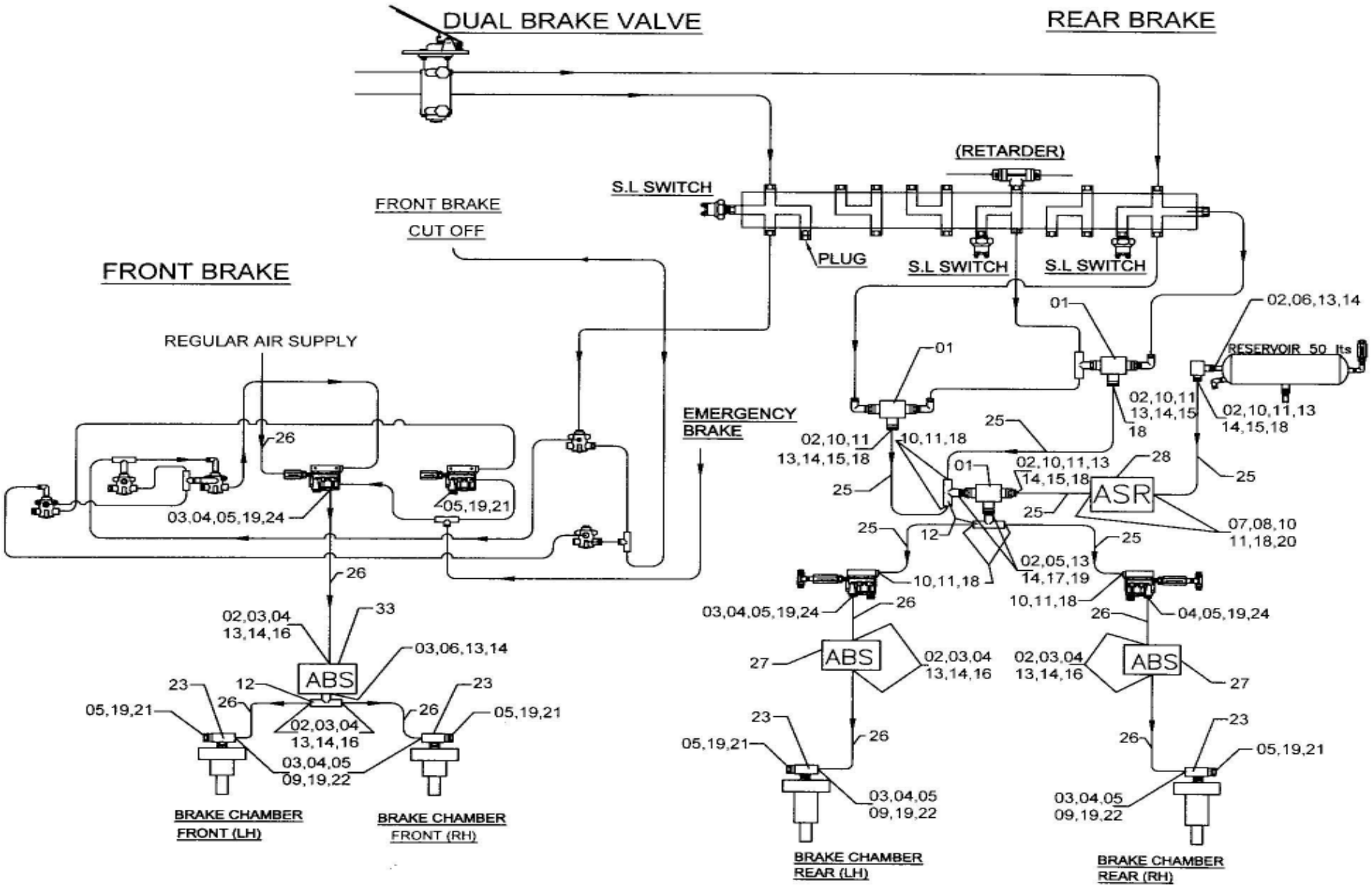

SLNO	PART NUMBER	DESCRIPTION	QTY	REMARKS
01	950-AS-02236	DOUBLE CHECK VALVE	3	
02	950-AS-13617	LOCK NUT M22X1.5	11	
03	950-AS-23407	SLEEVE 5/8"	10	
04	950-AS-13796	UNION NUT 5/8"	10	
05	950-AS-15586	SP.WASHER M16	12	
06	950-AS-13666	DOUBLE SOCKET	2	
07	950-AS-15594	SPL. WASHER M14	1	
08	950-AS-62339	SEAL RING M14	1	
09	950-AS-13463	LOCK NUT M16X1.5	3	
10	950-AS-23289	SLEEVE 3/8"	8	
11	950-AS-13277	UNION NUT 3/8"	8	
12	950-AS-13414	TEE	3	
13	950-AS-15601	SPL WASHER M22	12	
14	950-AS-65522	SEALING RING	13	
15	950-AS-23694	ELBOW	4	
16	950-AS-23844	ELBOW	4	
17	950-AS-13803	DOUBLE SOCKET	1	
18	950-AS-24609	INSERT 3/8"	8	
19	950-AS-65628	SEAL RING M16	12	
20	950-AS-13641	UNION BODY	1	
21	950-AS-14054	PLUG M16X1.5	5	
22	950-AS-24163	ELBOW	3	
23	985-AS-12077	BLOCK	4	
24	950-AS-14143	UNION BODY	3	
25	880001000015	NYLON TUBE 3/8"	10mts	
26	880001000016	NYLON TUBE 5/8"	9mts	
27		ABS MODULATOR	3	
28		ASR MODULATOR	1	
29	CPW03-10022	ROUNR PAD M10	6	
30	CFS01-21016	HEX SCREW M10	6	
31	CFW01-11036	SPR. WASHER	6	
32	CCC05-22110	CLAMP	6	

V
STEERING CONTROL SYSTEM

FIG. 125 STG. COLUMN, WHEEL, DRIVE ASSY. & BRACKET INST.

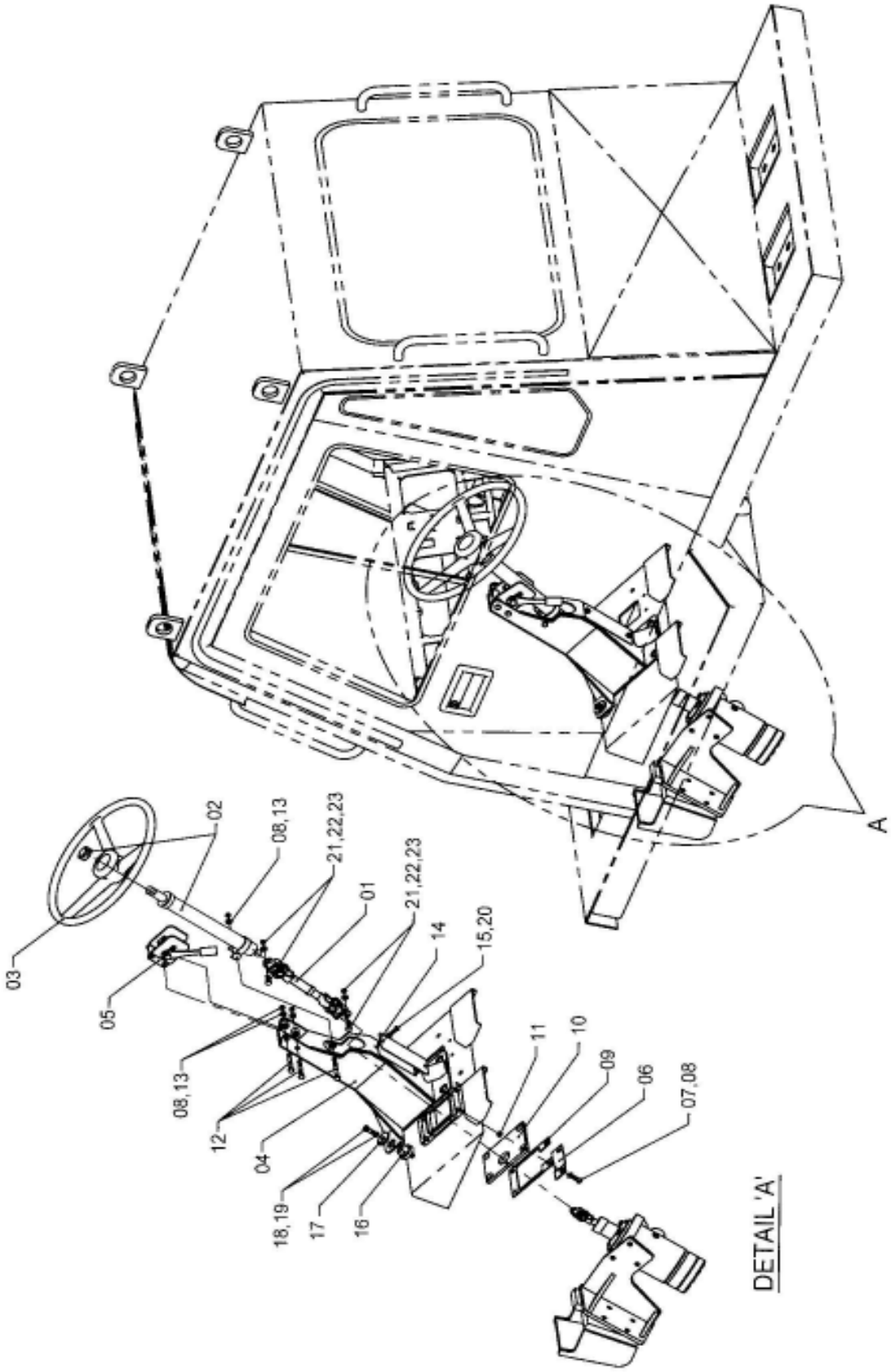

STG. COLUMN, WHEEL, DRIVE ASSY. & BRACKET INST. **FIG NO. 125**

SLNO	PART NUMBER	DESCRIPTION	QTY	REMARKS
01	935-SS-02038	STEERING DRIVE ASSY	1	
02	778-SS-02045	STG. COLUMN ASSY	1	
03	565400001840	STG. WHEEL	1	
04	985-SS-02098	BRACKET	1	
05	778-SS-02061	STG. BRACKET ASSY	1	
06	985-HP-11158	PLATE	1	
07	CFB01-11030	HEX. BOLT	4	
08	CFW05-10032	WASHER	7	
09	985-HP-11141	PLATE	1	
10	985-HP-61168	INSULATOR	1	
11	985-HP-11303	SPACER	4	
12	CFB02-21015	HEX. BOLT	3	
13	CFN24-21011	HEX. NUT	3	
14	985-SS-11348	COVER	1	
15	CFW01-10825	WASHER, SPRING	2	
16	778-SS-10518	CUSHION	4	
17	985-SS-13146	SPACER	4	
18	CFW05-12032	WASHER	4	
19	CFB01-21260	HEX. BOLT	4	
20	CFB01-10820	HEX. BOLT	2	

FIG. 126 STEERING LINKAGE INST.

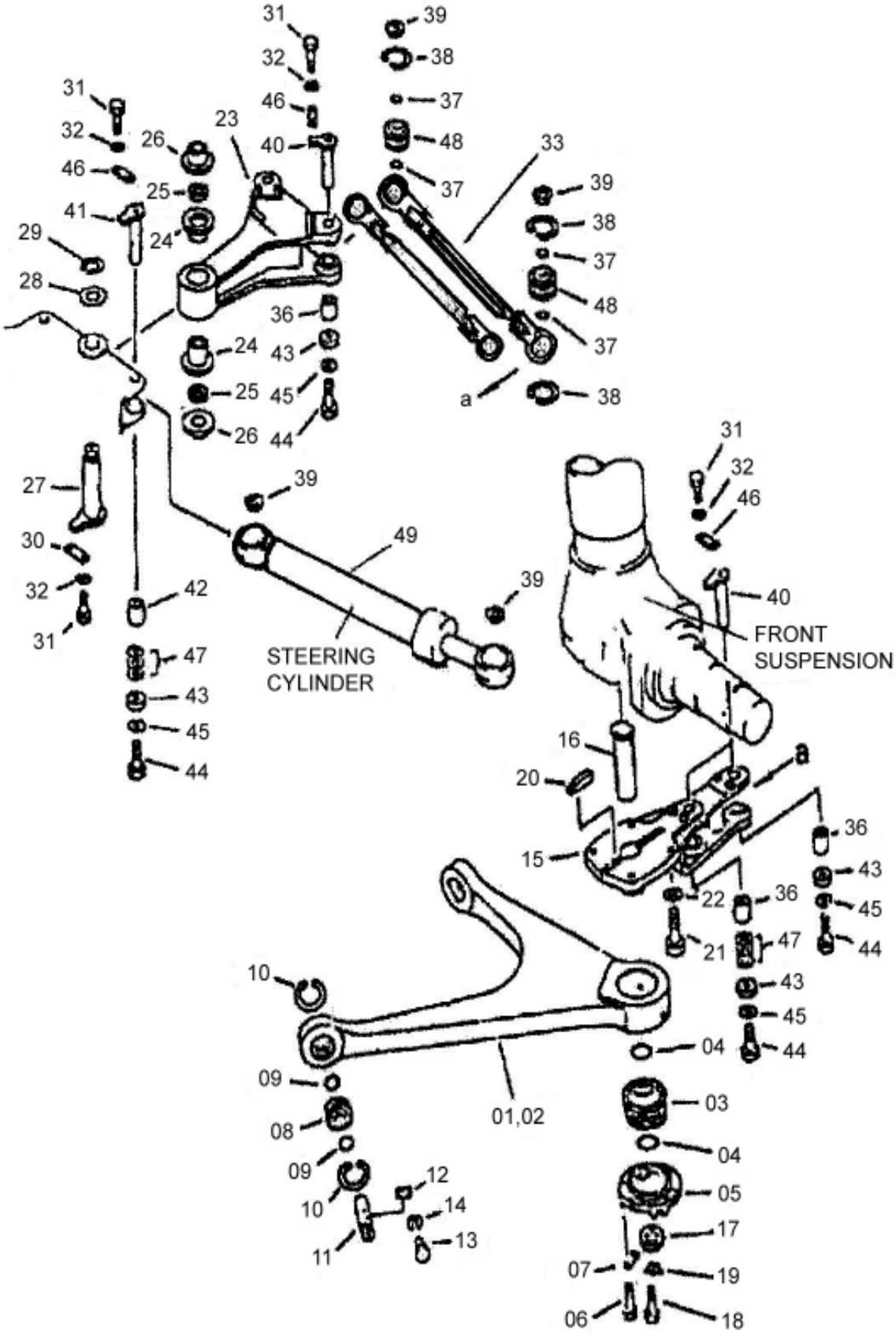

SLNO	PART NUMBER	DESCRIPTION	QTY	REMARKS
	953-SS-00019	STEERING LINKAGE ASSY		
01	953-SS-31115	A -FRAME LH	1	
02	953-SS-31123	A -FRAME RH	1	
03	953-SS-01007	BUSH	2	
04	CHS01-12110	O-RING	4	
05	953-SS-31156	COVER	2	
06	CFS01-31640	HEX. SCREW	16	
07	568-40-11310	PLATE	8	
08	953-SS-01015	BUSH	4	
09	CHS01-12075	O-RING	8	
10	CFL04-00135	SNAP RING	4	
11	953-SS-11319	PIN	4	
12	04082-00212	LOCK	4	
13	CFS01-31225	HEX. SCREW	8	
14	CFW01-11236	WASHER, SPRING	8	
15	953-SS-31131	LEVER	2	
16	953-SS-11302	PIN	2	
17	953-SS-11392	HOLDER	2	
18	CFS01-31645	HEX. SCREW	6	
19	985-SS-11104	LOCK	4	
20	953-SS-11384	KEY	4	
21	CFB07-23995	HEX. BOLT	8	
22	CFW05-39090	WASHER	8	
23	953-SS-31148	LEVER	1	
24	953-SS-11368	BUSHING	2	
25	07145-00060	DUST SEAL	2	
26	953-SS-11376	BUSHING	2	
27	953-SS-01023	PIN	1	
28	985-SS-11145	PLATE	1	
29	CFL01-15520	RING SNAP	1	
30	953-SS-11473	PLATE	8	
31	CFB07-21430	HEX. BOLT	18	
32	CFW05-14045	WASHER	18	
33	953-SS-02085	TIE ROD ASSY	2	
36	953-SS-11416	BUSHING	8	

FIG. 126 STEERING LINKAGE INST.

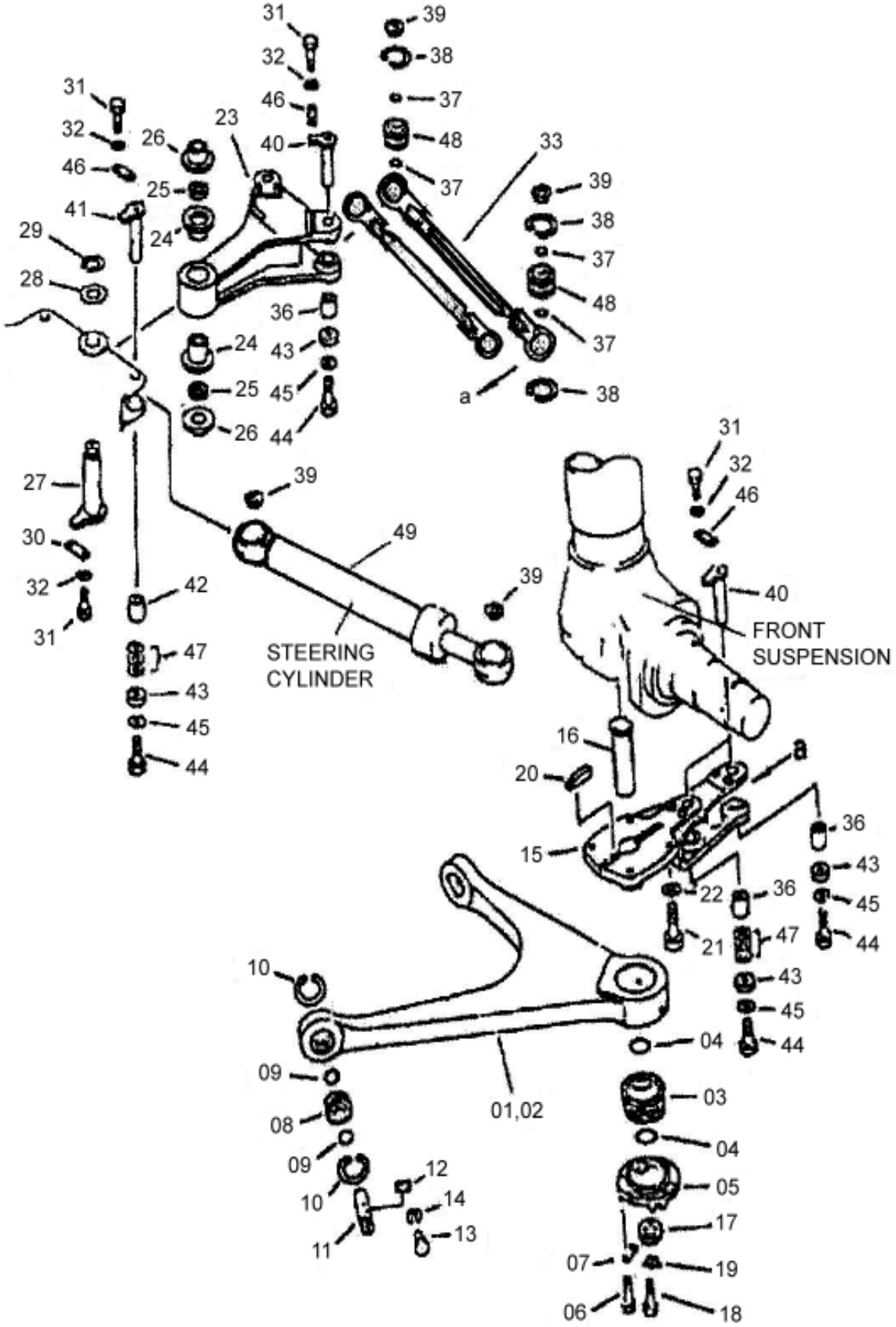

SLNO	PART NUMBER	DESCRIPTION	QTY	REMARKS
37	07000-02060	O-RING	8	
38	CFL04-10170	SNAP RING	8	
39	953-SS-11408	SPACER	8	
40	953-SS-01031	PIN	2	
41	953-SS-01089	PIN	2	
42	953-SS-11538	BUSHING	2	
43	985-SS-11186	PLATE (HOLDER)	8	
44	CFS01-32460	HEX. SCREW	8	
45	CFW05-24060	WASHER	8	
46	985-BD-11033	PLATE	9	
47	953-SS-11449	SHIM	8	
47	953-SS-11432	SHIM	8	
47	953-SS-11424	SHIM	4	
47	953-SS-11457	SHIM	12	
48	07137-06010	BUSH	4	
49	953-HC-01009	STEERING CYLINDER	2	

FIG. 127 STEERING LOCK SYSTEM

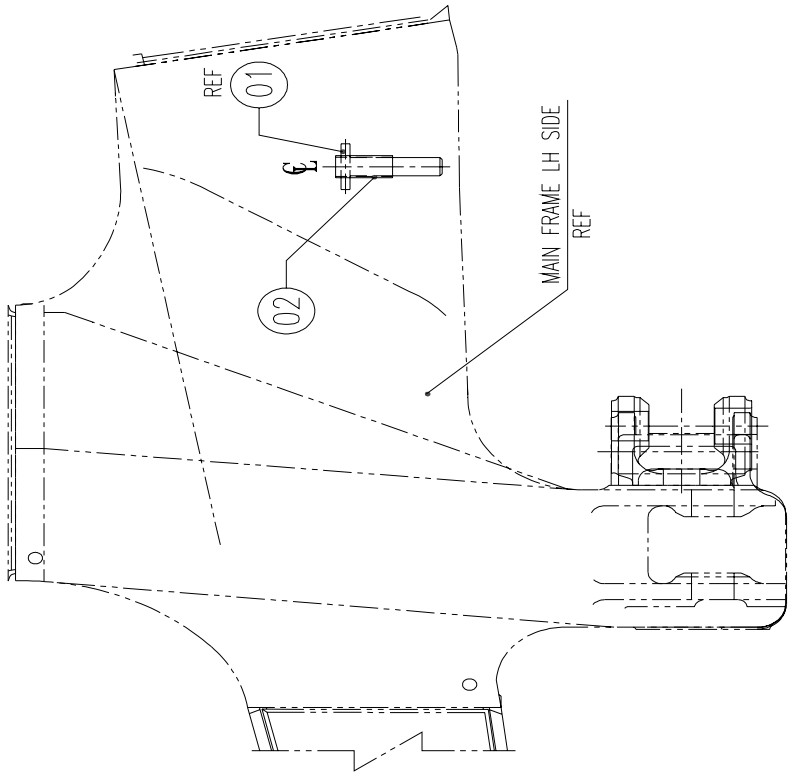

PIN POSITION IN UNLOCK CONDITION

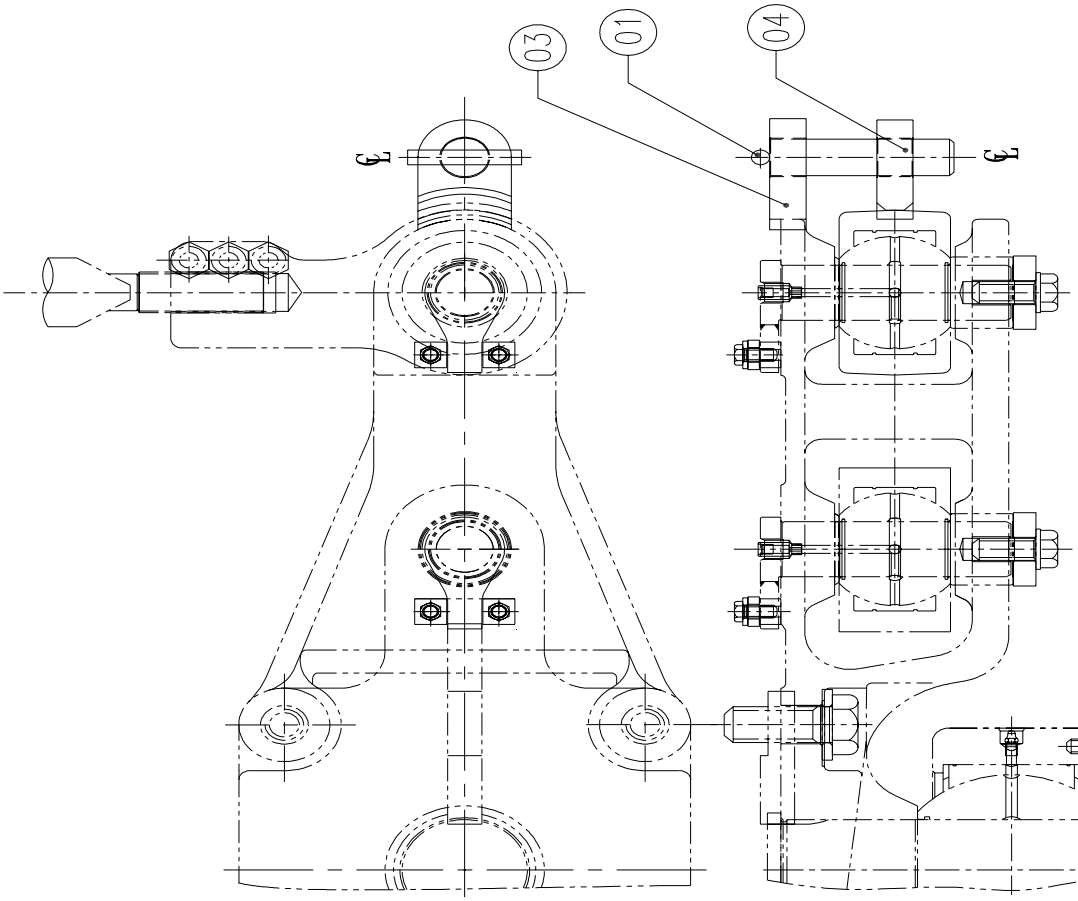

LOCKING POSITION LH SIDE

SLNO	PART NUMBER	DESCRIPTION	QTY	REMARKS
	953-SS-01104	STEERING LOCK INST.		
01	935-DZ-11643	LOCK PIN STR	1	
02	985-SS-13162	TUBE	1	
03	953-SS-11627	PLATE LOCK	1	
04	953-SS-11635	PLATE LOCK	1	

FIG. 128 STEERING CONTROL UNIT

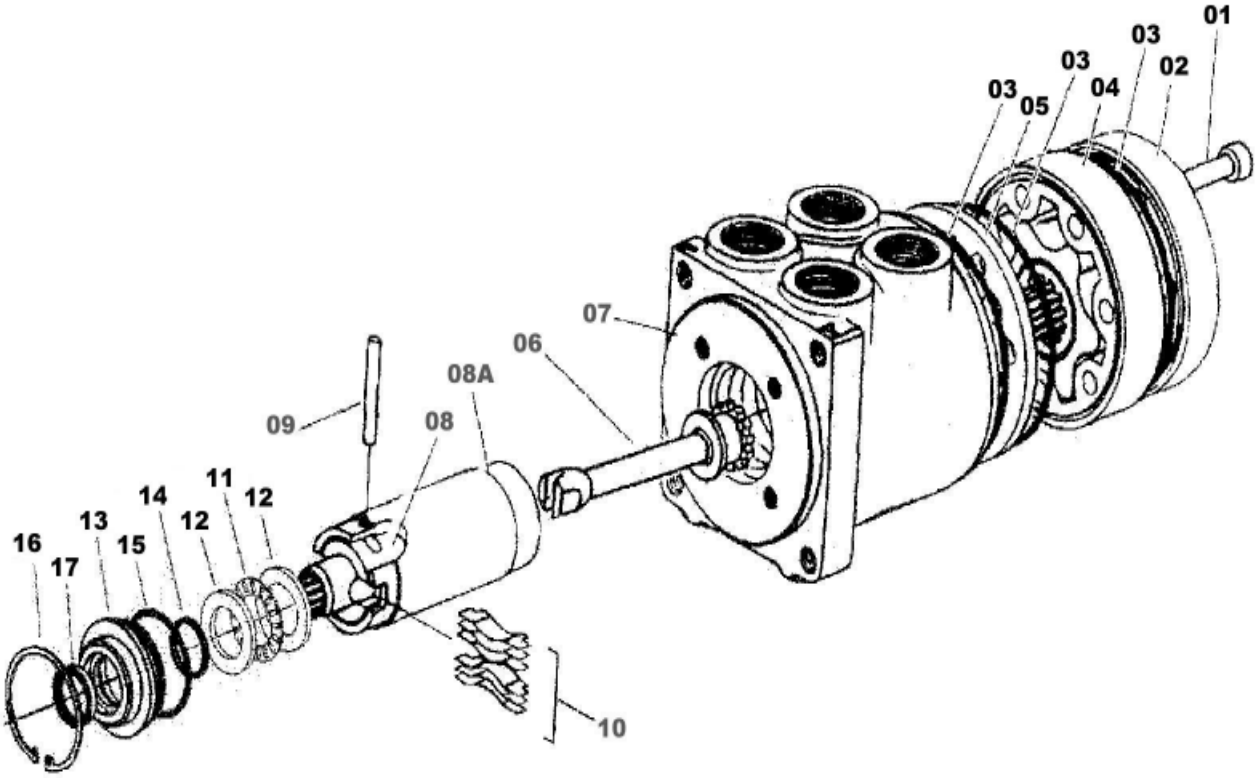

SLNO	PART NUMBER	DESCRIPTION	QTY	REMARKS
	953-HS-02016	STEERING CONTROL UNIT		
01	953-HS-12433	SCREW CAP	7	
02	766-HS-14814	CAP END	1	
03	766-HS-14822	SEAL O-RING	3	
04	953-HS-12441	GEROTOR	1	
05	766-HS-14847	PLATE WEAR	1	
06	766-HS-14855	DRIVE	1	
07	NSS	HOUSING	1	
08	NSS	SLEEVE CONTROL	1	
08A	NSS	SPOOL CONTROL	1	
09	766-HS-14863	PIN CENTERING	1	
10	953-SK-00038	SP. CENTERING KIT	1	
11	766-HS-14888	BEARING NEEDLE	1	
12	766-HS-14896	BEARING RACE	2	
13	766-HS-14903	RETAINER FRONT	1	
14	766-HS-14911	SEAL	1	
15	766-HS-14928	SEAL O-RING	1	
16	766-HS-14936	RING RETAINER	1	
17	766-HS-14944	SEAL DUST	1	
	953-SK-00021	SEAL KIT (INCLUDES SL.NO.03,14,15 &17)		

VI
FRAME AND GUARDS

FIG. 134 MAIN FRAME

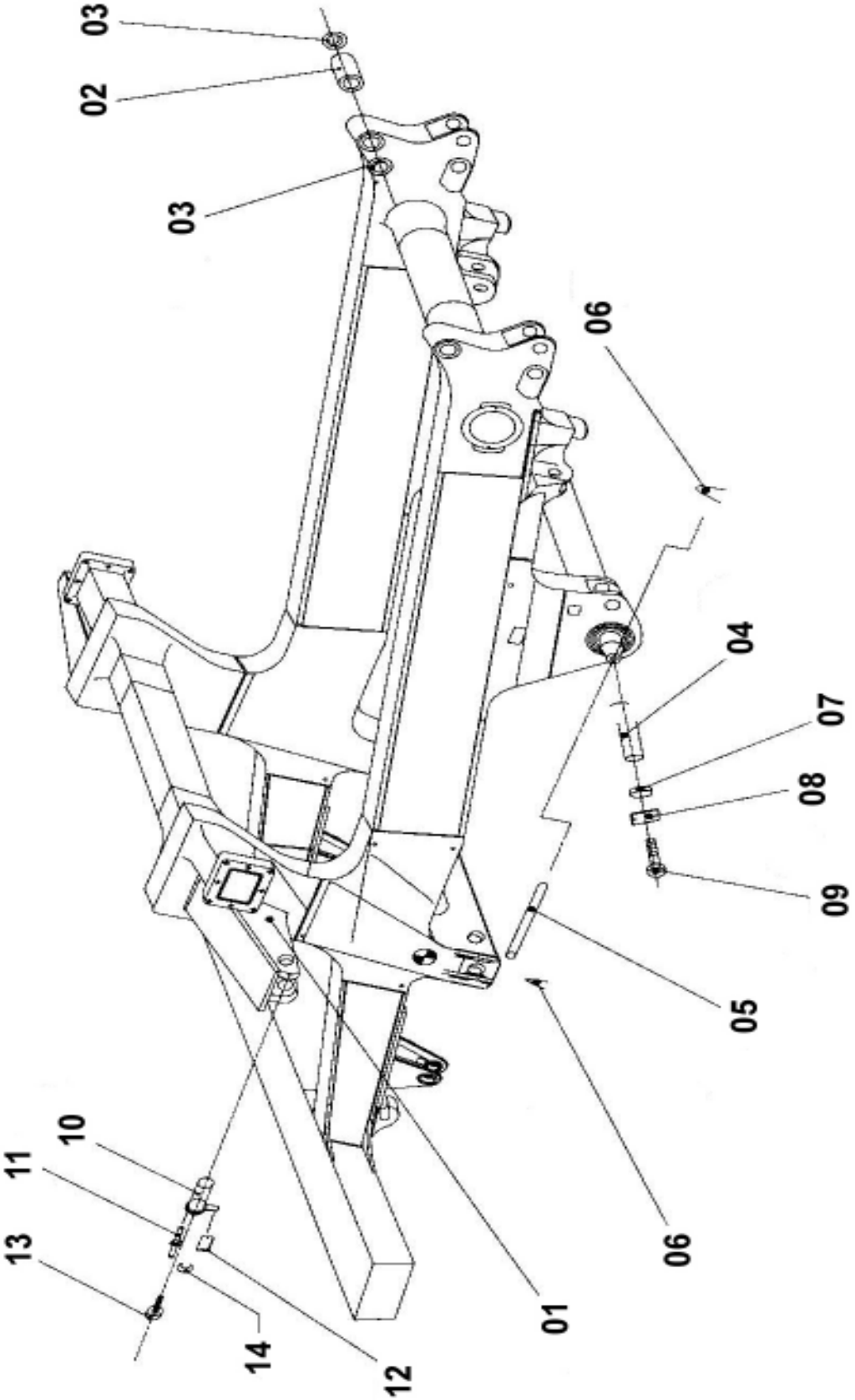

SLNO	PART NUMBER	DESCRIPTION	QTY	REMARKS
01	953-MF-00012	FRAME STR	1	
02	985-MF-11034	BUSHING	2	
03	CDS01-00090	SEAL, DUST	4	
04	985-MF-11018	PIN	2	
05	985-MF-11026	PIN	2	
06	CFP01-05040	PIN, COTTER	4	
07	TFH01-08018	HOLDER	2	
08	TFL01-00816	LOCK	2	
09	CFB01-21640	HEX. BOLT	2	
10	953-PI-01048	PIN	2	
11	CLN01-00000	FITTING GREASE	2	
12	985-BD-11033	PLATE	2	
13	CFB07-21430	HEX. BOLT	4	
14	CFW01-11442	WASHER, SPRING	4	

FIG. 135 FRONT SUSPENSION ASSY.

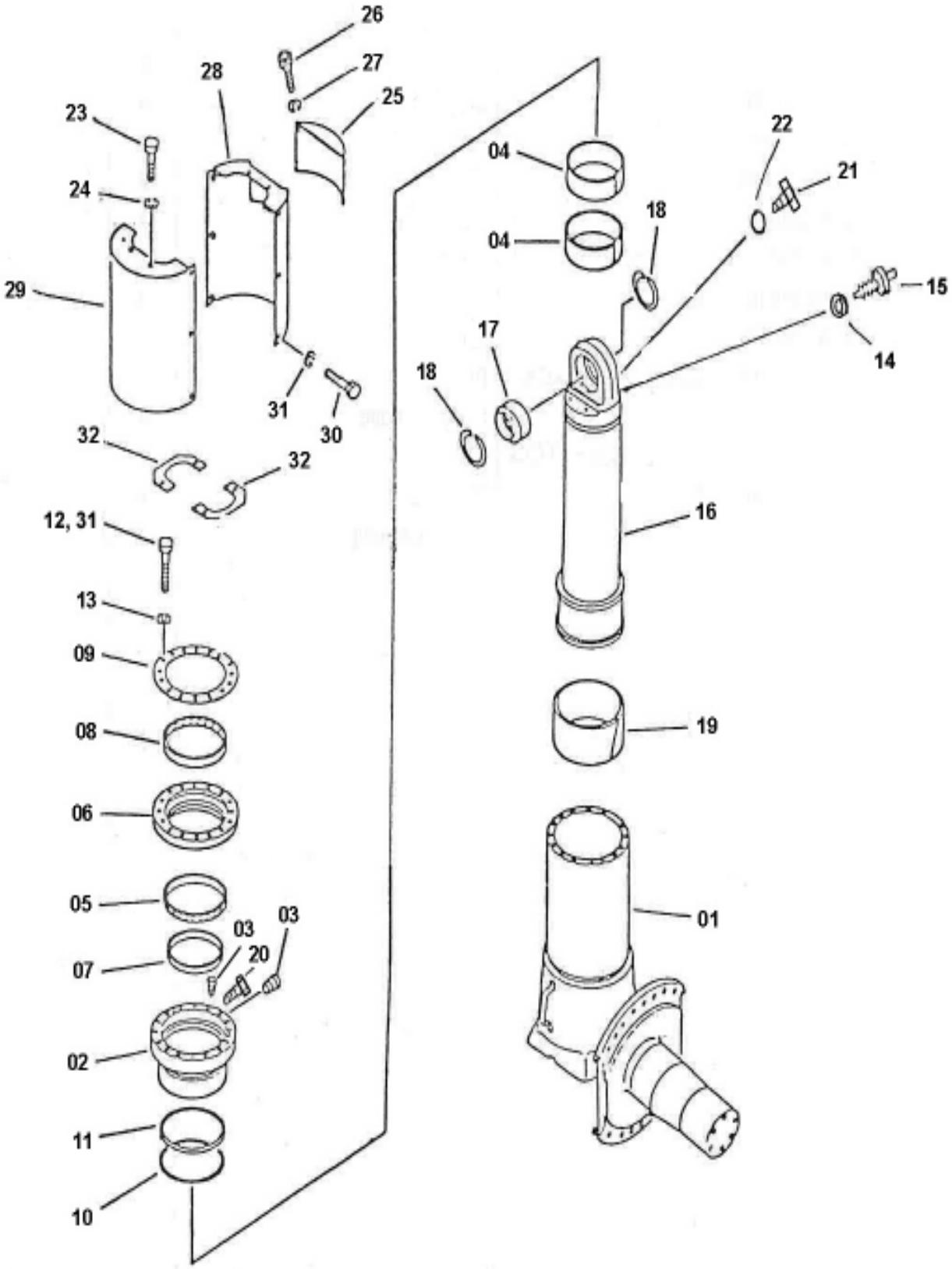

SLNO	PART NUMBER	DESCRIPTION	QTY	REMARKS
	953-SU-01012	FRONT SUSPENSION ASSY		
01	953-SU-02025	OUTER TUBE STR	1	
02	953-SU-21125	LOWER BEARING	1	
03	953-SU-91207	BUFFER SEAL	1	
04	953-SU-91159	ROD SEAL	1	
05	953-SU-91167	WIPER SEAL	1	
06	953-SU-91118	O-RING	2	
07	953-SU-91191	BACKUP RING	2	
08	CFB02-21610	HEX. BOLT	16	
09	CFW05-16045	WASHER	16	
10	953-SU-02033	PISTON ROD STR	1	
11	953-PI-02033	BUSHING	1	
12	CFL04-10160	SNAP RING	2	
13	953-SU-21133	UPPER BEARING	1	
14	953-SU-11515	PLUG	1	
15	564300004640	O-RING	1	
16	PB 2194	CHARGE VALVE	1	
17	953-SU-11146	BOLT	12	
18	CFW05-16045	WASHER	16	
19	VD 5076	GASKET, FLAT	1	
20	953-SU-02082	COVER ASSY	1	
21	953-SU-02074	COVER ASSY	1	
22	CFS01-30812	HEX. SCREW	6	
23	CFW01-10825	WASHER, SPRING	6	
24	953-SU-61091	SEAT	2	
25	CFS01-31020	HEX. SCREW	4	
26	CFW01-11030	WASHER, SPRING	4	
27	953-SU-02058	COVER ASSY	1	
28	CFS01-31020	HEX. SCREW	2	
29	CFW01-11030	WASHER, SPRING	2	
30	CBZ01-01905	SPH. BALL	2	
31	C1109-15016	LOCK WIRE	6	
32	SAE10W	OIL	33lts.	
	953-SU-00016	SEAL KIT		

FIG. 136 REAR SUSPENSION ASSY.

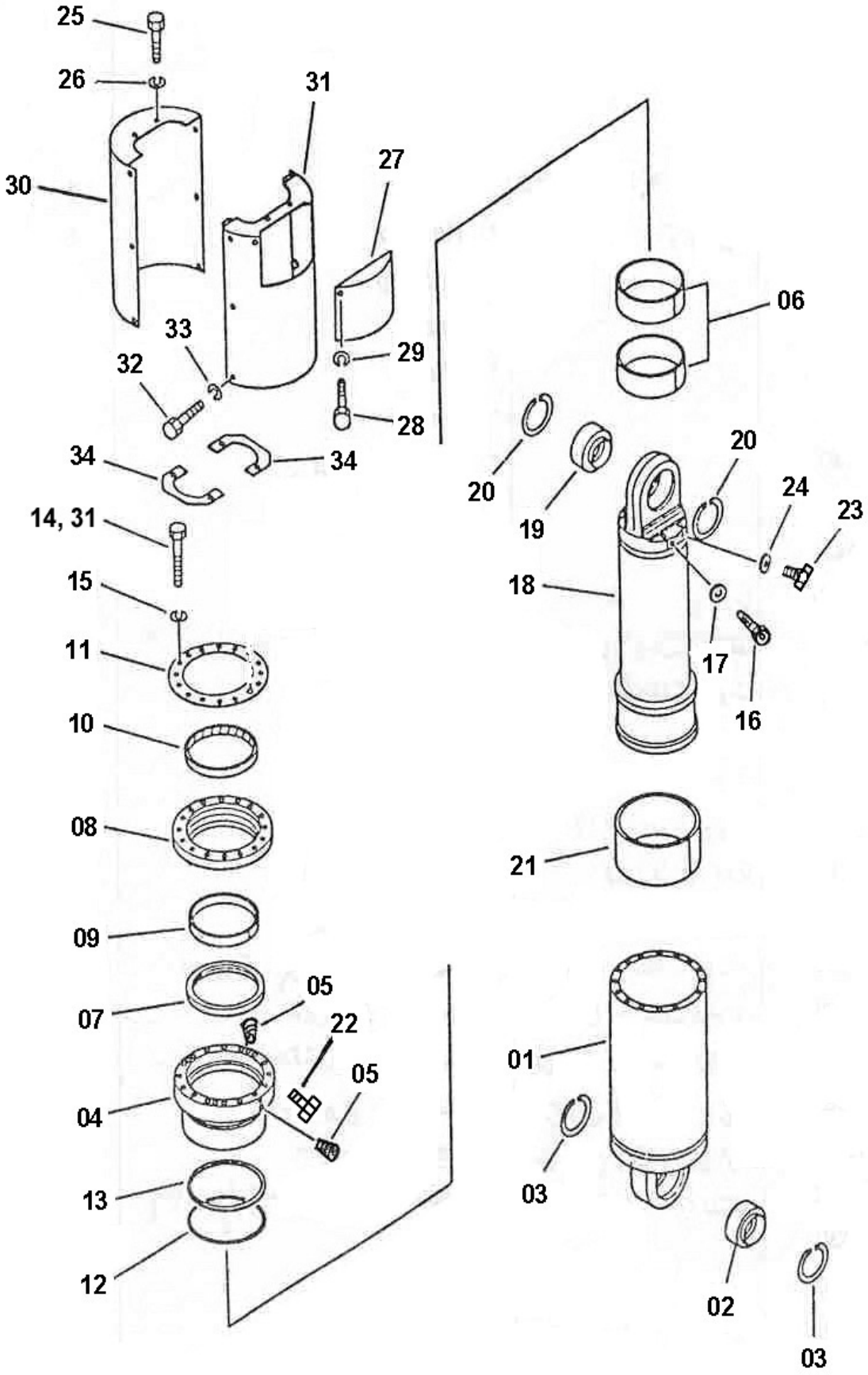

SLNO	PART NUMBER	DESCRIPTION	QTY	REMARKS
	953-SU-01004	REAR SUSPENSION ASSY		
01	953-SU-02009	CYLINDER	1	
02	953-PI-02003	BUSHING	1	
03	CFL04-10160	RING, SNAP	2	
04	953-SU-21125	LOWER BEARING	1	
05	953-SU-91207	BUFFER SEAL	1	
06	953-SU-91159	ROD SEAL	1	
07	953-SU-91167	WIPER SEAL	1	
08	953-SU-91118	O-RING	2	
09	953-SU-91191	BACK-UP RING	2	
10	CFB02-21610	HEX. BOLT	16	
11	CFW05-16045	WASHER	16	
12	953-SU-02017	PISTON ROD STR	1	
13	953-PI-02003	BUSHING	1	
14	CFL04-10160	RING, SNAP	2	
15	953-SU-21133	UPPER BEARING	1	
16	953-SU-11515	PLUG	1	
17	564300004641	O-RING	1	
18	PB 2194	CHARGE VALVE	1	
19	953-SU-11146	BOLT	12	
20	CFW05-16045	WASHER	12	
21	VD 5076	GASKET FLAT	1	
22	953-SU-02066	COVER ASSY	1	
23	953-SU-02041	COVER ASSY	1	
24	CFS01-30812	HEX. SCREW	6	
25	CFW01-10825	WASHER, SPRING	6	
26	953-SU-61091	SEAT	2	
27	CFS01-31020	HEX. SCREW	2	
28	CFW01-11030	WASHER, SPRING	2	
29	953-SU-02058	COVER ASSY	1	
30	CBZ01-01587	SPH. BALL	2	
31	C1109-15016	LOCK WIRE	6	
32	SAE10W	OIL	31.5lts.	
	953-SU-00016	SEAL KIT		

FIG. 137 FENDER SUPPORTS & GRILL ASSY.

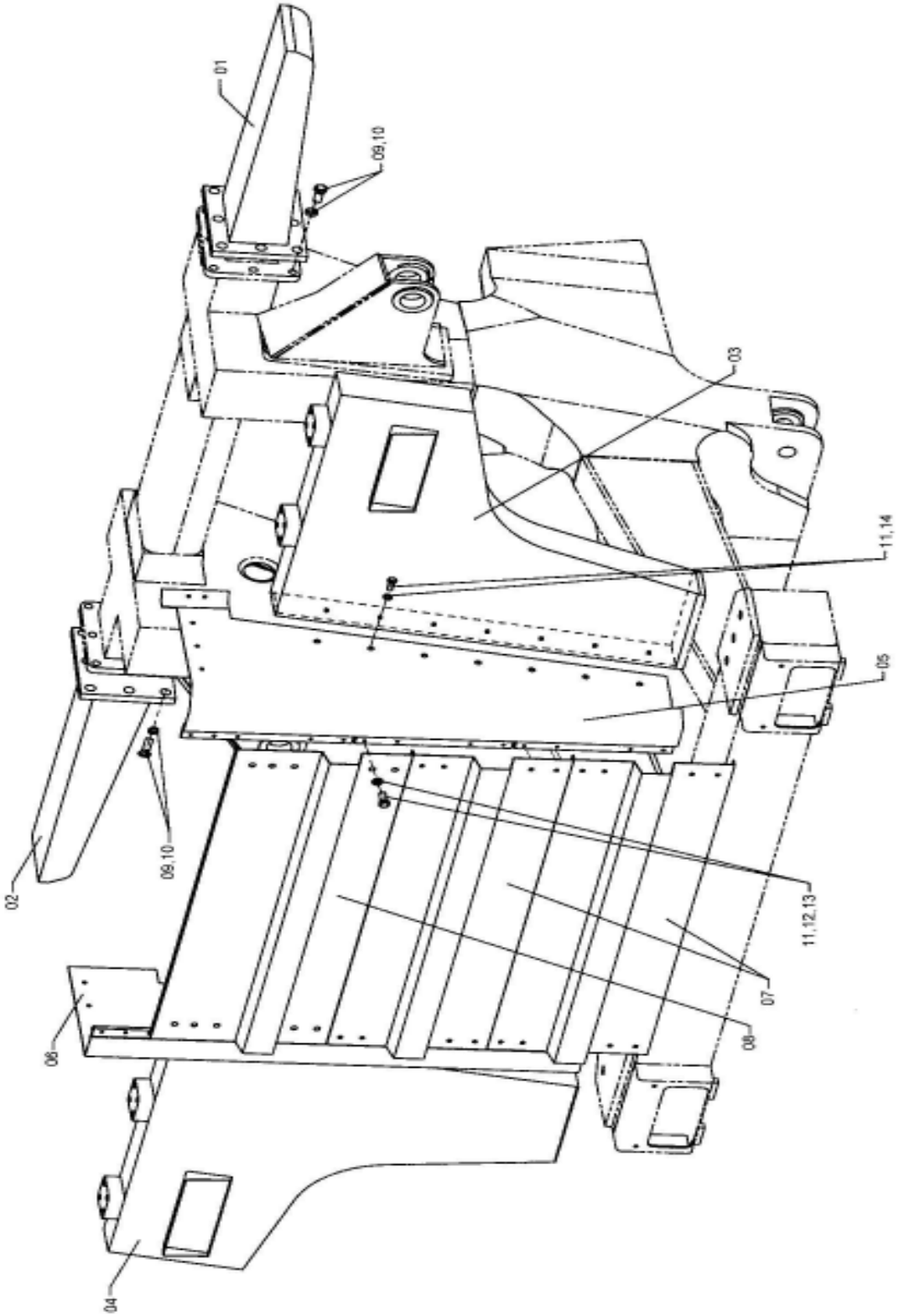

SLNO	PART NUMBER	DESCRIPTION	QTY	REMARKS
01	953-FE-02007	REAR FENDER STR. LH	1	
02	953-FE-02015	REAR FENDER STR. RH	1	
03	953-FE-01019	FRONT FENDER STR. LH	1	
04	953-FE-01027	FRONT FENDER STR. RH	1	
05	953-FE-01116	FENDER SIDE PLATE STR. LH	1	
06	953-FE-01043	FENDER SIDE PLATE STR. RH	1	
07	766-FE-01059	GRILL STR	2	
08	953-FE-01051	GRILL STR	1	
09	CFB07-13075	HEX. BOLT	16	
10	CFW01-13075	WASHER, SPRING	16	
11	CFS01-13075	HEX. SCREW	38	
12	CFW02-11245	WASHER	24	
13	CFW01-11236	WASHER, SPRING	38	

FIG. 138 CABIN & FLOOR INST.

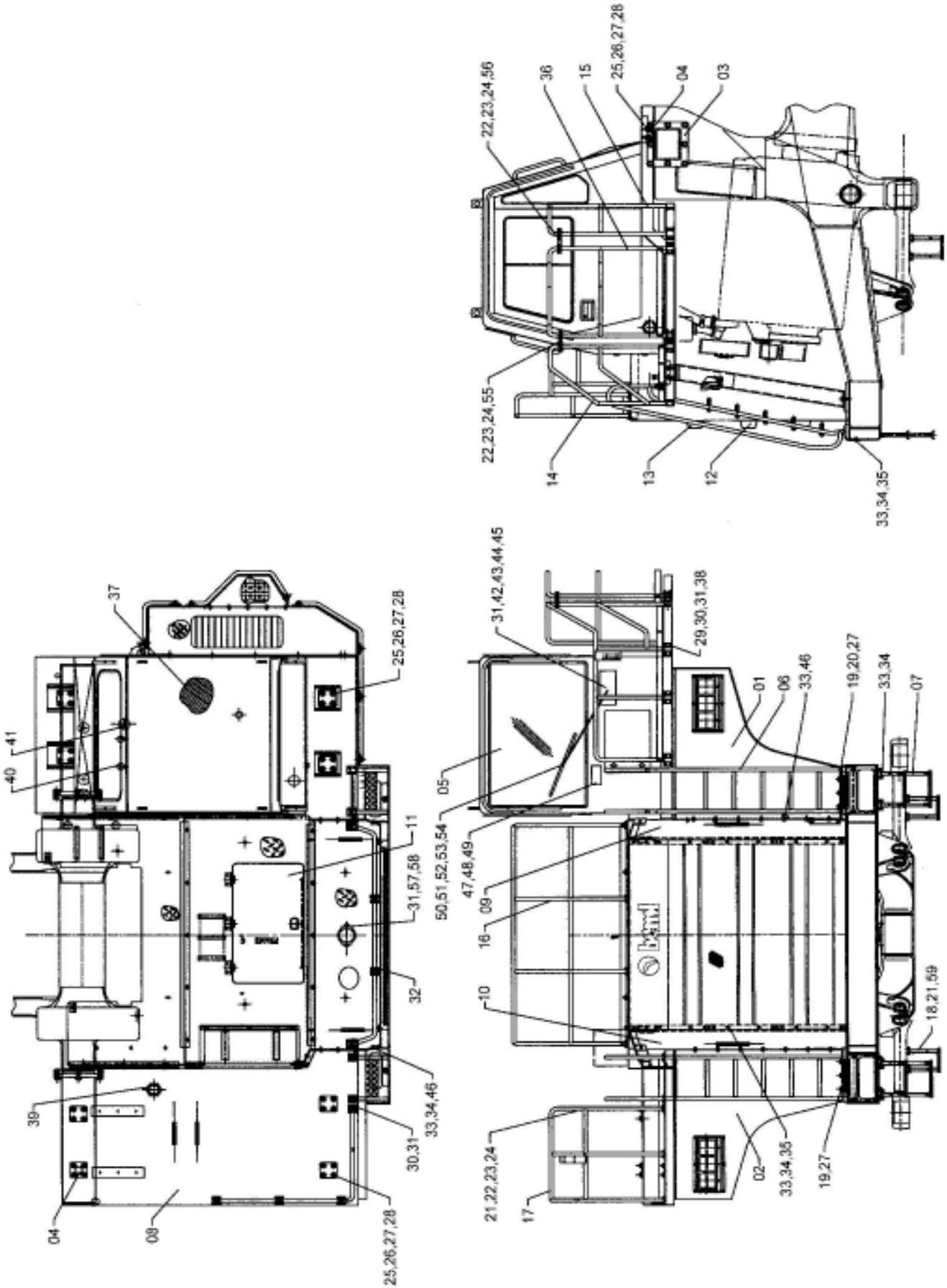

SLNO	PART NUMBER	DESCRIPTION	QTY	REMARKS
	953-HP-00048	CAB AND FLOOR INST.		
01	953-FE-01108	FRONT FENDER STR.L.H	1	
02	953-FE-01092	FRONT FENDER STR.R.H	1	
03	953-FE-01002	REAR FENDER INSTLN	REF	
04	953-FE-11088	TAPPED PAD	4	
05	953-RC-02089	ROPS CAB ASY	1	
06	953-HP-02332	LADDER ASSY	1	
07	953-HP-02349	WIRE STEP	2	
08	953-HP-01003	FLOOR STR.L.H	1	
09	953-FE-01116	FENDER PLATE STR.L.H	1	
10	953-FE-01043	FENDER PLATE STR.R.H	1	
11	953-HP-01166	CENTER DECK STR	1	
12	953-FE-01059	GRILL STR	2	
13	953-FE-01051	GRILL STR	1	
14	953-HP-01174	HAND RAIL STR.L.H-1	1	
15	953-HP-01206	HAND RAIL STR.L.H-2	1	
16	953-HP-01075	HAND RAIL STR. (CENTER DECK)	1	
17	953-HP-01052	HAND RAIL STR.R.H-1	1	
18	935-CH-03179	STEP	2	
19	CFS01-32450	SCREW M24	6	
20	CFW05-24060	WASHER	3	
21	CFS01-31230	HEX SCEREW	8	
22	CCC07-23442	CLIP	4	
23	CFN28-21011	NUT M10	8	
24	CFW05-10032	WASHER	8	
25	CFB01-22480	HEX, BOLT,M24	32	
26	CFW05-12440	WASHER	32	
27	CFW01-12472	SPRING WASHER	38	
28	953-HP-61122	WASHER, RUBBER	8	
29	571836000130	TAPPED PAD	8	
30	CFS01-11020	HEX, SCREW,M10	84	
31	CFW01-11030	SPRING WASHER	84	
32	778-HP-10239	TAPPED PAD	6	
33	CFS01-11225	HEX, SCREW,M12	62	
34	CFW02-11245	WASHER	48	

FIG. 138 CABIN & FLOOR INST.

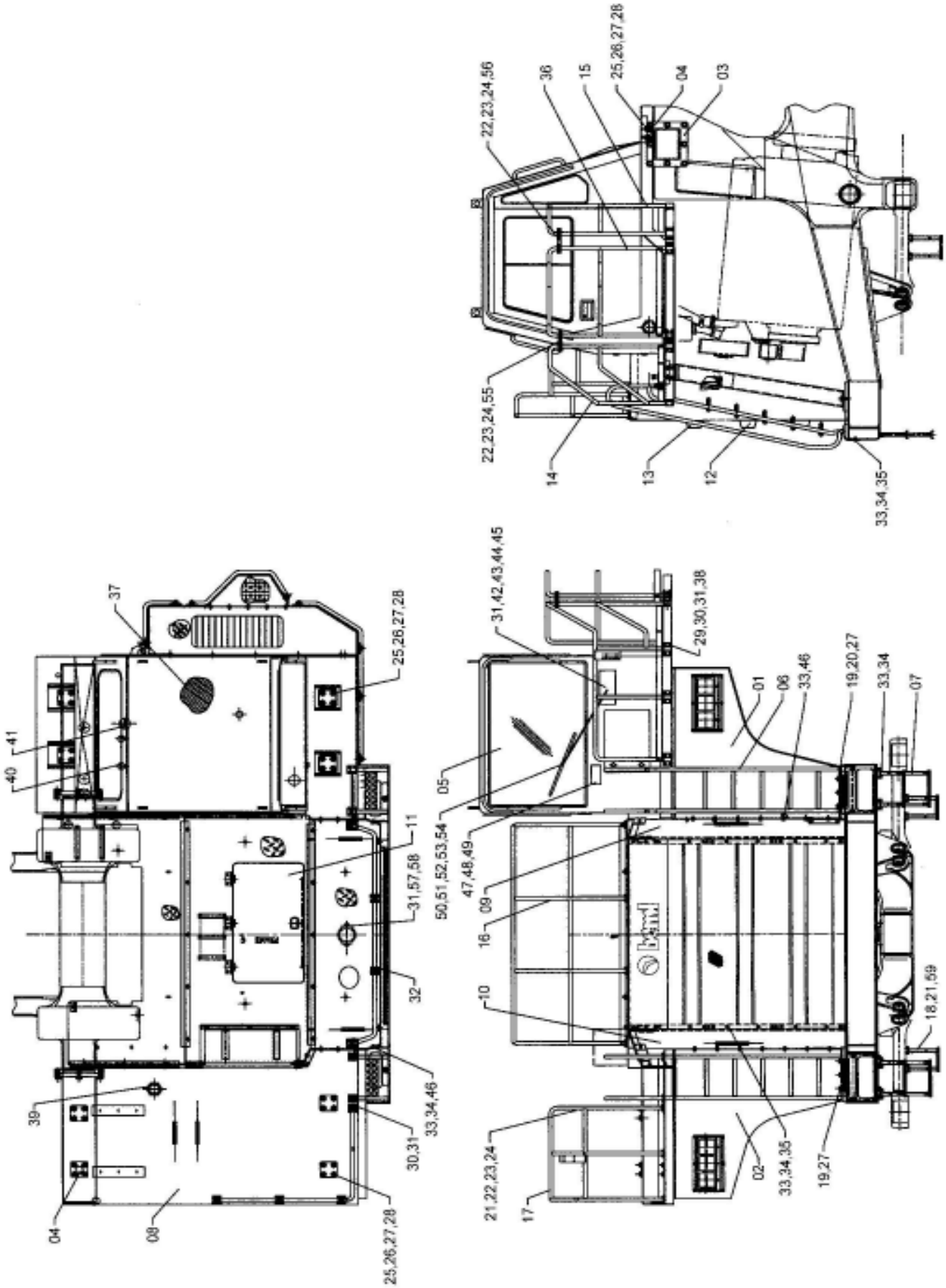

SLNO	PART NUMBER	DESCRIPTION	QTY	REMARKS
35	CFW01-11236	SPRING WASHER	30	
36	953-HP-01182	HAND RAIL STR.L.H-3	1	
37	953-RC-67132	FLOOR MATS	1	
38	CFW01-11020	PLAIN WASHER	32	
39	953-HP-73727	GROMMET	3	
40	955-CC-63627	GROMMET	5	
41	955-CC-63635	GROMMET	3	
42	CFS01-21015	HEX, SCREW,M10	3	
43	CFW02-10616	PLAIN WASHER	3	
44	CFW01-10619	SPRING WASHER	3	
45	CFS01-21016	HEX SCEREW	5	
46	CFW23-11332	WASHER	26	
47	953-EG-71437	DECAL (RELAY MTG)	1	
48	CFS02-10408	SCREW	2	
49	CFS02-10408	WASHER	2	
50	778-RC-70056	LINK ROD	1	
51	935-CC-01059	WIPER MOTOR	1	
52	935-CC-01067	SPINDLE KIT	1	
53	778-CC-10357	WIPER ARM	1	
54	778-CC-10365	WIPER BLADE	1	
55	953-HP-13835	PLATE HANDRAIL	1	
56	953-HP-13843	PLATE HANDRAIL	1	
57	985-HP-11028	COVER	1	
58	CFS01-11016	HEX SCEREW	2	
59	CFW05-12032	WASHER	8	

FIG. 139 ROPS CABIN ASSY.

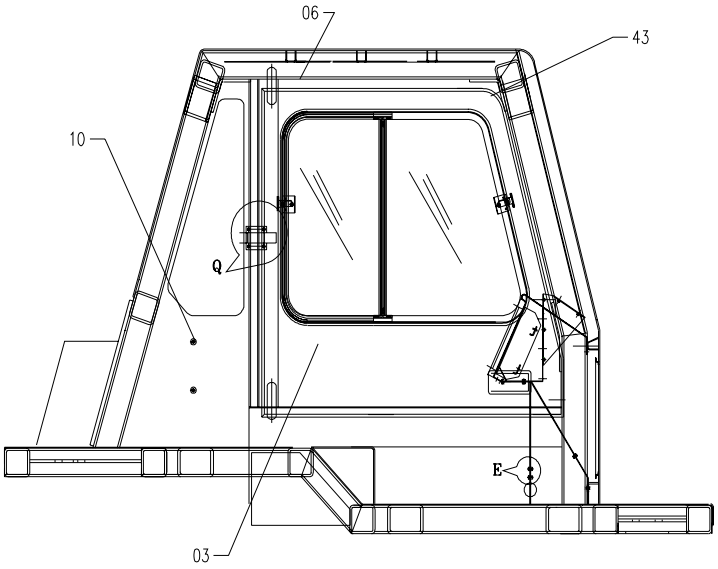

RH SIDE VIEW

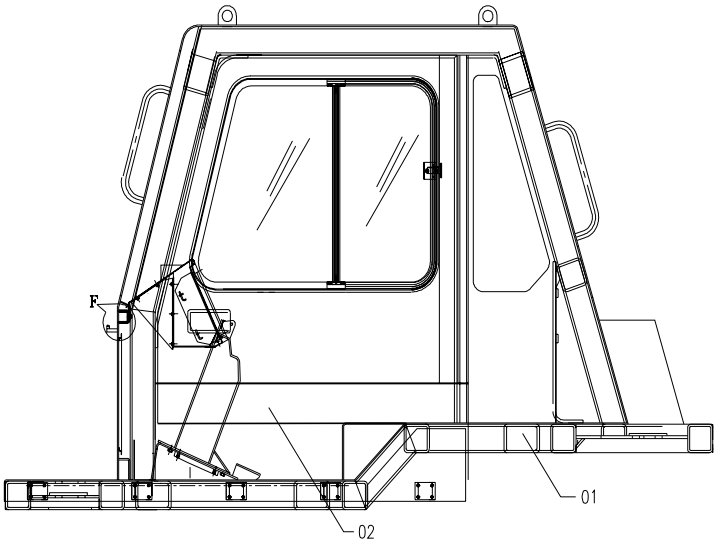

LH SIDE VIEW

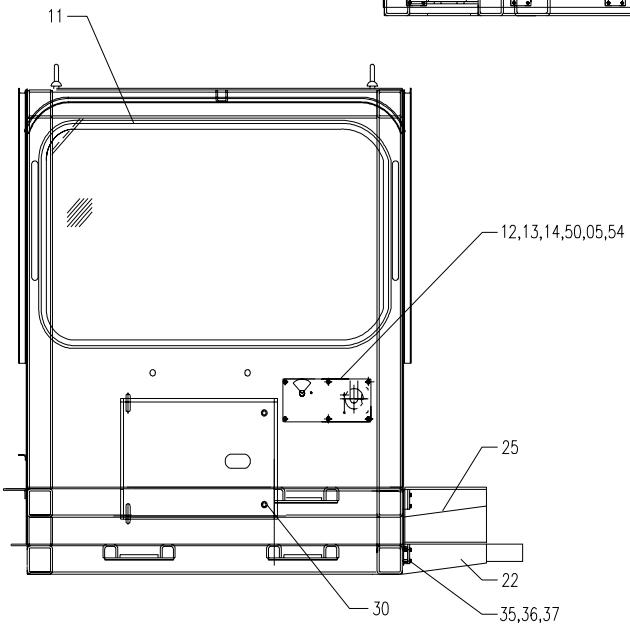

FRONT VIEW

SLNO	PART NUMBER	DESCRIPTION	QTY	REMARKS
	953-RC-02218	ROPS CABIN ASSY.		
01	953-RC-03077	ROPS CABIN STR.	1	
02	953-RC-03085	DOOR ASSY. LH	1	
03	953-RC-03093	DOOR ASSY. RH	1	
04	778-CC-02119	HINGE ASSY. DOOR	4	
05	CFS15-10612	HEX. SCREW	6	
06	953-RC-67416	RUBBER SEAL, DOOR	AR	
07	953-RC-02201	BUDDY SEAT ASSY.	1	
08	953-RC-67432	BEADING 1”	AR	
09	R 1073-3	DRIVE SCREW	4	
10	CPW13-10022	TAPPED PAD	2	
11	953-RC-67424	RUBBER SEAL, WIND SHIELD	AR	
12	985-RC-02141	PLATE, WIPER MOTOR MTG.	1	
13	985-RC-02158	COVER, WIPER MOTOR	1	
14	CFS01-21015	HEX. SCREW	6	
15	CCC05-08065	CLAMP	2	
16	953-RC-03539	WIRE HARNESS	1	
17	955-CC-92511	HARD BOARD	AR	
18	953-RC-67392	DOOR SEAL RBBER	AR	
19	778-CC-60091	WIND SHIELD WASHER KIT	1	
20	953-EG-81327	ROOF LAMP	1	
21	778-CC-10373	COAT HOOK	2	
22	953-RC-03104	CATWALK STR. FRONT	1	
23	955-CC-02211	BRACKET (WATER BOT.)	1	
24	955-CC-02106	SWITCH	5	
25	953-RC-03125	CATWALK STR. REAR	1	
26	953-RC-67287	FLOOR MATS	1	
27	953-IP-03022	CONSOLE STR.	1	
28	25mmX2t	RUBBER STRIP	1	
29	953-RC-03141	SONY SPEAKERS	2	
30	778-CC-10584	KNOB HEAD	2	
31	CFS15-20620	HEX. SCREW	16	
32	955-CC-02114	DOOR STOPPER BRACKET	2	
33	778-CC-10324	DOOR STOPPER (RUBBER)	2	
34	953-EG-11812	PLATE (MILL CON.)	1	

FIG. 139 ROPS CABIN ASSY.

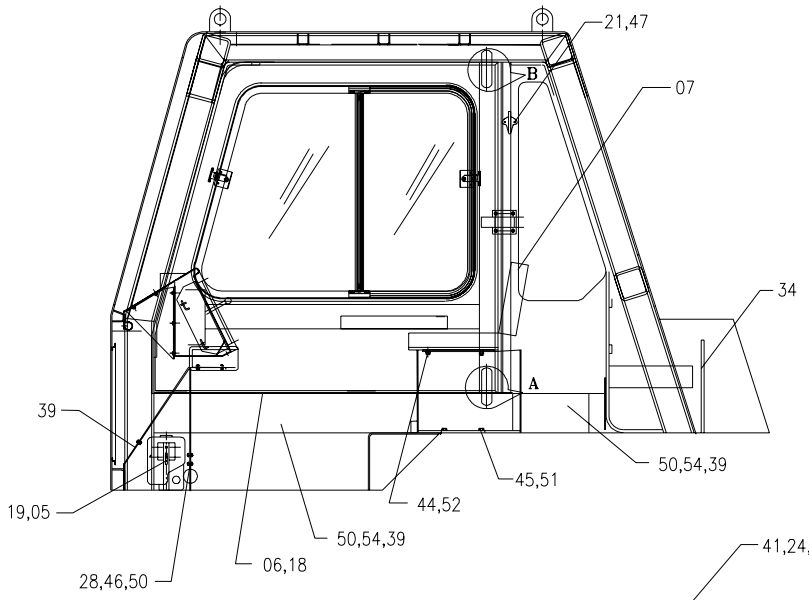

INSIDE RH SIDE VIEW

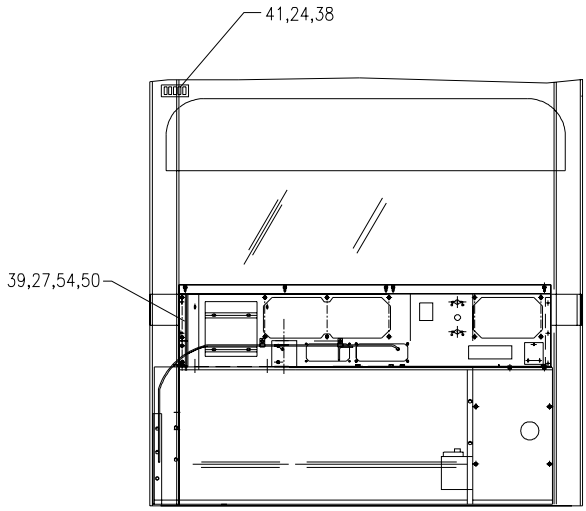

INSIDE FRONT VIEW

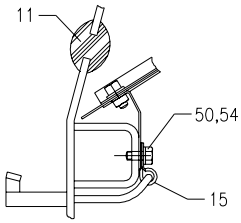

DETAIL F

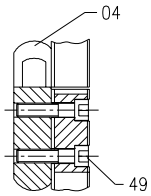

SECTION GG

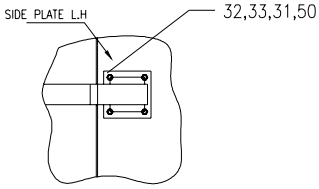

DETAIL Q

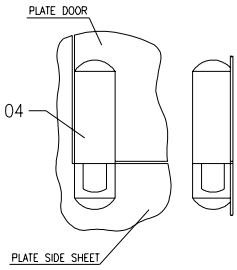

DETAIL A

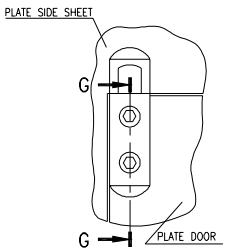

DETAIL B

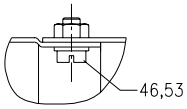

DETAIL D

SLNO	PART NUMBER	DESCRIPTION	QTY	REMARKS
35	CFS01-31425	HEX. SCREW	32	
36	CFW02-11445	PLANE WASHER	32	
37	CFW01-11442	SPRING WASHER	32	
38	CFS01-20510	SCREW COUNTER SUNK	4	
39	953-RC-67213	ANTI VIBRATION PAD	AR	
40	953-RC-67319	P.U. FOAM	AR	
41	955-CC-74562	SWITCH BOX	1	
42	778-CC-60026	POUCH, LEATHER	1	
43	953-RC-67343	SOUND DEADNER PAD	26	
44	CFS01-20825	HEX. SCREW	7	
45	CFS01-21020	HEX. SCREW	12	
46	CFS02-10612	CHEESE HEAD SCREW	56	
47	CFS11-20410	SCREW COUNTER SUNK	7	
48	985-DZ-21384	NAME PLATE	1	
49	CFS13-21250	SCREW SOCKET HEAD	4	
50	CFW01-10619	SPRING WASHER	51	
51	CFW01-11030	SPRING WASHER	24	
52	CFW02-10616	PLANE WASHER	37	
53	CFW01-10825	SPRING WASHER	5	
54	CFS15-10616	HEX. SCREW	33	
55	953-RC-67449	BEADING 3/4”	AR	

FIG. 139 ROPS CABIN ASSY.

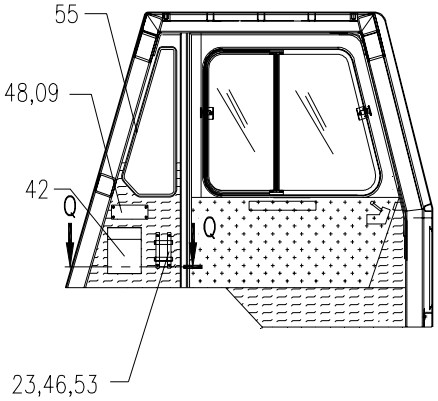

LH SIDE (FROM INSIDE)

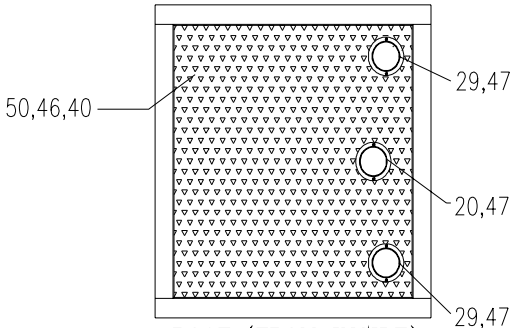

ROOF (FROM INSIDE)

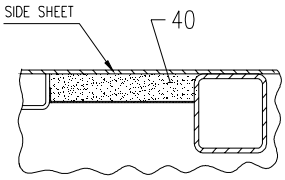

SECTION QQ

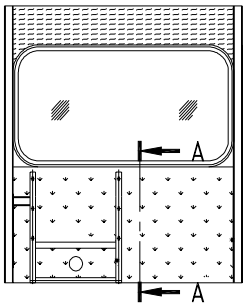

REAR SIDE (FROM INSIDE)

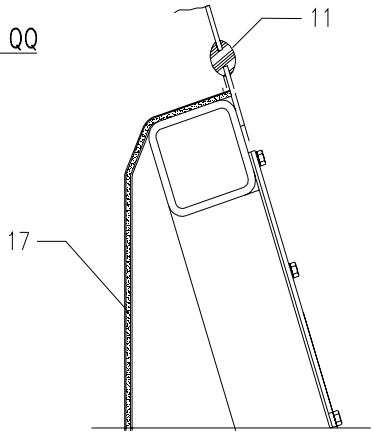

SECTION AA

FIG. 140 SEAT INSTALLATION

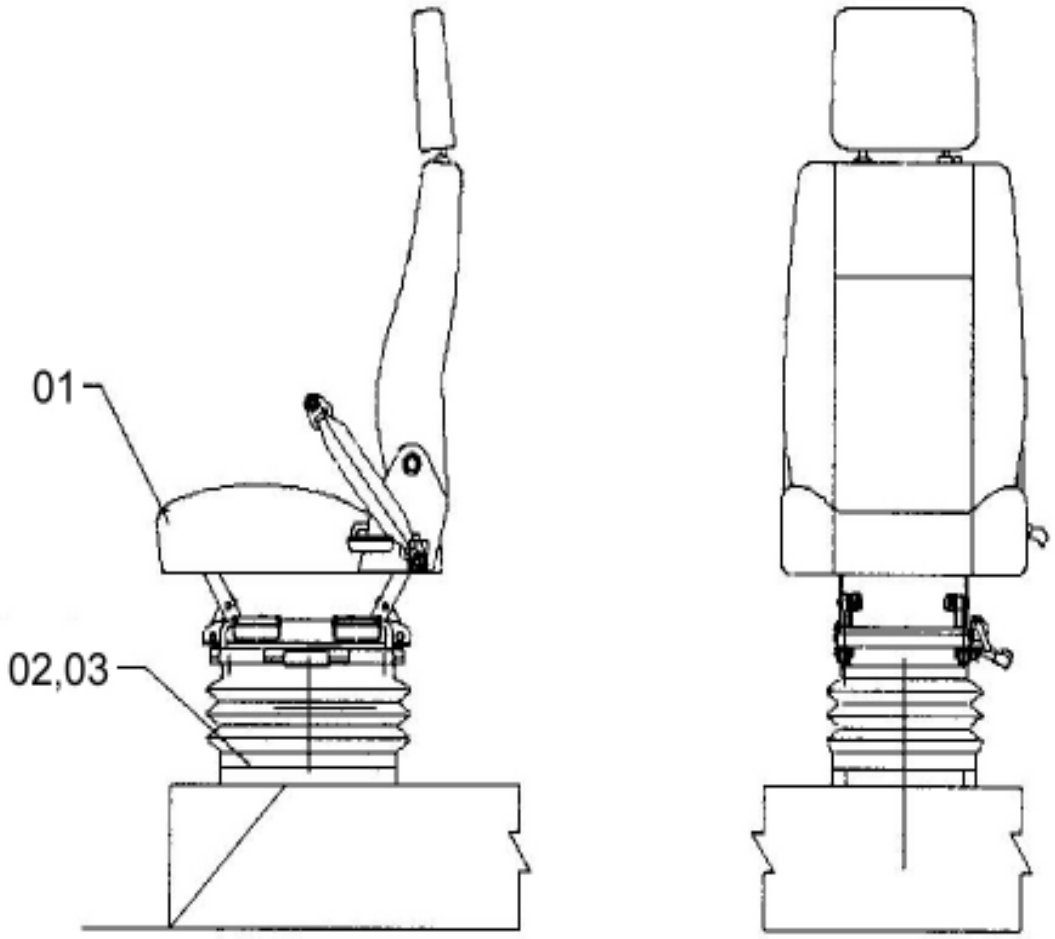

SLNO	PART NUMBER	DESCRIPTION	QTY	REMARKS
01	955-OS-02009	DRIVER SEAT	1	
02	CFS01-10815	HEX. SCREW	4	
03	CFW01-10823	WASHER, SPRING	4	

FIG. 141 CENTER DECK STR.

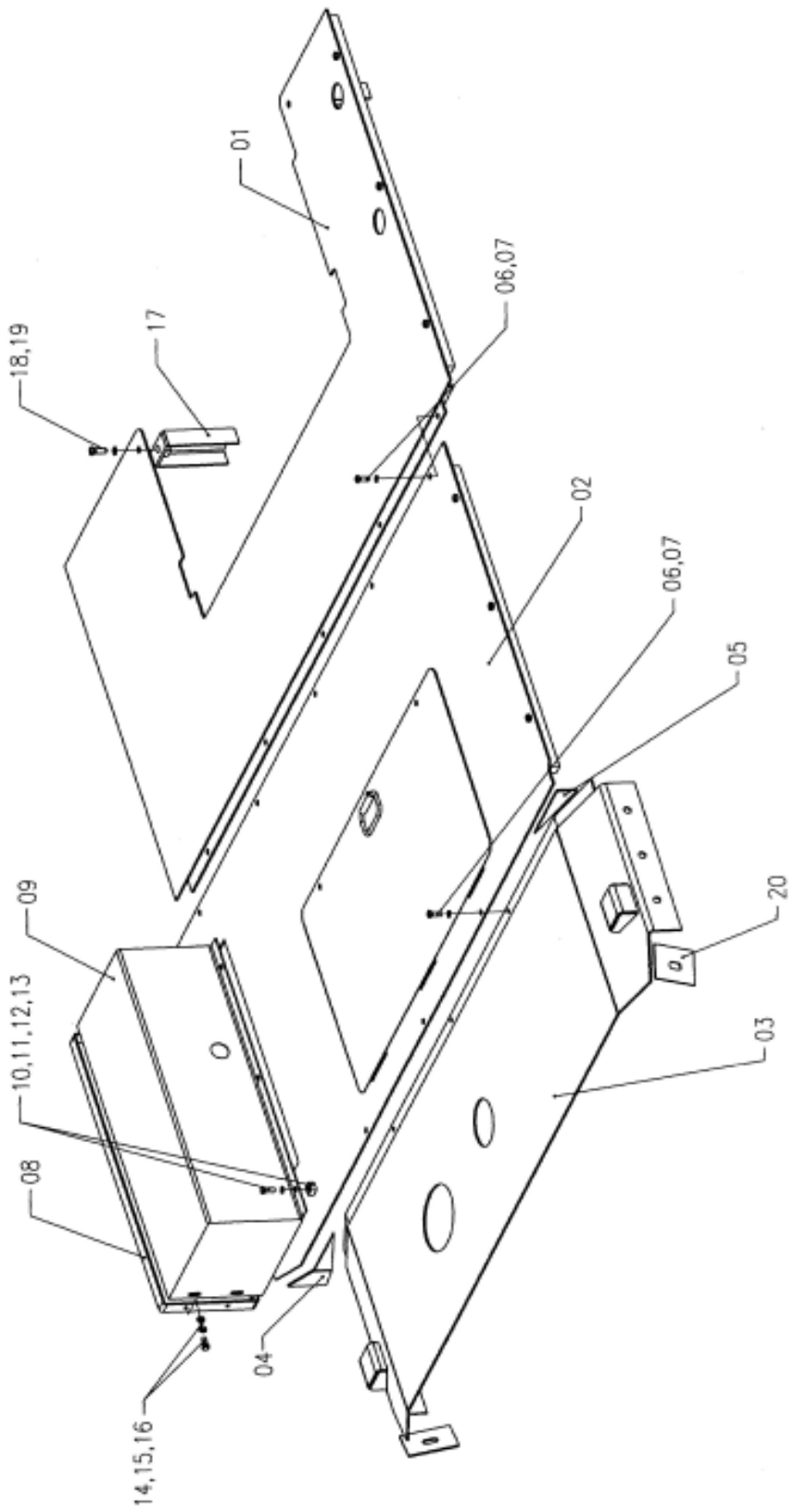

SLNO	PART NUMBER	DESCRIPTION	QTY	REMARKS
	953-HP-01166	CENTER DECK STR		
01	953-HP-02276	PLATE STR REAR	1	
02	953-HP-02284	PLATE STR CENTER	1	
03	953-HP-02073	PLATE STR FRONT	1	
04	953-HP-13551	PLATE	1	
05	953-HP-13543	PLATE	1	
06	CFS01-11030	HEX. SCREW	8	
07	CFW05-12032	WASHER	8	
08	953-HP-02308	BAND STR	1	
09	953-HP-02316	COVER STR	1	
10	CPW13-12025	TAPPED PAD	3	
11	CFS01-11220	HEX. SCREW	3	
12	CFW02-12250	WASHER	3	
13	CFW01-11236	WASHER, SPRING	3	
14	CFS01-10825	HEX. SCREW	4	
15	CFW02-10816	WASHER	4	
16	CFW01-10825	WASHER, SPRING	4	
17	953-HP-02121	BRACKET SUPPORT	2	
18	CFS01-11625	HEX. SCREW	2	
19	CFW01-11648	WASHER, SPRING	2	

FIG. 142 ENGINE GUARD INSTALLATION

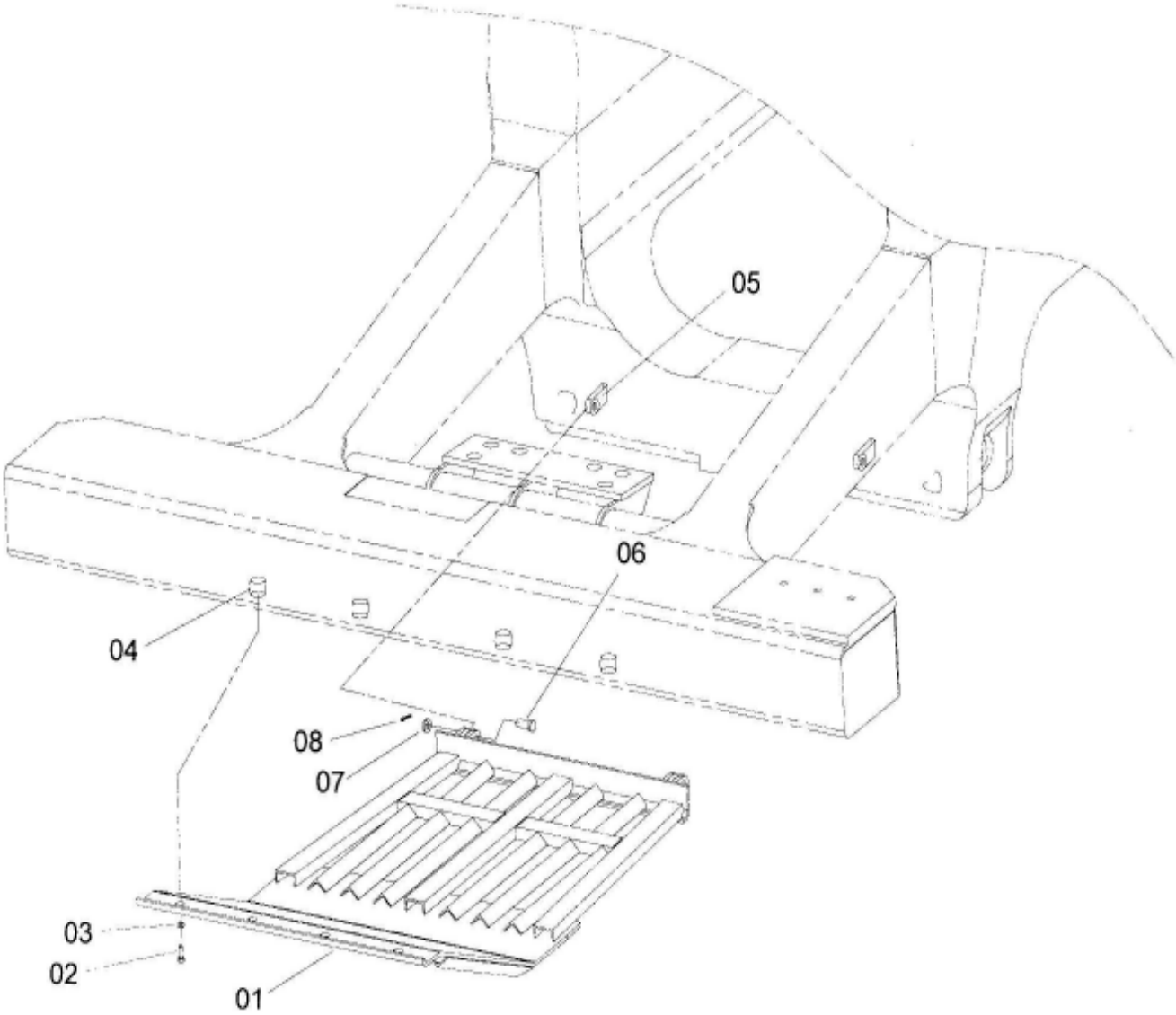

ENGINE GUARD INSTALLATION

FIG NO. 142

SLNO	PART NUMBER	DESCRIPTION	QTY	REMARKS
	953-FG-00011	ENGINE GUARD INST		
01	953-FG-01073	ENGINE GUARD	1	
02	CFS01-32045	HEX. SCREW	4	
03	CFW05-20060	WASHER	4	
04	CPW09-20040	TAPPED PAD	4	
05	564329000230	PLATE HINGE	2	
06	571809000230	PIN	2	
07	CFW02-13040	WASHER	2	
08	CFP01-08045	COTTER PIN	2	

FIG. 143 TRANSMISSION GUARD INSTALLATION

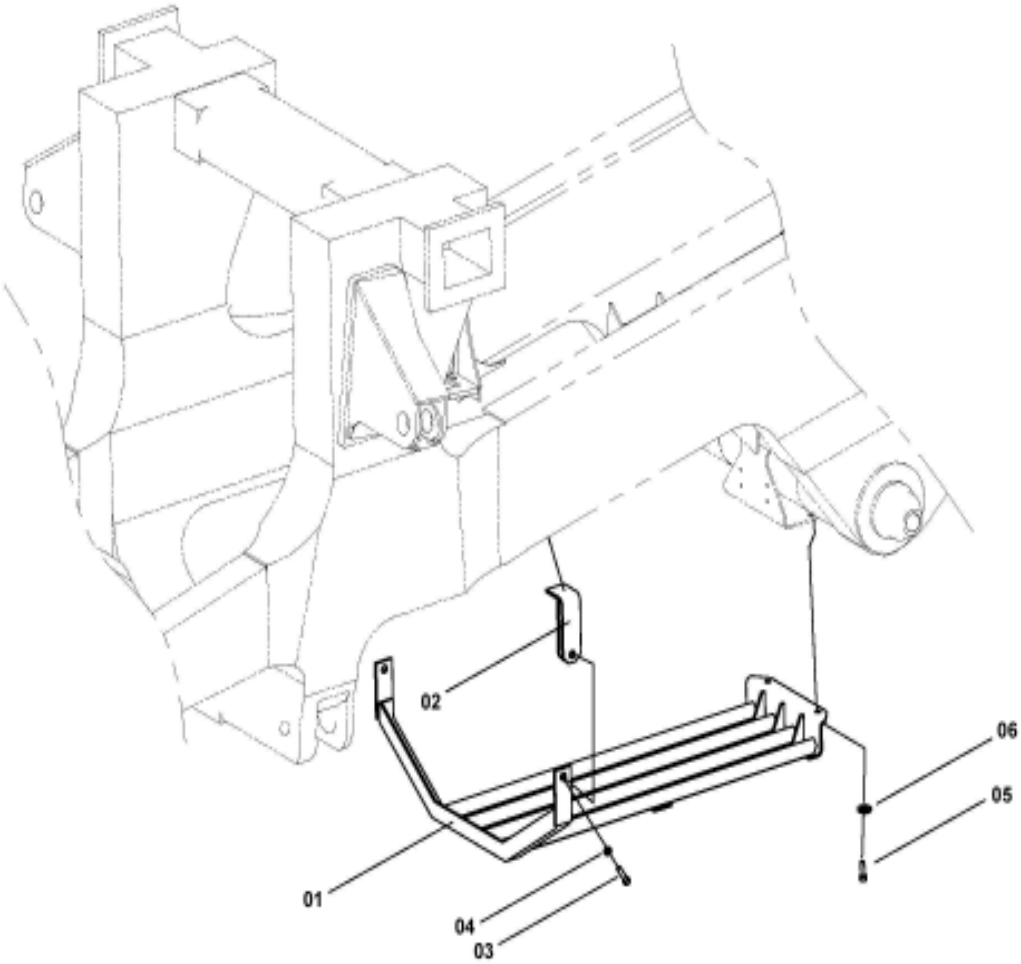

TRANSMISSION GUARD INSTALLATION

FIG NO. 143

SLNO	PART NUMBER	DESCRIPTION	QTY	REMARKS
	953-FG-00028	TRANSMISSION GUARD INST.		
01	953-FG-02191	TRANS. GUARD	1	
02	953-FG-01016	BRACKET	2	
03	CFB07-23085	HEX. BOLT	2	
04	CFN44-13033	HEX. NUT	2	
05	CFS01-32045	HEX. SCREW	2	
06	CFW05-20060	WASHER	2	

FIG. 144 MUD GUARD INST. (1/2)

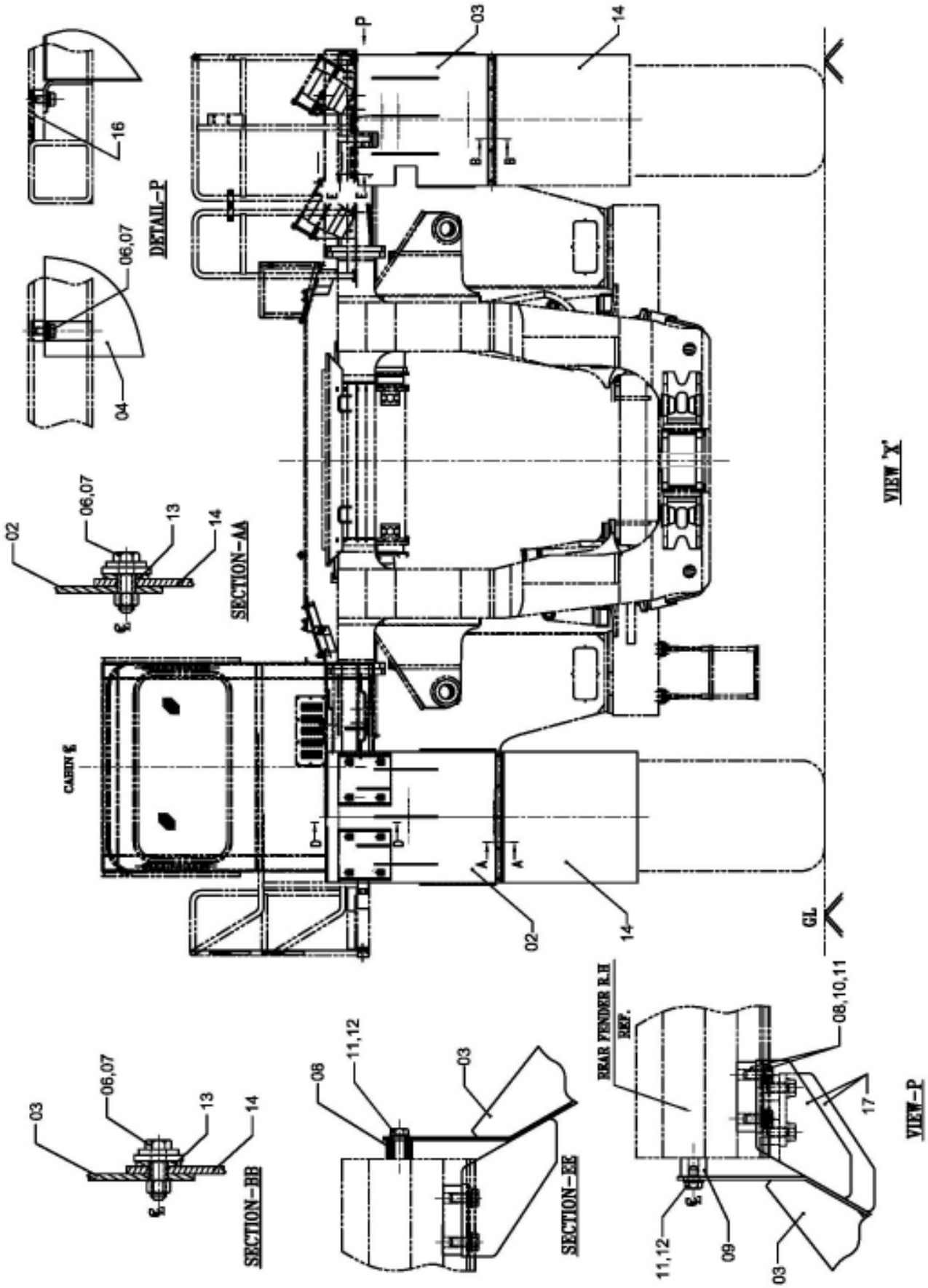

SLNO	PART NUMBER	DESCRIPTION	QTY	REMARKS
	953-FG-01081	MUD GUARD INST.		
01	CFS01-31655	HEX, SCREW	8	
02	953-FE-02207	MUD GUARD STR. LH	1	
03	953-FG-02045	MUD GUARD STR. RH	1	
04	953-FG-02053	ORBITROL GUARD STR	1	
05	CFW01-11648	SPRING WASHER	8	
06	CFS01-31230	HEX, SCREW	14	
07	CFW01-11236	SPRING WASHER	14	
08	CPW35-16100	TAPPED PAD	4	
09	CPW15-16032	TAPPED PAD	2	
10	CFS01-31630	HEX, SCREW	8	
11	CFW01-11648	SPRING WASHER	10	
12	CFS01-31625	HEX, SCREW	2	
13	778-BD-10236	PLATE	2	
14	953-HP-63894	RUBBER	2	
15	CFN01-21211	HEX, NUT	10	
16	CPW25-12082	TAPPED PAD	1	
17	953-FG-12154	GUSSET(RH)	2	

FIG. 144 MUD GUARD INST. (2/2)

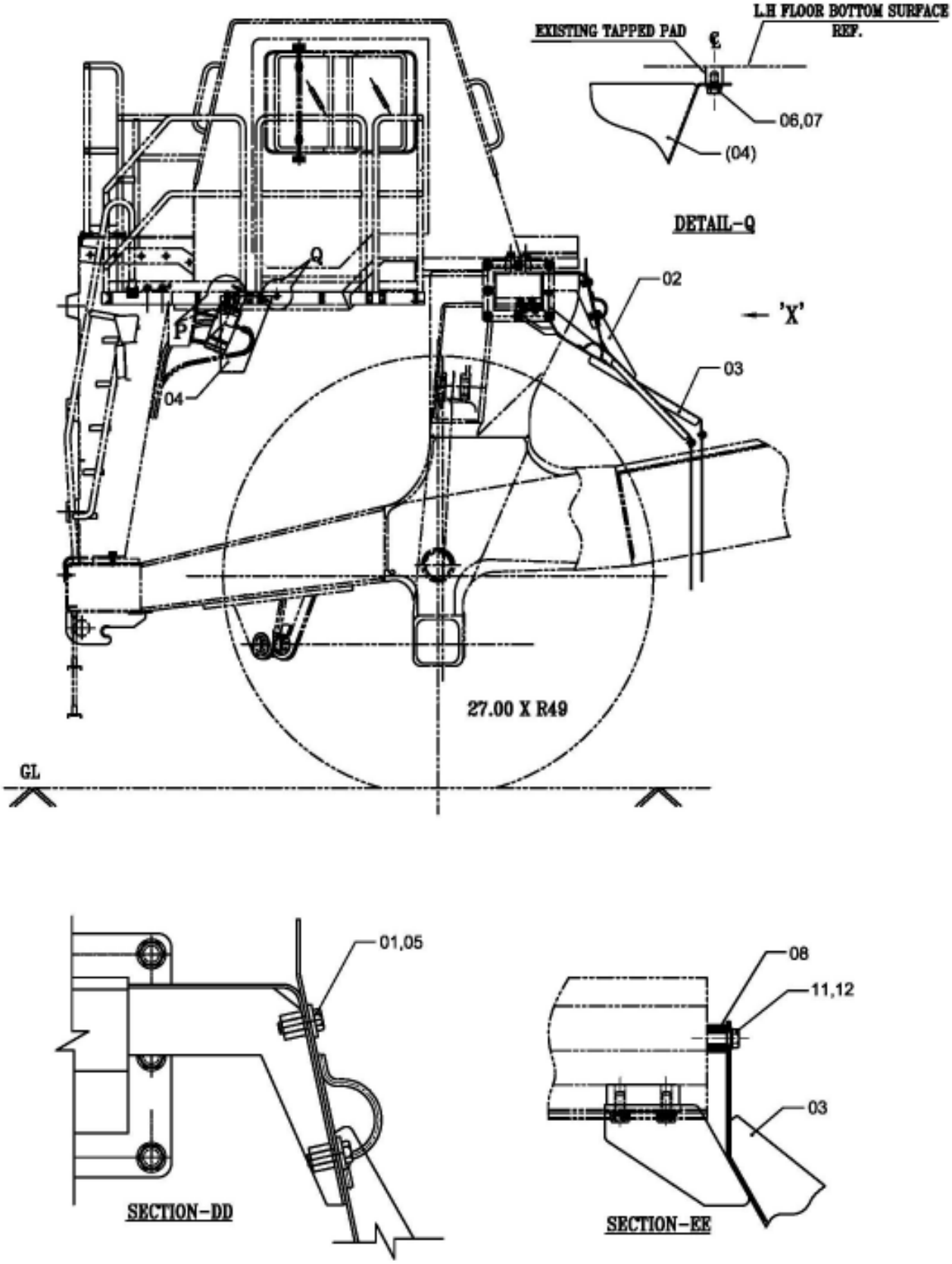

FIG. 145 HEAT GUARD INST.

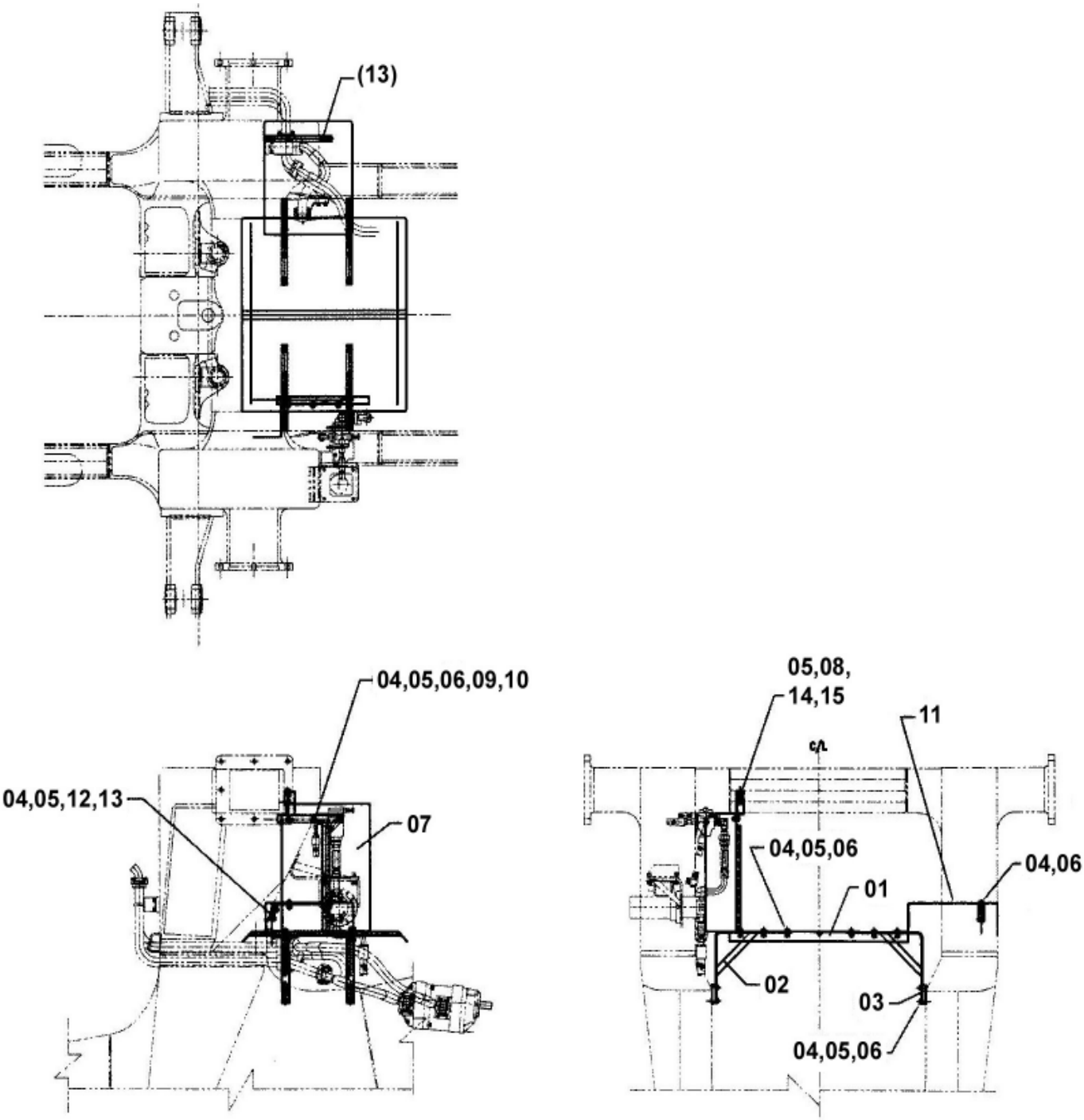

SLNO	PART NUMBER	DESCRIPTION	QTY	REMARKS
	953-FG-01049	HEAT GUARD INST.		
01	953-FG-02134	OIL SPLASH GUARD STR	1	
02	953-FG-02142	SUPPORT STR	4	
03	CPW35-12100	TAPPED PAD	4	
04	CFS01-31230	HEX. SCREW	27	
05	CFW01-11236	SPRING WASHER	15	
06	CFW02-11225	WASHER	17	
07	953-FG-02159	OIL SPLASH GUARD STR	1	
08	953-FG-12502	ANGLE, SUPPORT	1	
09	953-FG-12462	ANGLE	1	
10	CFN01-11211	HEX. NUT	3	
11	953-FG-12479	GUARD	1	
12	CPW35-12080	TAPPED PAD	1	
13	953-FG-02167	BRACKET STR	1	
14	CFW35-12070	TAPPED PAD	1	
15	CFS01-31225	HEX. SCREW	2	

FIG. 146 FUEL TANK LADDER INSTALLATION

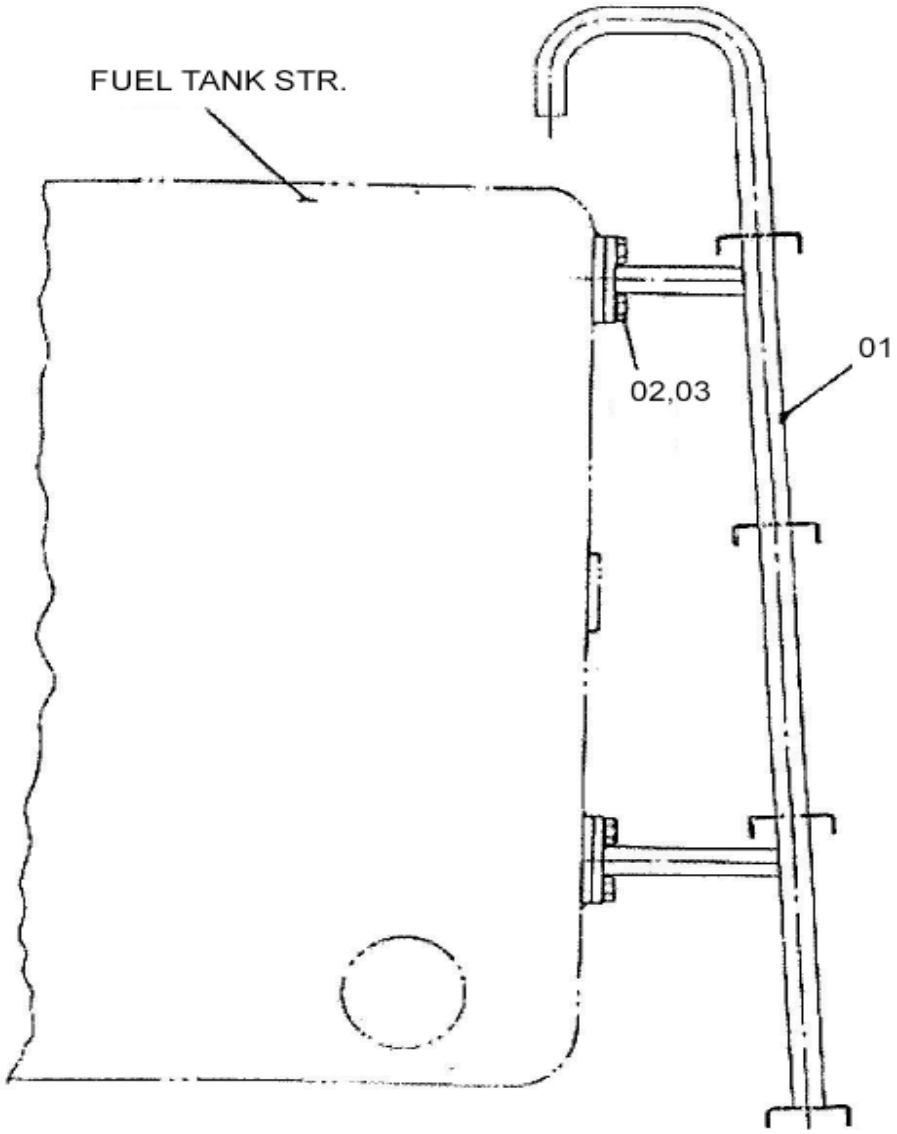

FUEL TANK LADDER INSTALLATION

FIG NO. 146

SLNO	PART NUMBER	DESCRIPTION	QTY	REMARKS
	953-FL-00023	FUEL TANK LADDER INST.		
01	985-HP-02175	STEP	1	
02	CFS01-21025	HEX. SCREW	8	
03	CFW05-11032	WASHER	8	

FIG. 147 REAR VIEW MIRROR INSTALLATION LH

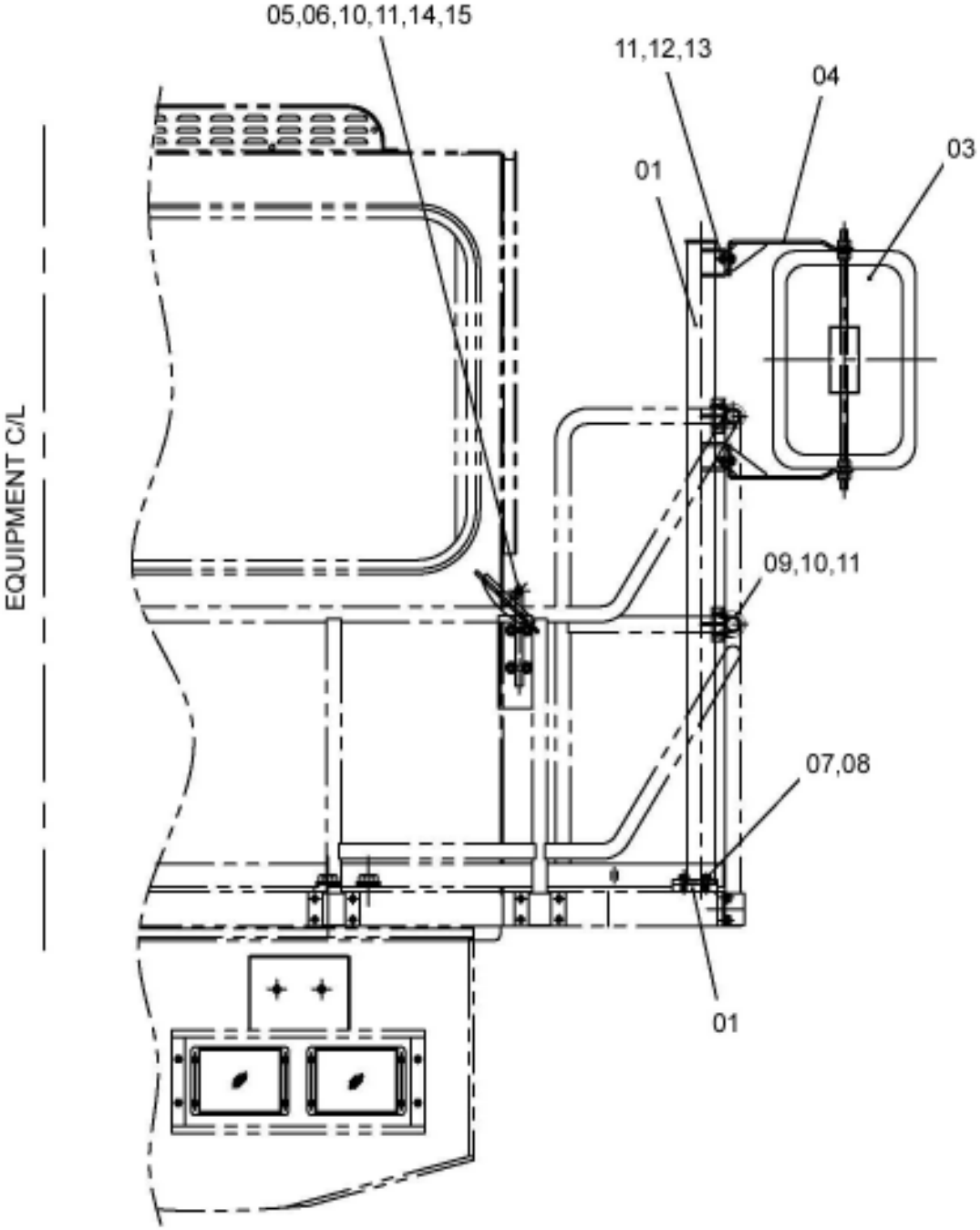

REAR VIEW MIRROR INSTALLATION LH

FIG NO. 147

SLNO	PART NUMBER	DESCRIPTION	QTY	REMARKS
	953-HP-00064	REAR VIEW MIRROR INST. LH		
01	953-HP-02268	MIRROR STAND LH	1	
02	953-HP-13421	TAPPED PAD	1	
03	649000063300	REAR VIEW MIRROR	1	
04	985-HP-02548	BRACKET	2	
05	649000078100	REAR VIEW MIRROR	1	
06	985-HP-02061	STAY	1	
07	CFS01-31225	HEX. SCREW	4	
08	CFW01-11236	WASHER, SPRING	4	
09	CCC07-23442	CLIP	2	
10	CFN28-11011	NUT, NYLOCK	8	
11	CFW05-10032	WASHER	16	
12	CFB01-11030	HEX. BOLT	4	
13	CFN01-11084	HEX. NUT	4	
14	CCC07-32232	CLIP	2	
15	CFW01-11030	WASHER, SPRING	4	
16	953-HSB-0039	KIT, MIRROR STAND	1	

VII
HYDRAULIC SYSTEM

FIG. 153 HYDRAULIC TANK ASSY. (SPLIT TYPE)

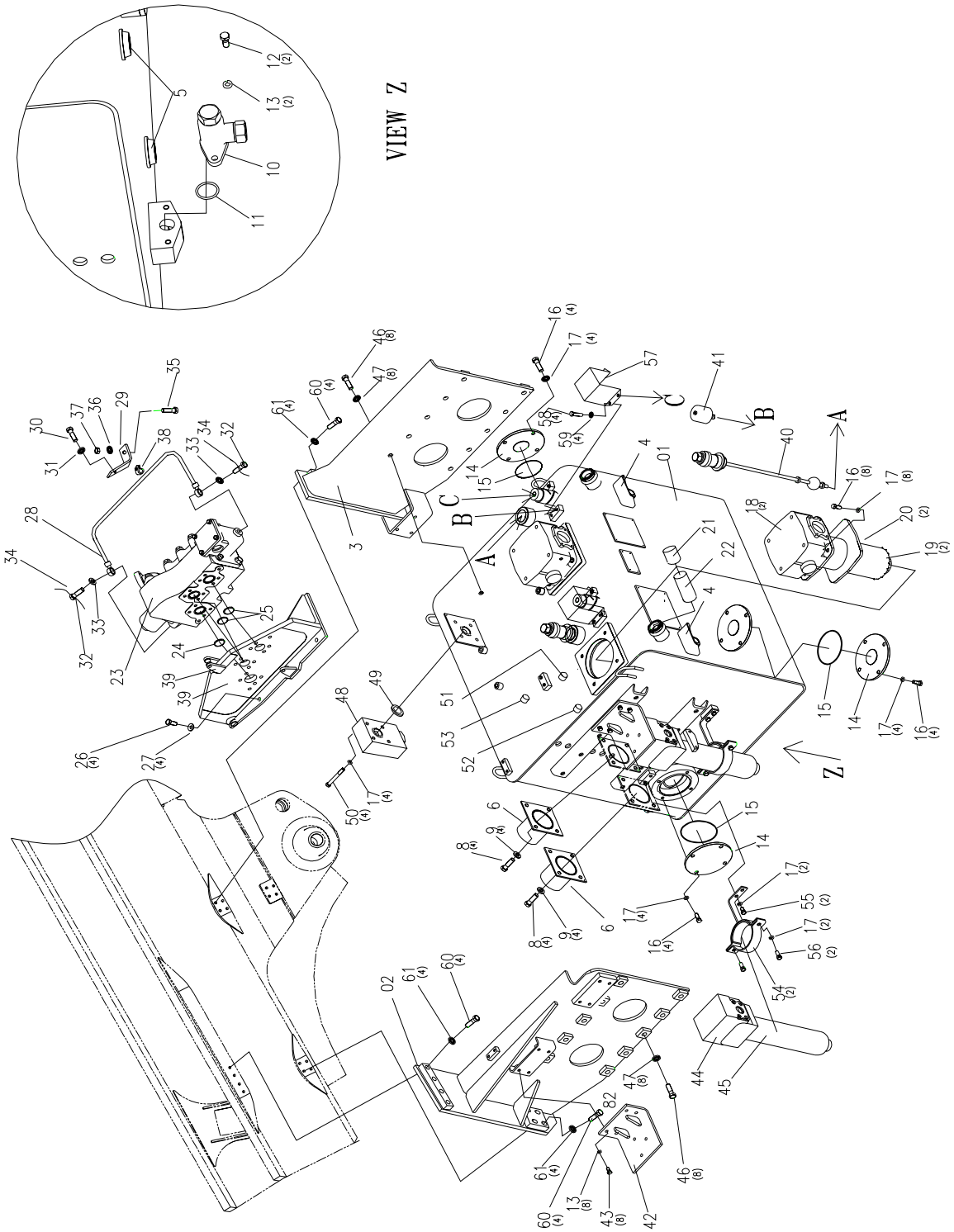

SLNO	PART NUMBER	DESCRIPTION	QTY	REMARKS
	953-PH-02066	SPLIT HYDRAULIC TANK ASSY.		
01	953-PH-03005	HYD. TANK STR	1	
02	953-PH-03013	BKT. STR. FRONT	1	
03	953-PH-03021	BKT. STR. REAR	1	
04	640000144000	GAUGE, SIGHT	2	
05	778-HS-03151	PLUG MAGNETIC	4	
06	985-PH-02524	TUBE	2	
07	CHS01-12110	O-RING	2	
08	CFB01-21650	BOLT	8	
09	CFW05-16045	WASHER	8	
10	985-CV-01048	SAMPLAMATIC VALVE	2	
11	CHS01-13035	O-RING	2	
12	CFS01-21025	SCREW	2	
13	CFW01-11030	SPRING WASHER	12	
14	985-TK-10542	COVER	4	
15	CHS01-12140	O-RING	4	
16	CFS01-31230	HEX. SCREW	30	
17	CFW01-11236	SPRING WASHER	38	
18	953-HS-02058	RETURN FILTER ASSY	1	
19	953-HS-11015	FILTER ELEMENT	2	
20	953-HS-61058	GASKET	2	
21	CCP05-00000	OIL FILLER CAP	2	
22	451-TK-11272	STRAINER	2	
23	953-HS-03012	HOIST VALVE ASSY	1	
24	CHS01-13055	O-RING	1	
25	CHS01-13045	O-RING	2	
26	CFB07-21435	BOLT	4	
27	CFW05-14045	WASHER	4	
28	953-HS-03079	TUBE	1	
29	953-PH-11187	BRACKET	1	
30	CFB01-21685	BOLT	1	
31	CFW05-16045	WASHER	1	
32	985-HS-11011	JOINT	2	
33	CHS01-12010	O-RING	2	

FIG. 153 HYDRAULIC TANK ASSY. (SPLIT TYPE)

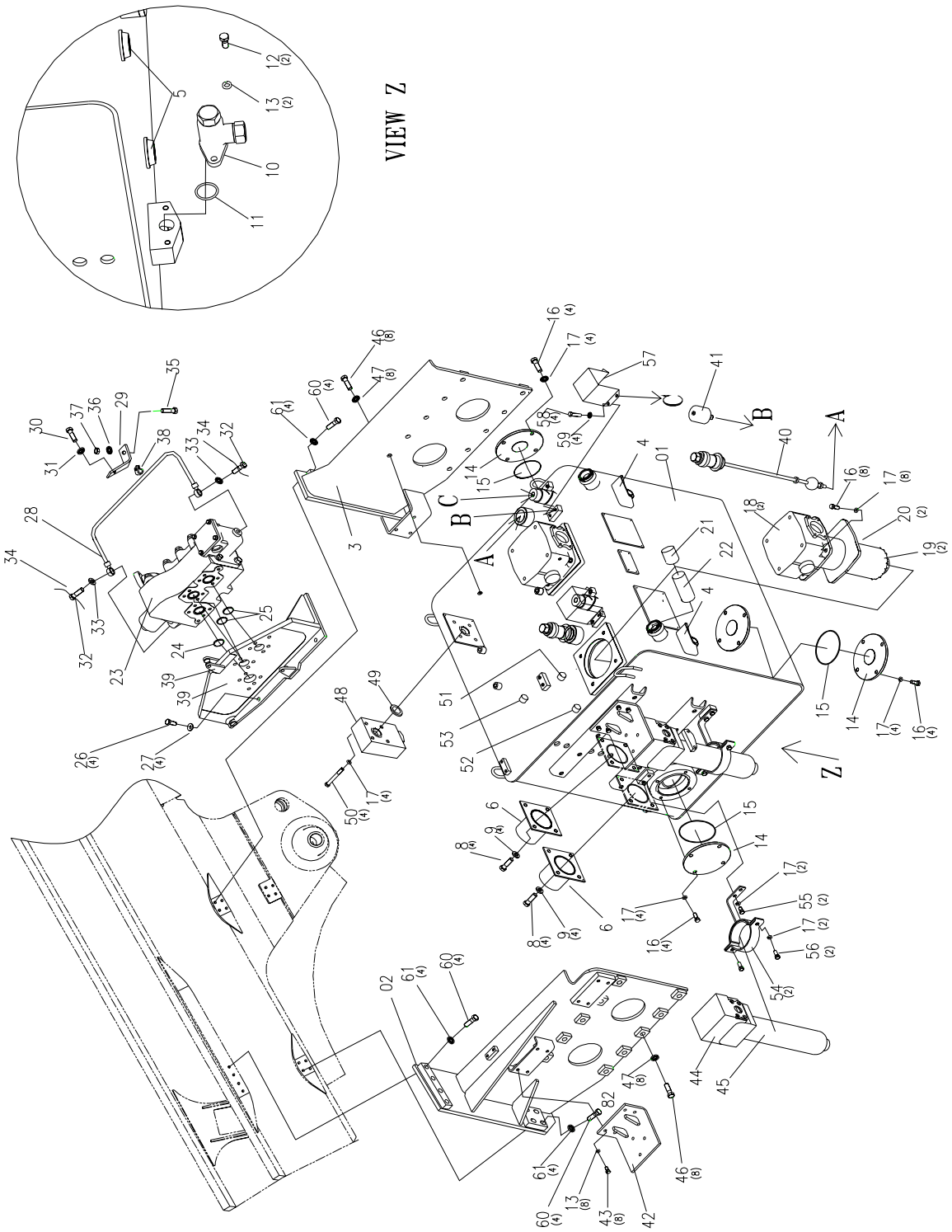

SLNO	PART NUMBER	DESCRIPTION	QTY	REMARKS
34	C1109-14016	WIRE	2	
35	CFS01-20820	SCREW	1	
36	CFW01-10825	SPRING WASHER	1	
37	CFN01-20868	NUT	1	
38	CCC06-01208	CLIP	1	
39	953-PH-03087	BRACKET	1	
40	985-TK-02037	OIL LEVER SENSOR	2	
41	985-TK-02053	BREATHER ASSY	2	
42	953-HS-03053	BRACKET ASSY	2	
43	CFS01-21020	SCREW	8	
44	953-HS-02073	FILTER ASSY	2	
45	953-HS-11023	FILTER ELEMENT	2	
46	CFB01-21665	BOLT	20	
47	CFW05-16045	WASHER	20	
48	985-TK-02224	VALVE ASSY	1	
49	CHS01-13048	O-RING	1	
50	CFB02-21200	BOLT	4	
51	CPL01-10312	PLUG	1	
52	CPL01-10211	PLUG	1	
53	CPL01-10415	PLUG	1	
54	953-PH-03054	CLAMP ASSY	2	
55	CFB01-11220	BOLT	4	
56	CFB01-11230	BOLT	4	
57	787-HS-02802	PROTECTIVE COVER	2	
58	CFS01-20816	HEX. SCREW	4	
59	CFW01-10825	WASHER SPRING	4	
60	955-ZZ-10383	NIPPLE (QUICK COUPLING)	1	
61	953-PH-03046	BOC RETURN LINE FILTER	1	
	953-SK-00046	REPAIR KIT		

FIG. 153-A HYDRAULIC TANK ASSY.

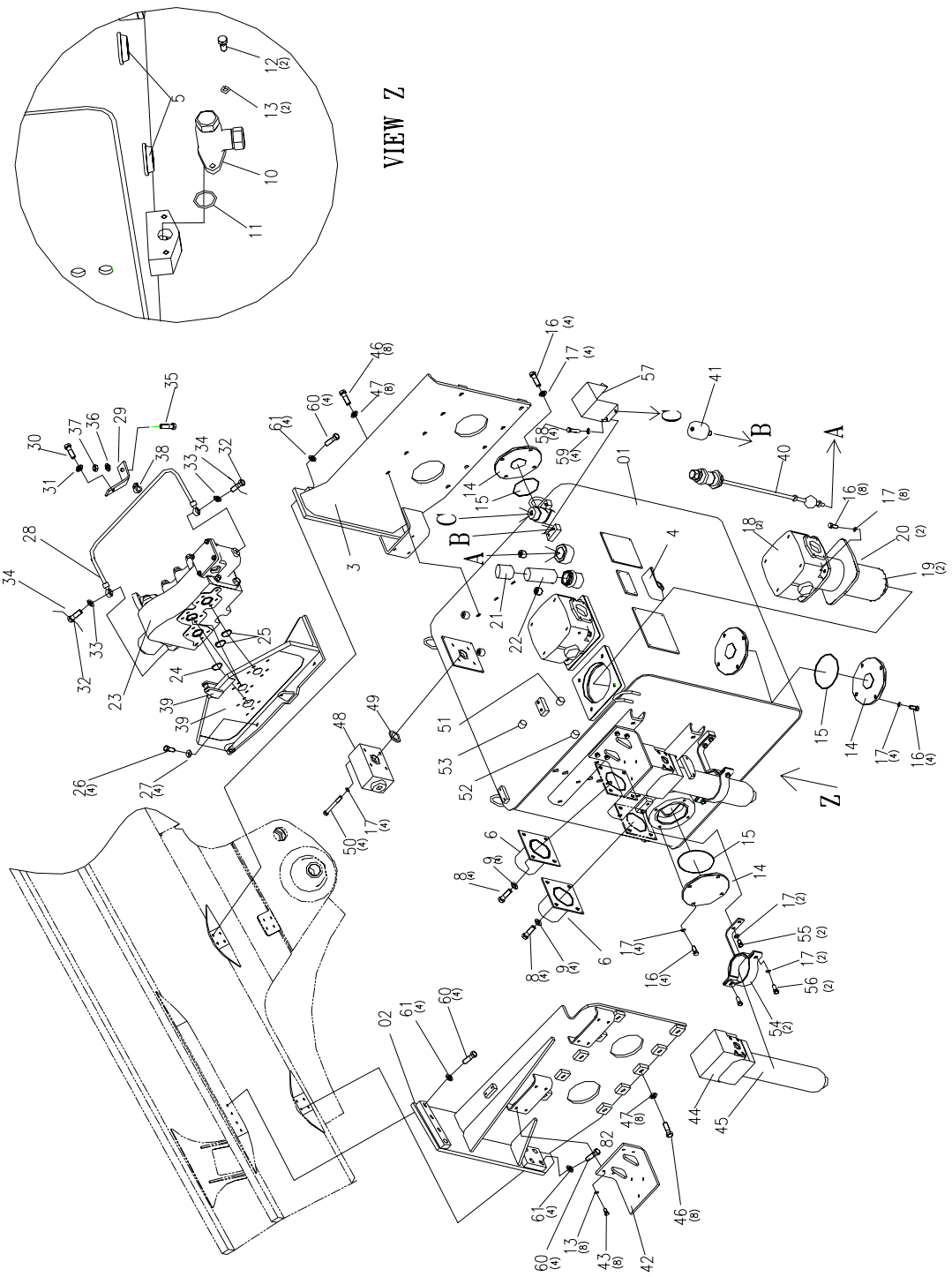

SLNO	PART NUMBER	DESCRIPTION	QTY	REMARKS
	953 HS 02081	HYDRAULIC TANK ASSEMBLY		
1	953 HS 03029	HYD. TANK STR	1	
2	953 HS 03037	BKT. STR. FRONT	1	
3	953 HS 03045	BKT. STR. REAR	1	
4	640000144006	GAUGE,SIGHT	1	
5	778 HS 03151	PLUG MAGNETIC	3	
6	985 PH 02524	TUBE	2	
7	CHS01 11210	O-RING	2	
8	CFB01 21650	BOLT M16	8	
9	CFW05 16045	WASHER,M16	8	
10	985 CV 01048	SAMPLAMATIC VALVE	1	
11	CHS01 13035	O-RING	1	
12	CFS01 21025	SCREW	2	
13	CFW01 11030	WASHER	10	
14	985 TK 10542	COVER	3	
15	CHS01 12140	O-RING	3	
16	CFS01 31230	SCREW	26	
17	CFW01 11236	WASHER	38	
18	953 HS 02058	RETURN FILTER ASSY	2	
19	953 HS 11015	FILTER ELEMENT	2	
20	953 HS 61058	GASKET	2	
21	CCP05 00000	OIL FILLER CAP	1	
22	451 TK 11272	STRAINER	1	
23	953 HS 03012	HOIST VALVE ASSY	1	
24	CHS01 13055	O-RING	1	
25	CHS01 13045	O-RING	2	
26	CFB07 21435	BOLT	4	
27	CFW05 14045	WASHER	4	
28	985 HS 02078	TUBE	1	
29	985 HS 11036	BRACKET	1	
30	CFB01 21685	BOLT	1	
31	CFW05 16045	WASHER	1	
32	985 HS 11011	JOINT	2	
33	CHS01 12010	O-RING	2	

FIG. 153-A HYDRAULIC TANK ASSY.

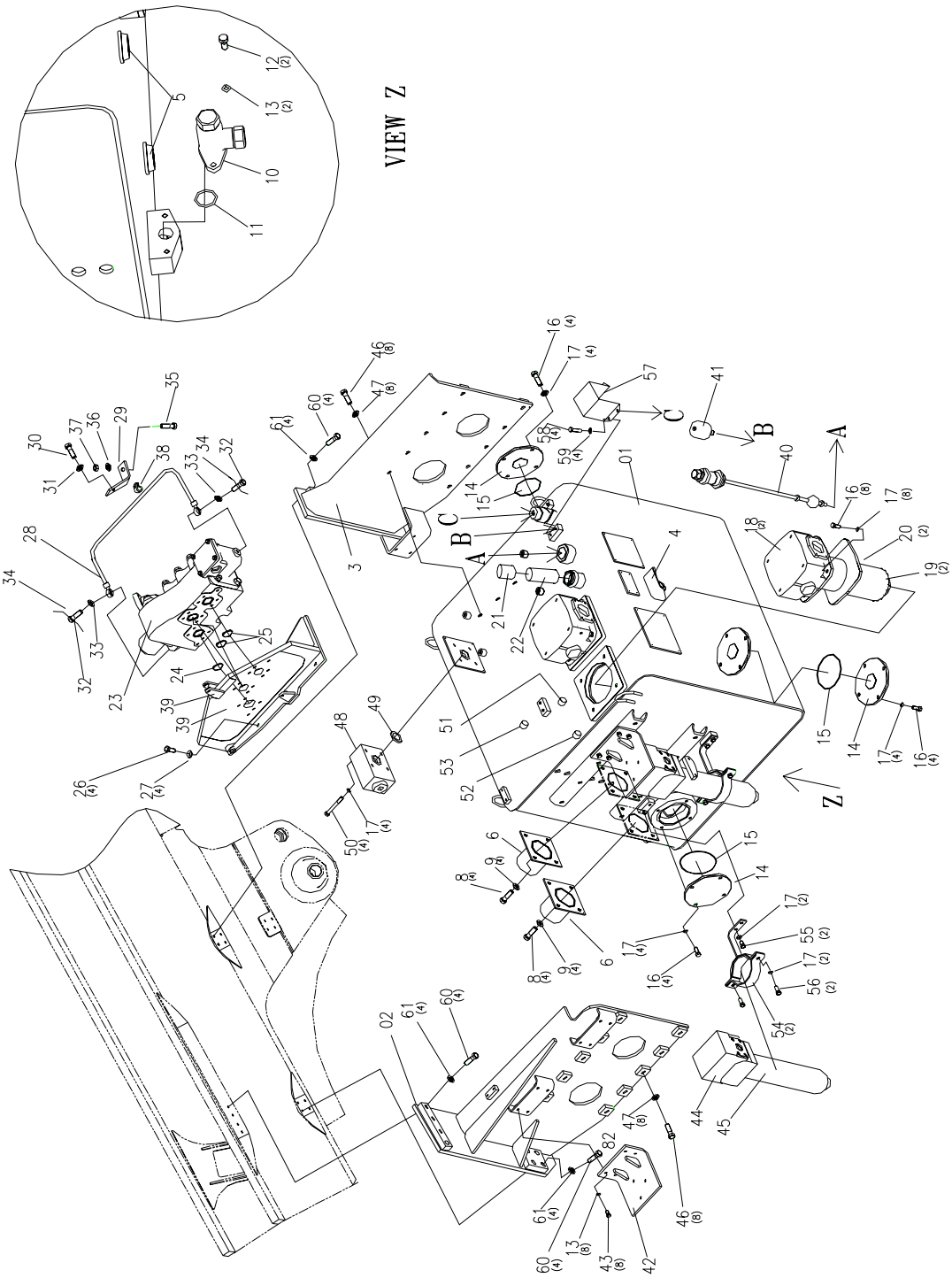

SLNO	PART NUMBER	DESCRIPTION	QTY	REMARKS
34	C1109 14016	WIRE	2	
35	CFS01 20820	SCREW	1	
36	CFW01 10825	SPRING WASHER	1	
37	CFN01 20868	NUT	1	
38	CCC06 01208	CLIP	1	
39	985 HS 02029	BRACKET	1	
40	985 TK 02037	OIL LEVER SENSOR	1	
41	985 TK 02053	BREATHER ASSY	2	
42	953 HS 03053	BRACKET ASSY	2	
43	CFS01 21020	SCREW	8	
44	953 HS 02073	FILTER ASSY	2	
45	953 HS 11023	FILTER ELEMENT	2	
46	CFB01 21655	BOLT	20	
47	CFW05 16045	WASHER	20	
48	985 TK 02224	VALVE ASSY	1	
49	CHS01 13048	O-RING	1	
50	CFB02 21200	BOLT	4	
51	CPL01 10312	PLUG	1	
52	CPL01 10211	PLUG	1	
53	CPL01 10415	PLUG	1	
54	953 HS 02721	CLA MP	2	
55	CFB01 11220	BOLT	4	
56	CFB01 11230	BOLT	4	
57	787 HS 02802	PROTECTIVE COVER	1	
58	CFS01 20816	HEX SCREW	4	
59	CFW01 10825	WASHER SPRING	4	
	953 SK 00046	REPAIR KIT		

FIG. 154 HOIST VALVE ASSY.

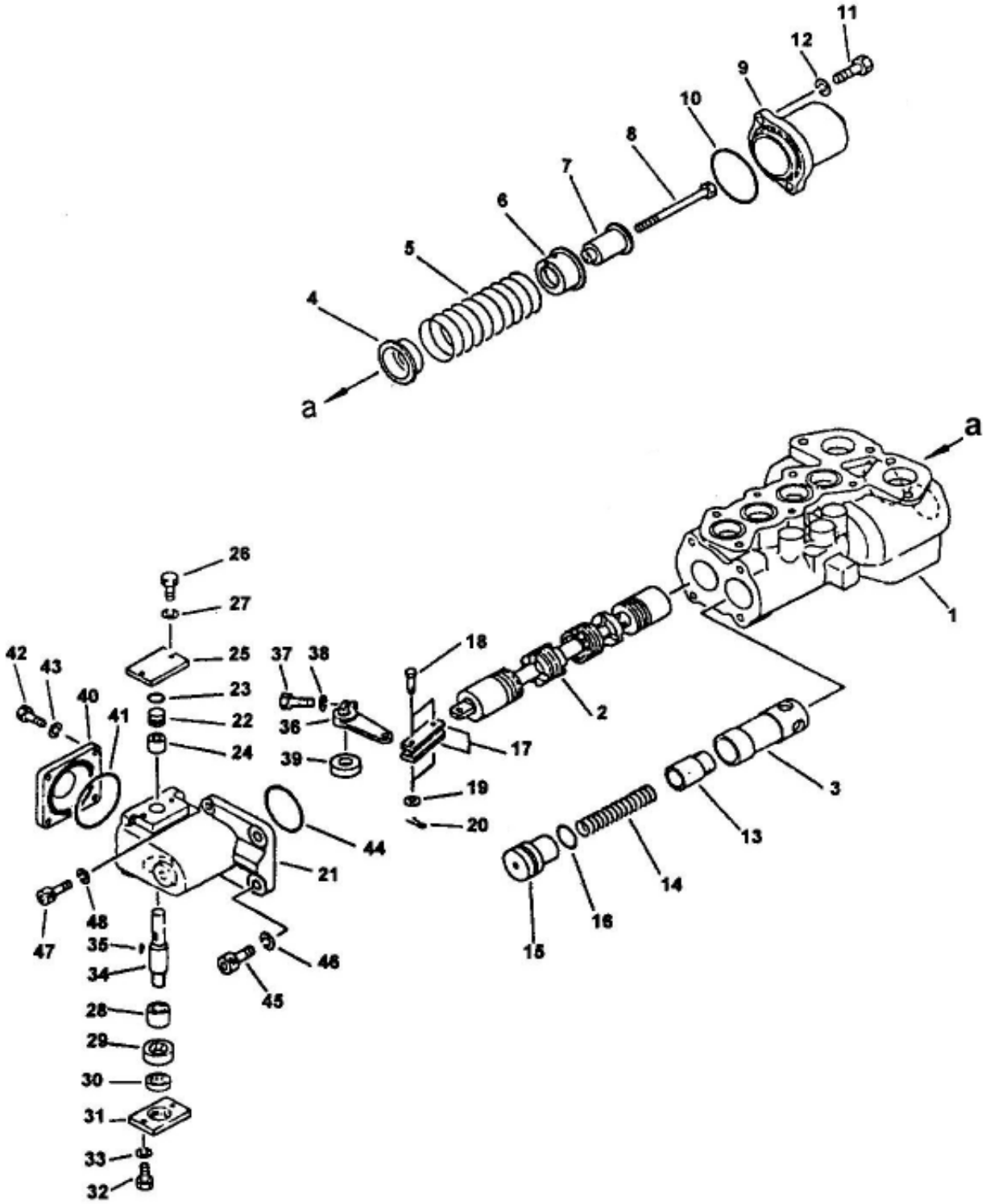

SLNO	PART NUMBER		DESCRIPTION	QTY	REMARKS
	953-HS-03012		HOIST VALVE ASSY	1	
	701-51-42001	*	HOIST VALVE SUB ASSY	1	
	701-51-00050	**	BODY ASSY	1	
01	701-51-35110	***	BODY VALVE	1	
02	701-53-33350	***	SPOOL	1	
03	701-51-32120	***	COLLAR	1	
04	701-53-33360	**	SPACER	1	
05	701-51-33190	**	SPRING	1	
06	701-51-31210	**	SPACER	1	
07	701-51-35150	**	COLLAR	1	
08	01010-51290	**	BOLT	1	
09	701-51-35140	**	CASE	1	
10	07000-02090	**	O-RING	1	
11	01010-51235	**	BOLT	2	
12	01602-21236	**	WASHER,SPRING	2	
13	701-53-31120	**	VALVE	1	
14	701-53-31130	**	SPRING	1	
15	701-51-32130	**	SEAT	1	
16	07000-13045	**	O-RING	1	
17	141-60-32170	**	YOKE	2	
18	04205-01028	**	PIN	2	
19	01641-21016	**	WASHER	2	
20	04050-03015	**	PIN,COTTER	2	
21	701-51-35120	**	CASE	1	
22	701-51-32240	**	SEAT	1	
23	07000-02020	**	O-RING	1	
24	06120-02016	**	BEARING	1	
25	701-51-32250	**	PLATE	1	
26	01010-50820	**	BOLT	2	
27	01602-20825	**	WASHER,SPRING	2	
28	06120-02520	**	BEARING	1	
29	07430-11260	**	SEAL OIL	1	
30	07016-10256	**	SEAL DUST	1	
31	375-VL-11278	**	PLATE	1	
32	01010-50820	**	BOLT	2	
33	01602-20825	**	WASHER,SPRING	2	
34	701-51-32160	**	SHAFT	1	

FIG. 154 HOIST VALVE ASSY.

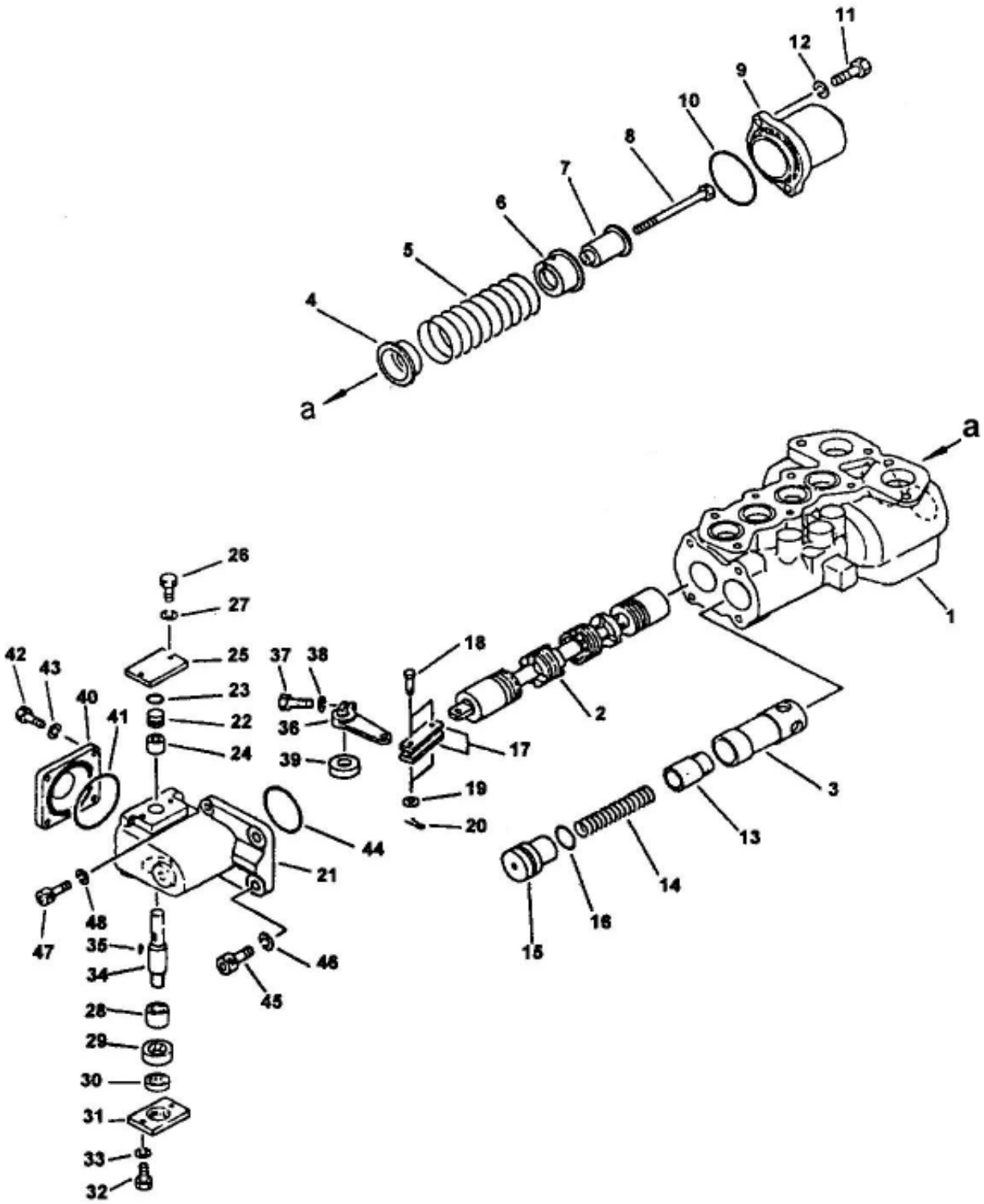

SLNO	PART NUMBER	DESCRIPTION	QTY	REMARKS
35	04010-60519	** KEY	1	
36	701-51-35130	** LEVER	1	
37	01010-50830	** BOLT	1	
38	01602-20825	** WASHER,SPRING	1	
39	701-51-32270	** SPACER	1	
40	701-51-32190	** COVER	1	
41	07000-02090	** O-RING	1	
42	01010-51030	** BOLT	4	
43	01602-21030	** WASHER,SPRING	4	
44	07000-02075	** O-RING	1	
45	01252-31645	** BOLT	2	
46	01602-21648	** WASHER,SPRING	2	
47	01252-31240	** BOLT	2	
48	01602-21236	** WASHER,SPRING	2	
	985-SK-01444	SERVICE KIT		

FIG. 155 HOIST VALVE ASSY.

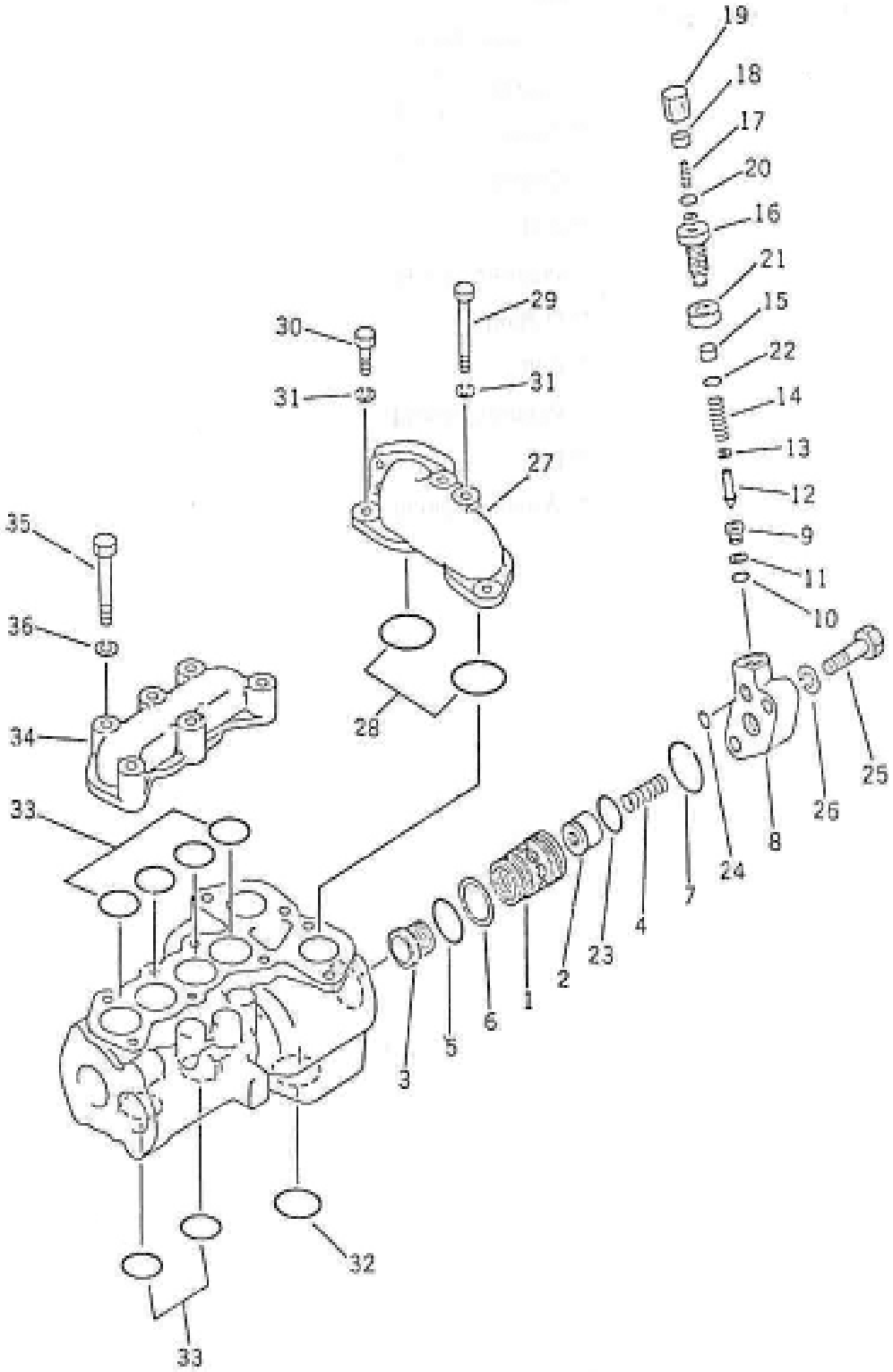

SLNO	PART NUMBER		DESCRIPTION	QTY	REMARKS
	953-HS-03012		HOIST VALVE ASSY	1	
	701-51-42001	*	HOIST VALVE SUB ASSY	1	
	701-51-00040	**	SLEEVE ASSY	1	
01	701-51-35180	***	SLEEVE	1	
02	701-50-51111	***	VALVE	1	
03	701-53-33290	**	PLUG	1	
04	701-30-51130	**	SPRING	1	
05	07000-13045	**	O-RING	1	
06	07001-03045	**	RING BACK-UP	1	
07	07000-02055	**	O-RING	1	
08	701-51-35160	**	BODY	1	
09	375-CV-11798	**	SEAT	1	
10	07000-12012	**	O-RING	1	
11	07001-02012	**	RING,BACK-UP	1	
12	375-CV-11862	**	POPPET	1	
13	375-CV-11838	**	SPACER	1	
14	375-CV-11751	**	SPRING	1	
15	375-CV-11821	**	RETAINER	1	
16	700-80-51160	**	HOLDER	1	
17	375-CV-11749	**	SCREW	1	
18	01580-10605	**	NUT	1	
19	375-CV-11757	**	COVER	1	
20	07002-01423	**	O-RING	1	
21	07239-12410	**	NUT	1	
22	07002-02434	**	O-RING	1	
23	07000-13045	**	O-RING	1	
24	07000-02015	**	O-RING	1	
25	01010-51650	**	BOLT	2	
26	01602-21648	**	WASHER,SPRING	2	
27	701-51-35170	**	TUBE	1	
28	07000-02065	**	O-RING	2	
29	01011-51610	**	BOLT	2	
30	01010-51645	**	BOLT	2	
31	01602-21648	**	WASHER,SPRING	4	
32	07000-13055	**	O-RING	1	
33	07000-13045	**	O-RING	6	
34	701-51-33290	*	COVER	1	

FIG. 155 HOIST VALVE ASSY.

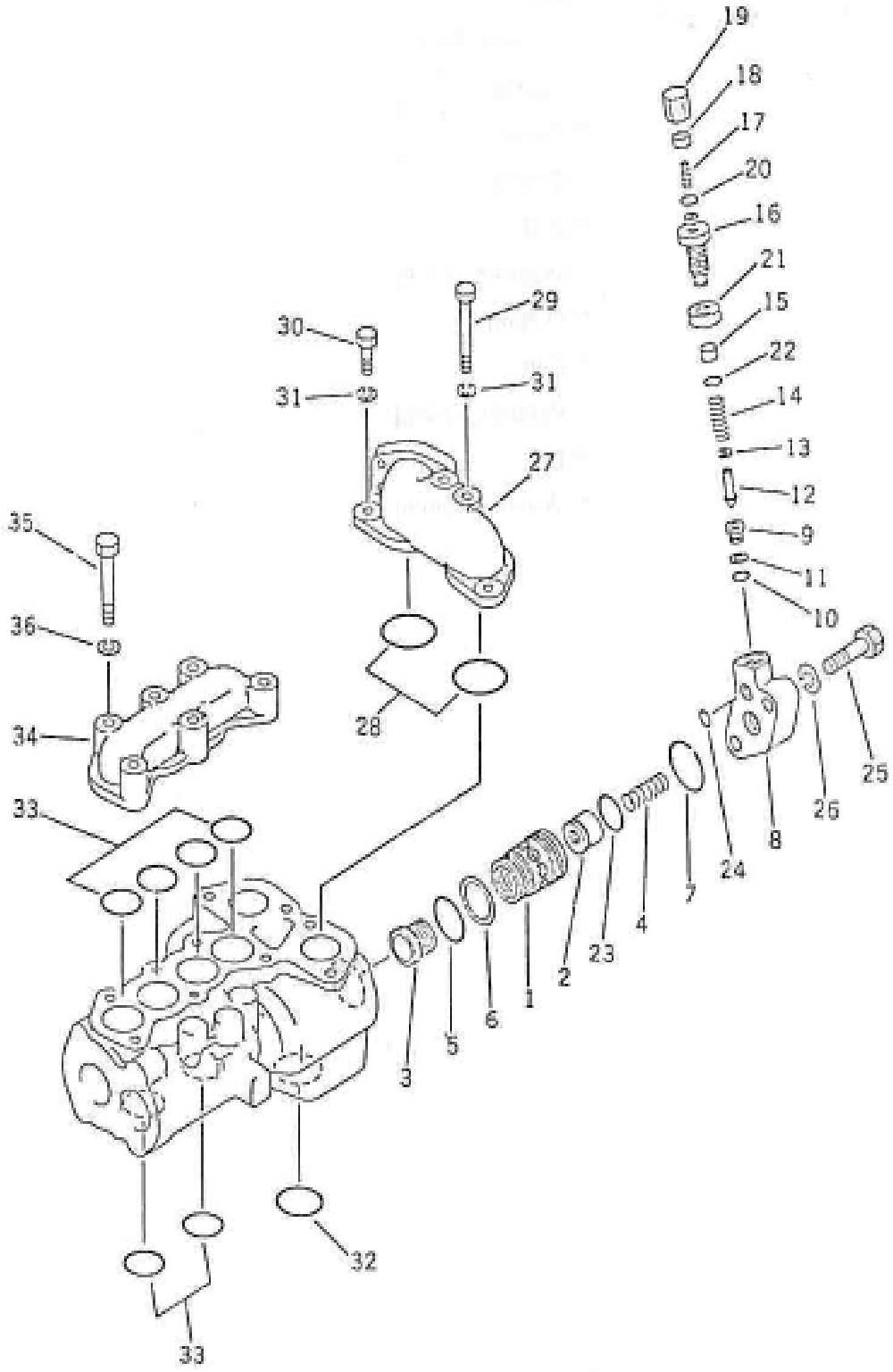

SLNO	PART NUMBER	DESCRIPTION	QTY	REMARKS
35	01010-51675	* BOLT	6	
36	01602-21648	* WASHER,SPRING	6	
	985-SK-01444	SERVICE KIT		

FIG. 156 HOIST CYLINDER ASSY.

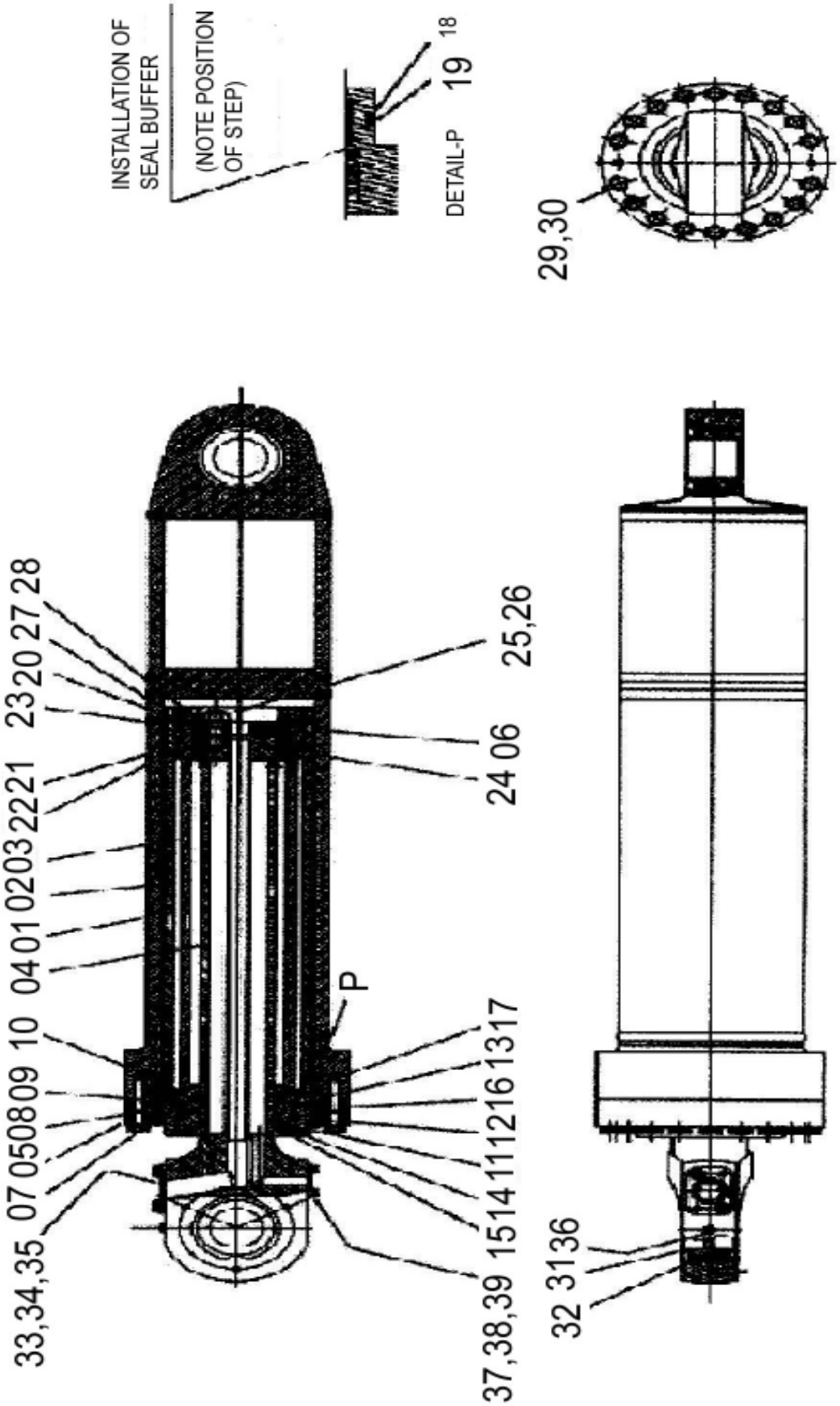

HOIST CYLINDER ASSY.

FIG NO. 156

SLNO	PART NUMBER	DESCRIPTION	QTY	REMARKS
	953-HC-01017	HOIST CYLINER ASSY	2	
01	953-HC-02021	OUTER TUBE ASSY	1	
02	953-HC02038	CYLINDER ASSY-I	1	
03	953-HC-02046	CYLINDER ASSY-II	1	
04	561-63-22620	ROD PISTOR	1	
05	953-HC-51068	HEAD CYLINDER	1	
06	640000452500	PISTON	1	
07	PB 6554	WIPER, ROD (KIT)	1	
08	PB 6553	SEAL, ROD (KIT)	1	
09	PB 6552	SEAL RUBBER (KIT)	1	
10	PB 6551	BEARING (KIT)	1	
11	VA 3216	WIPER, ROD (KIT)	1	
12	VA 3219	SEAL, ROD (KIT)	1	
13	VA 3213	BEARING (KIT)	1	
14	198-63-94170	DUST SEAL (KIT)	1	
15	CFL10-00135	SNAP RING (KIT)	1	
16	07177-01140	BUSHING (KIT)	1	
17	707-51-11110	PACKING, ROD (KIT)	1	
18	07000-15240	O-RING (KIT)	1	
19	CHS02-05240	BACKUP RING (KIT)	1	
20	953-HC-91293	RING, WEAR (KIT)	3	
21	PB 7325	BEARING (KIT)	2	
22	155-HC-99216	PISTON SEAL (KIT)	1	
23	07155-01435	WEAR RING (KIT)	1	
24	640000452600	O-RING (KIT)	1	
25	01124-82255	STUD	5	
26	CFN44-12224	HEX. NUT (KIT)	5	
27	935-HC-11234	SNAP RING-1	1	
28	561-63-22780	SNAP RING	1	
29	CFB01-21690	HEX. BOLT	18	
30	CFW01-11648	WASHER, SPRING	18	
31	566-63-22880	SPHERICAL BEARING	2	
32	CFL04-10130	CIRCLIP, INTERNAL	2	
33	CFS01-11220	HEX. SCREW	2	
34	07000-13048	O-RING	1	
35	953-HC-11256	DUMMY, FLANGE	1	

FIG. 156 HOIST CYLINDER ASSY.

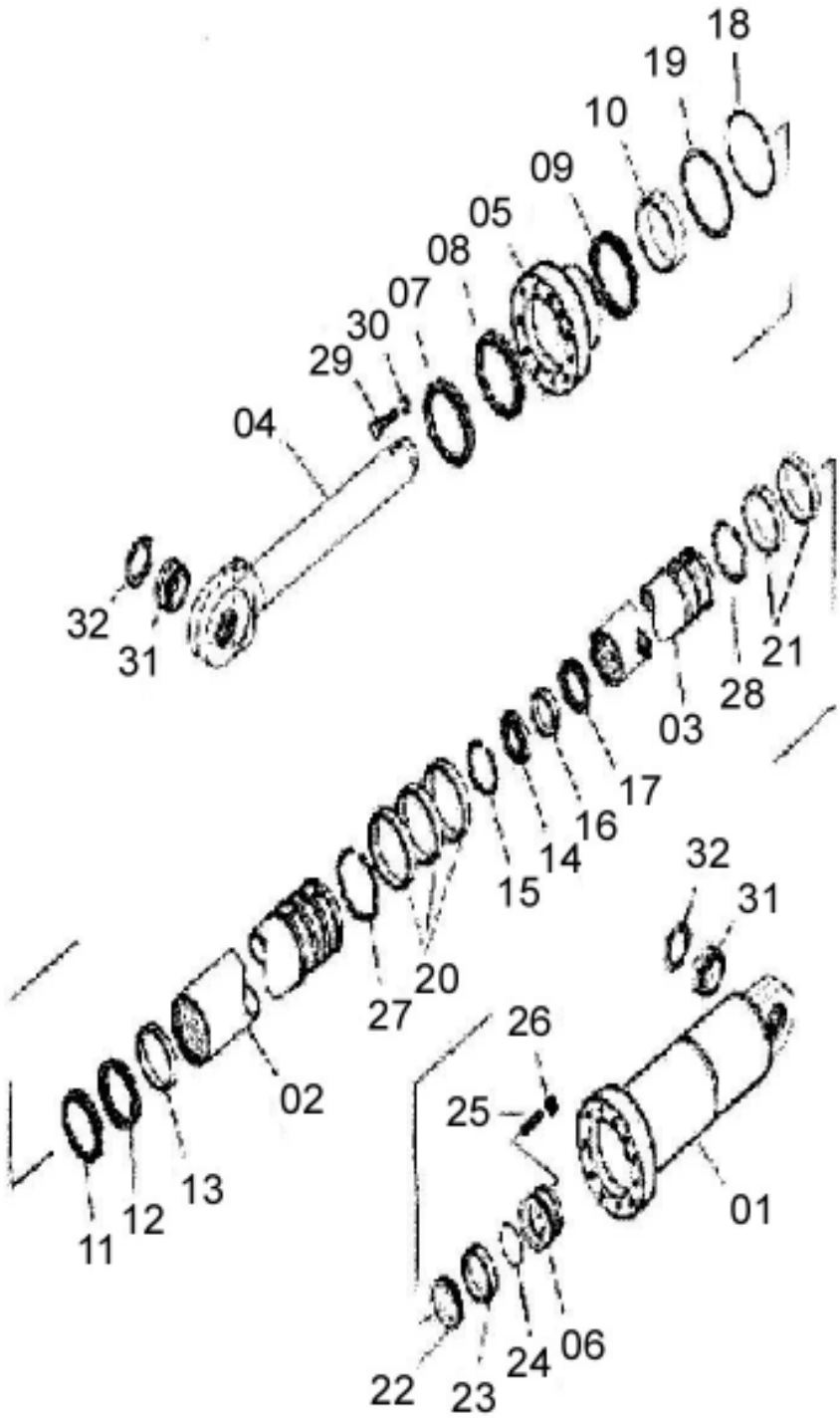

SLNO	PART NUMBER	DESCRIPTION	QTY	REMARKS
36	C3001-01640	PLUG	1	
37	953-HC-11264	DUMMY, FLANGE	1	
38	07000-13025	O-RING	1	
39	CFS01-10820	HEX. SCREW	2	
	953-HC-00012	SEAL KIT	1	

FIG. 157 HIGH PRESSURE FILTER ASSY.

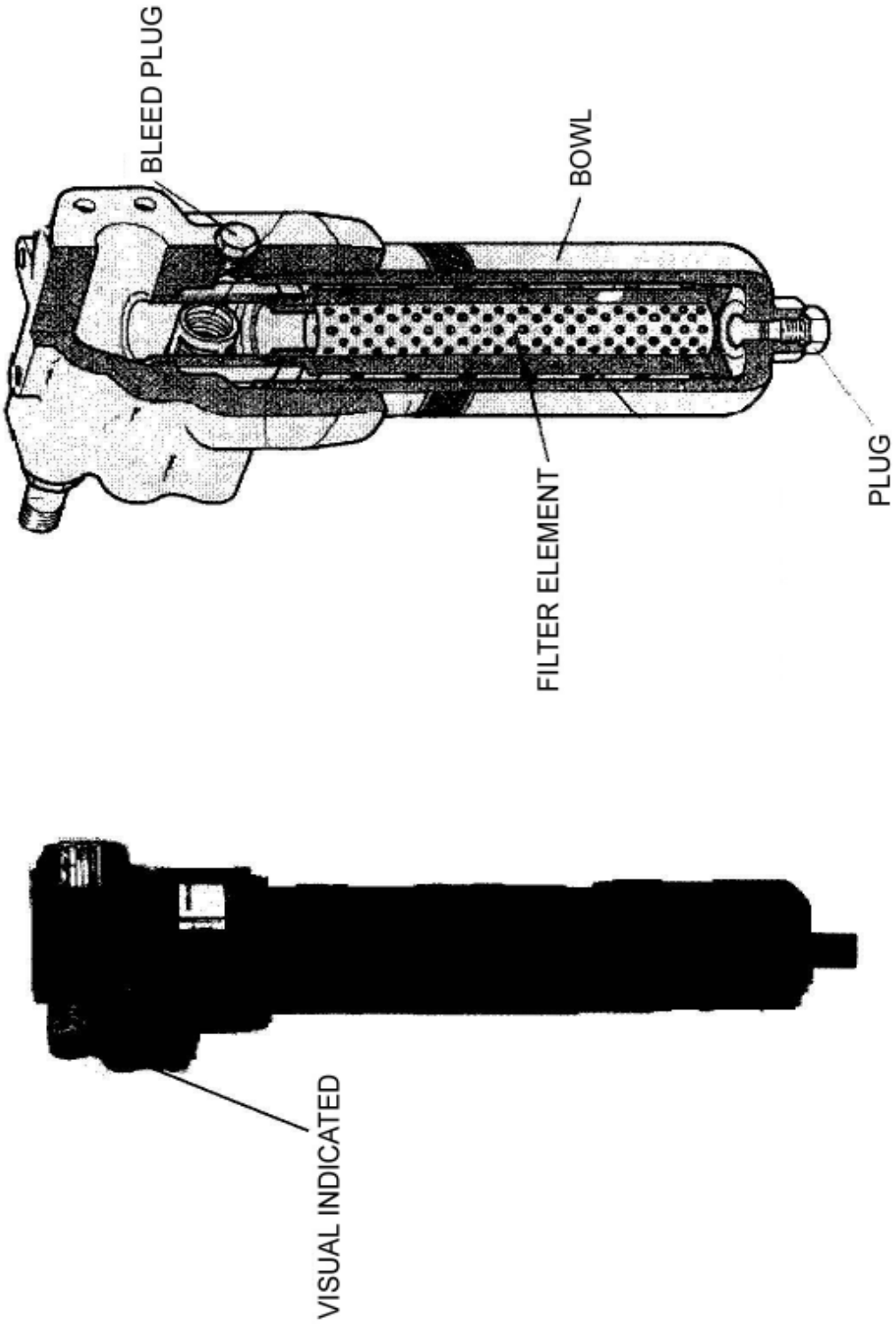

HIGH PRESSURE FILTER ASSY.

FIG NO. 157

SLNO	PART NUMBER	DESCRIPTION	QTY	REMARKS
	953-HS-02073	FILTER ASSY		
01	953-HS-11023	FILTER ELEMENT	2	
	953-SK-00012	SEAL KIT		

FIG. 158 COLUMN ASSY., STUB

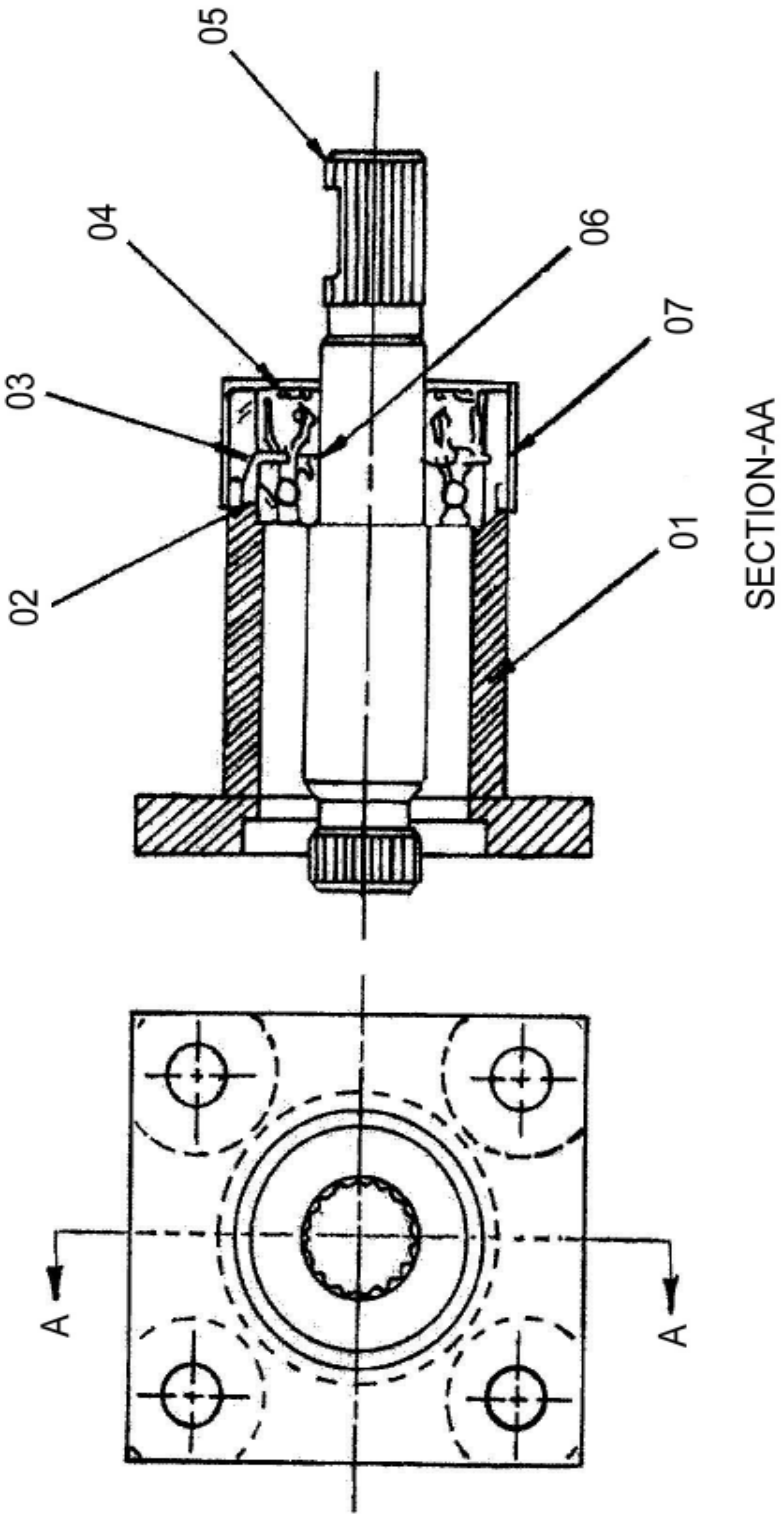

SLNO	PART NUMBER	DESCRIPTION	QTY	REMARKS
	565410150000	COLUMN ASSY, STUB		
01	565410160000	HOUSING STR	1	
02	565410150130	BEARING, BALL	1	
03	CFL01-12012	CIRCLIP, EXTERNAL	1	
04	565410150260	SEALOIL, RADIAL LIP-TYPE	1	
05	565410150330	SHAFT	1	
06	CFL02-14218	CIRCLIP, INTERNAL	1	
07	565410150460	BOOT		

FIG. 159 DUAL RELIEF VALVE

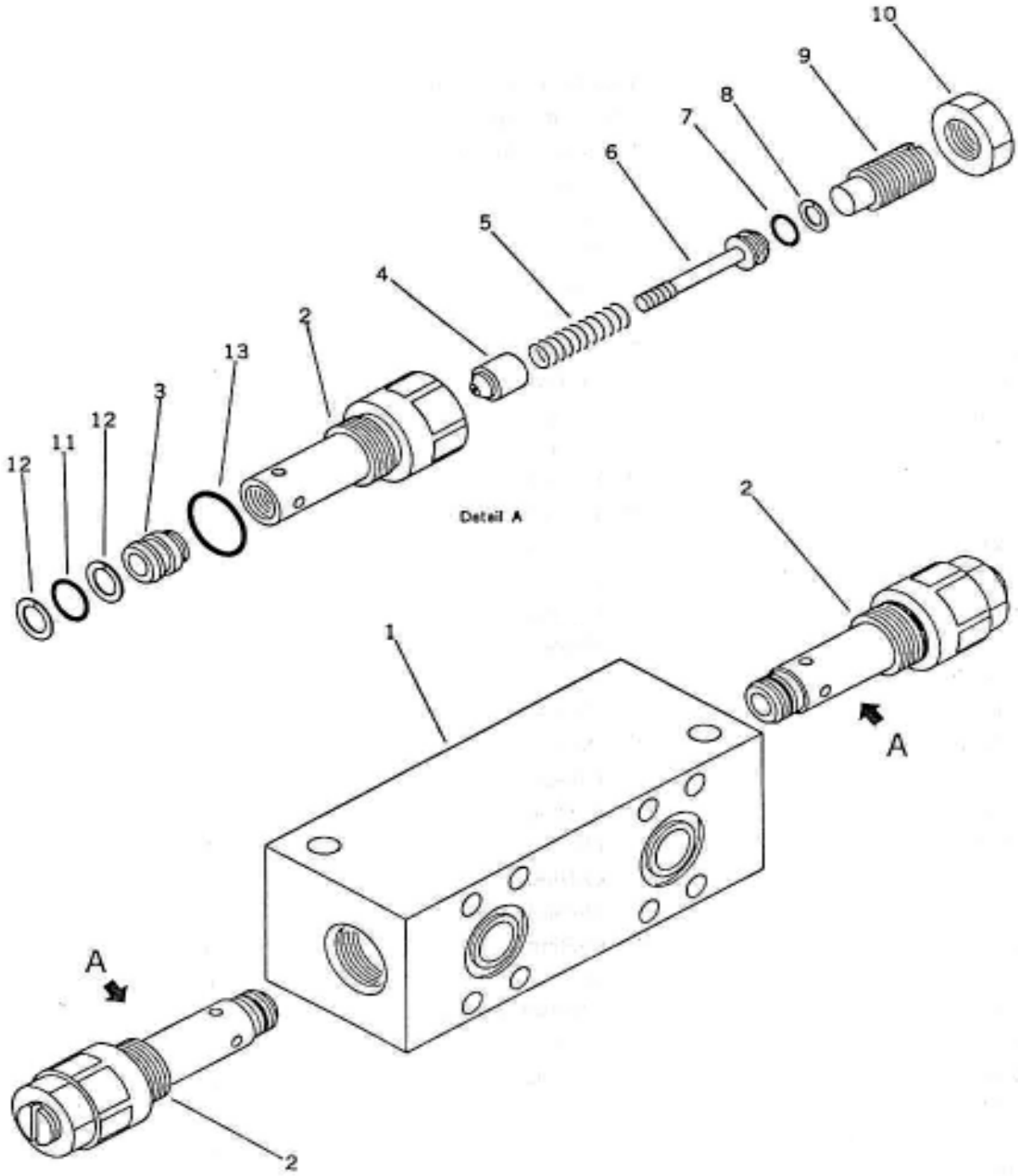

SLNO	PART NUMBER		DESCRIPTION	QTY	REMARKS
	985-PH-02687		CROSS OVER R. VALVE ASSY	1	
01	985-PH-13013	*	BODY VALVE	1	
02	985-PH-13038		SLEEVE	1	
03	985-PH-03034	*	RELIEF VALVE ASSY	2	
04	985-PH-13046		SEAT VALVE	1	
05	985-PH-13021		VALVE	1	
06	985-PH-13079		SPRING	1	
07	985-PH-13054		PISTON	1	
08	CHS01-12012		O-RING	1	
09	CHS02-12012		RING BACK UP	1	
10	985-PH-13062		SCREW	1	
11	CFN19-32016		NUT	1	
12	CHS01-22016	**	O-RING	1	
13	CHS02-12016	**	RING BACK-UP	2	
14	CHS03-13034	**	O-RING	1	

FIG. 160 RETURN LINE FILTER ASSY.

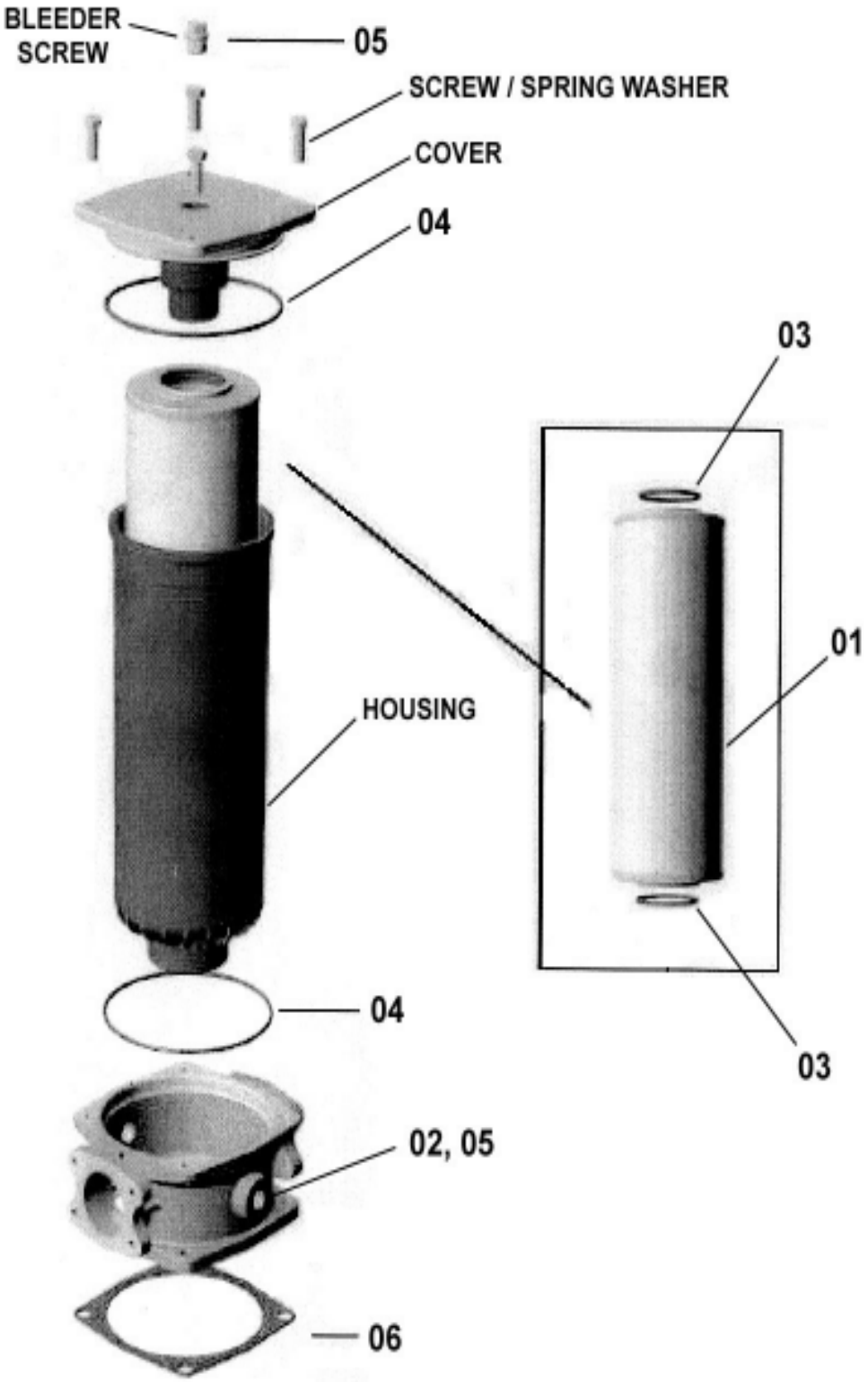

RETURN LINE FILTER ASSY.

FIG NO. 160

SLNO	PART NUMBER	DESCRIPTION	QTY	REMARKS
	953-HS-02058	RETURN LINE FILTER ASSY		
01	953-HS-11015	FILTER ELEMENT	1	
02	953-PH-11146	COLOGGING INDICATOR	1	
03	953-HS-62979	O-RING (ELEMENT)	2	
04	953-HS-62987	O-RING (HEAD)	2	
05	953-HS-63001	O-RING	2	
06	953-HS-63034	GASKET	1	
	953-HS-00046	REPAIR KIT		

FIG. 161 STEERING CYLINDER ASSY.

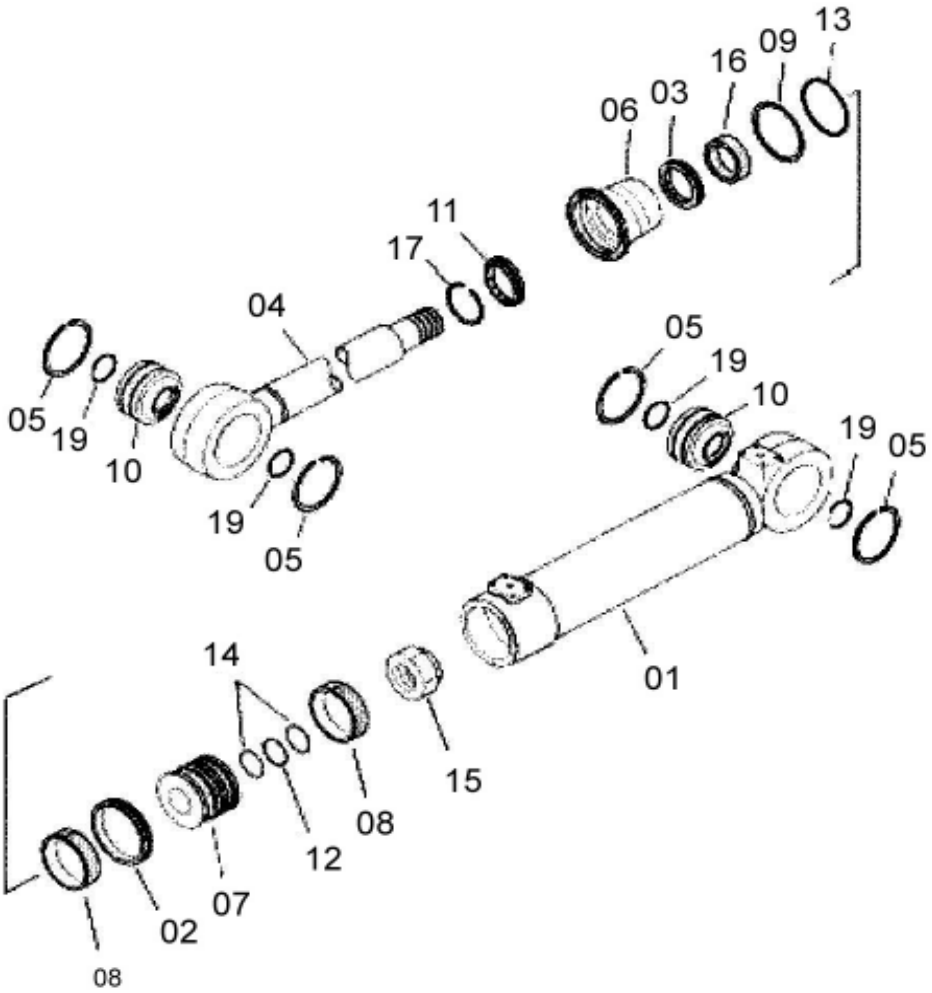

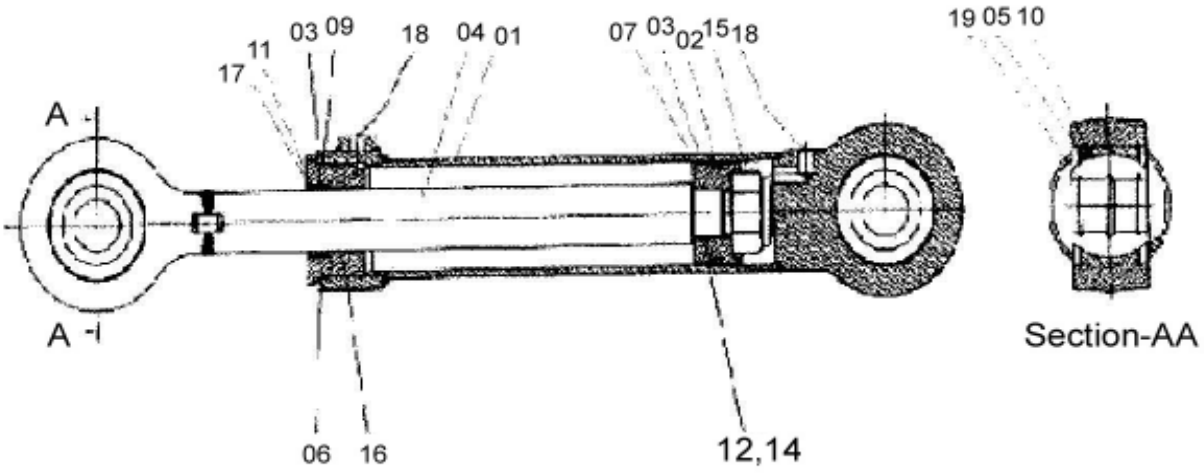

STEERING CYLINDER ASSY.

FIG NO. 161

SLNO	PART NUMBER	DESCRIPTION	QTY	REMARKS
	953-HC-01009	STEERING CYLINDER ASSY	1	
01	953-HC-02005	CYLINDER	1	
02	375-HC-02018	RING PISTON (KIT)	1	
03	375-HC-02026	PACKING ROD (KIT)	1	
04	985-HC-61076	ROD, PISTON ASSY	1	
05	CFL04-10135	CIRCLIP	4	
06	375-HC-19004	HEAD CYLINDER	1	
07	375-HC-11552	PISTON	1	
08	375-HC-71014	RING, WEAR (KIT)	2	
09	375-HC-71096	BACKUP RING (KIT)	1	
10	07137-06010	SPH. BEARING	2	
11	707-56-70580	SEAL DUST (KIT)	1	
12	07000-12055	O-RING (KIT)	1	
13	07000-12125	O-RING (KIT)	1	
14	07001-02055	BACKUP RING (KIT)	2	
15	07165-15252	NYLOCK NUT (KIT)	1	
16	07177-07030	BUSHING	1	
17	07179-00093	SNAP RING (KIT)	1	
18	CHC01-08048	PLUG	2	
19	07000-02060	O-RING (KIT)	4	
	953-HC-00029	SEAL KIT	1	

FIG. 162 HYDRAULIC PUMP ASSY. (1/2)

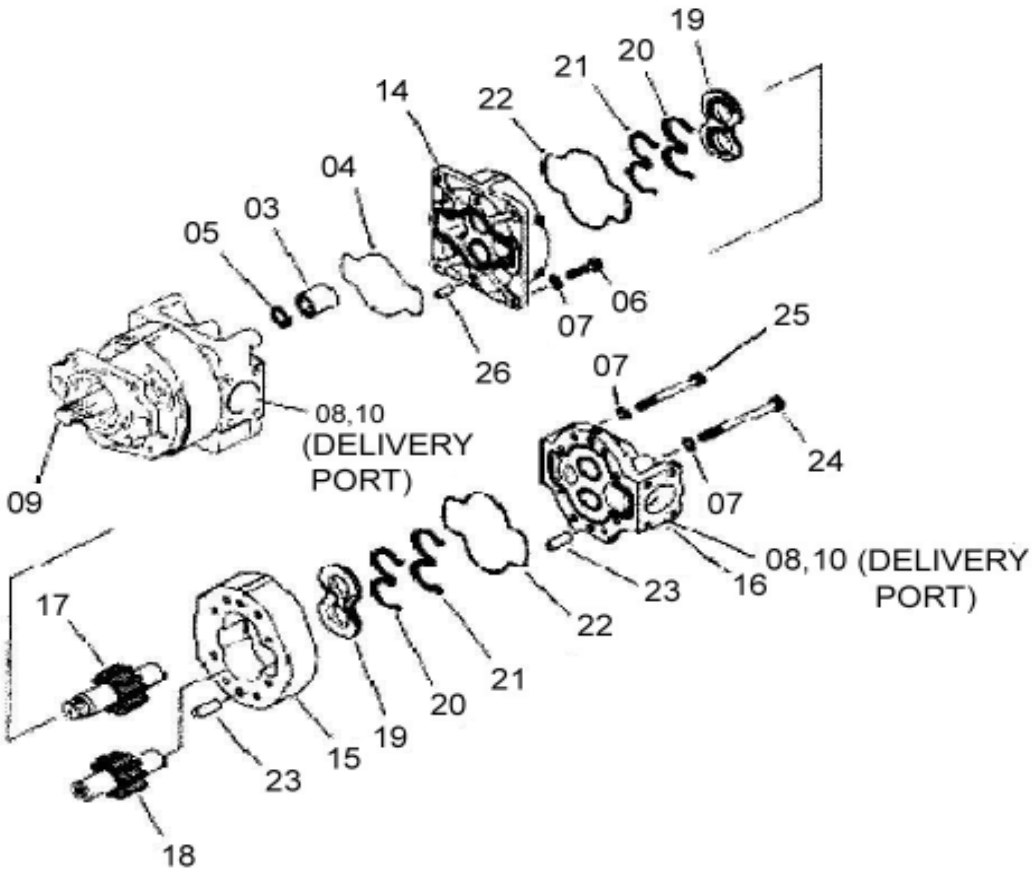

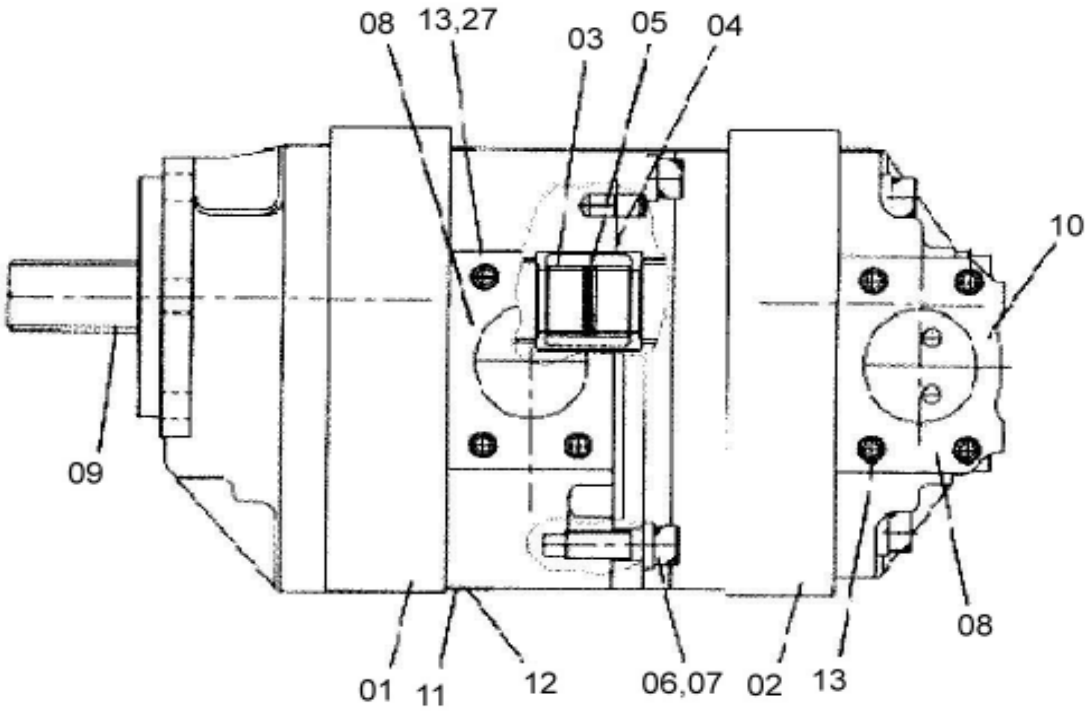

HYDRAULIC PUMP ASSY.(1/2) **FIG NO. 162**

SLNO	PART NUMBER	DESCRIPTION	QTY	REMARKS
	953-HM-01003	PUMP ASSY	1	
01	953-HM-02008	PUMP ASSY	1	
02	985-HM-02029	PUMP ASSY	1	
03	985-HM-51237	COUPLING	1	
04	985-HM-61249	O-RING	1	
05	CFL02-13212	CIRCLIP	1	
06	CFS013-41445	HEX. SCREW	4	
07	CFW01-11442	WASHER, SPRING	12	
08	985-HM-11369	COVER	2	
09	CHC04-34037	CAP	1	
10	985-HM-11352	COVER	2	
11	110-HM-21372	PLATE	1	
12	CFS33-03060	RIVET	2	
13	01190-01208	HELISERT	16	
14	985-HM-03009	BRACKET ASSY	1	
15	985-HM-21178	GEAR CASE	1	
16	985-HM-02012	COVER ASSY	1	
17	985-HM-51189	DRIVE GEAR	1	
18	985-HM-51197	DRIVEN GEAR	1	
19	985-HM-21064	SIDE PLATE	2	
20	985-HM-61079	SEAL RING	2	
21	985-HM-91057	BACKUP RING	2	
22	985-HM-61046	O-RING	2	
23	CFP04-01842	PIN, DOWEL	4	
24	CFS14-41450	HEX. SKT. SCREW	4	
25	CFS14-41415	HEX. SKT. SCREW	4	
26	CFP04-01228	PIN, DOWEL	2	
27	CFW01-11236	WASHER, SPRING	16	

FIG. 163 HYDRAULIC PUMP ASSY. (2/2)

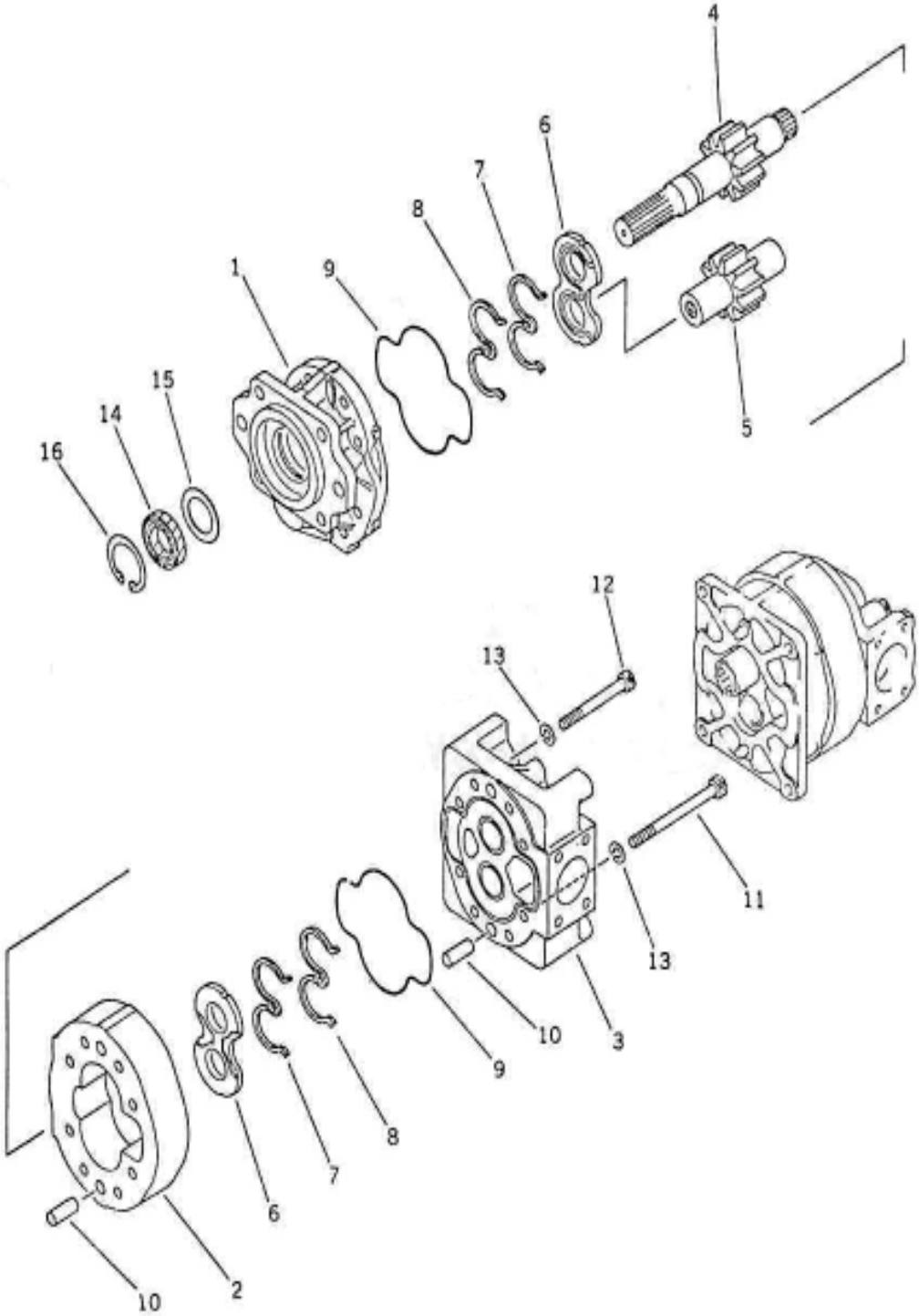

SLNO	PART NUMBER	DESCRIPTION	QTY	REMARKS
	953-HM-01003	PUMP ASSY	1	
01	985-HM-03017	BRACKET ASSY	1	
02	985-HM-21112	GEAR CASE	1	
03	985-HM-03025	CARRIER ASSY	1	
04	953-HM-51005	DRIVE GEAR	1	
05	985-HM-51131	DRIVEN GEAR	1	
06	985-HM-21064	SIDE PLATE	2	
07	985-HM-61079	SEAL RING	2	
08	985-HM-91057	BACKUP RING	2	
09	985-HM-61046	O-RING	2	
10	CFP04-01842	PIN, DOWEL	4	
11	CFS14-41460	HEX. SKT. SCREW	4	
12	CFS14-41460	HEX. SKT. SCREW	4	
13	CFW01-11442	WASHER, SPRING	8	
14	985-HM-91032	OIL SEAL	1	
15	985-HM-11109	PLATE	1	
16	CFL02-16220	RING SNAP	1	

FIG. 164 RELIEF VALVE

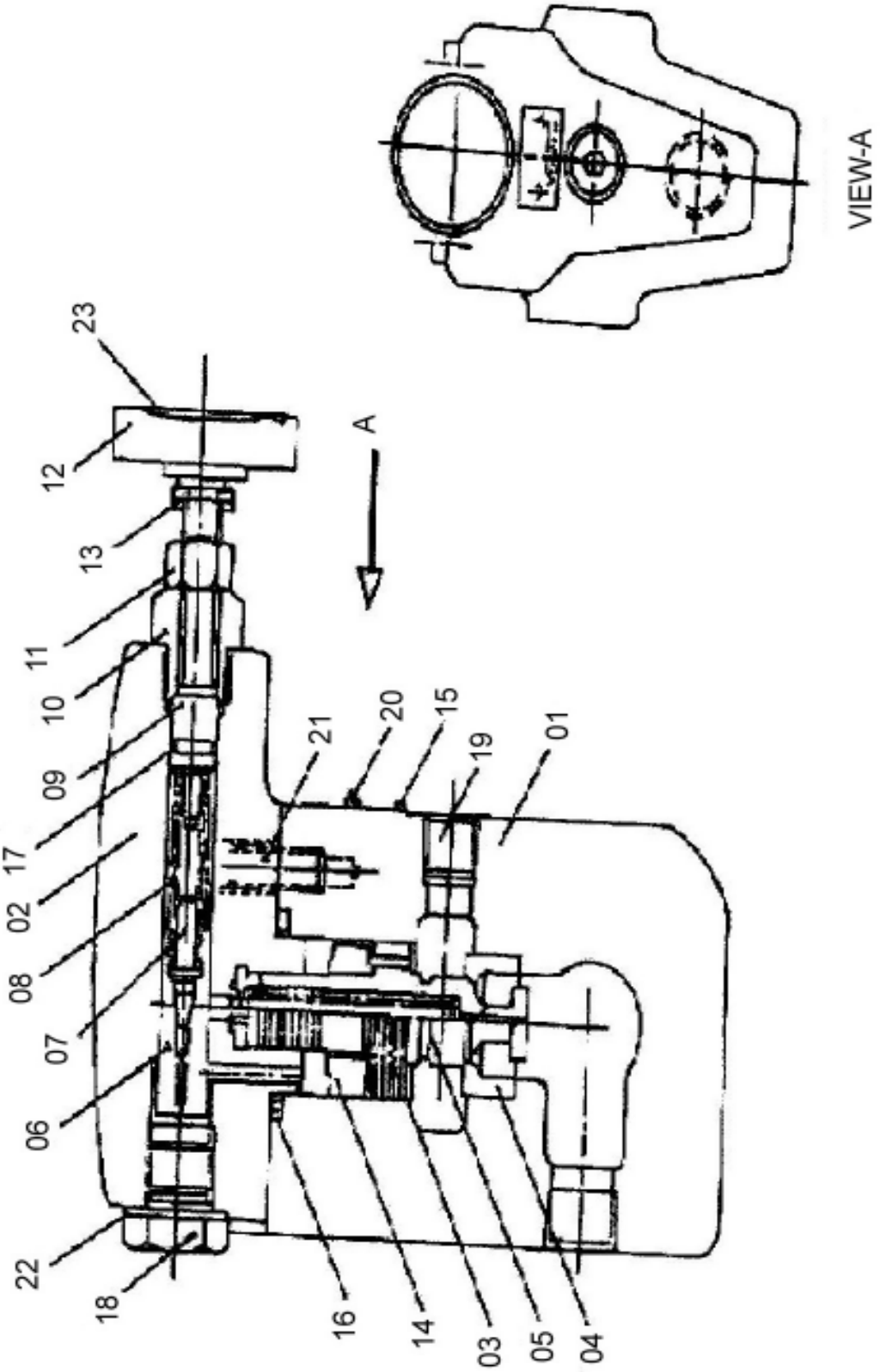

SLNO	PART NUMBER	DESCRIPTION	QTY	REMARKS
	953-HS-02098	RELIEF VALVE	1	
01	776-HS-15195	BODY	1	
02	776-HS-15202	COVER	1	
03	766-HS-15219	PISTON	1	
04	766-HS-15227	SEAT	1	
05	766-HS-15235	SPRING	1	
06	766-HS-15243	SEAT	1	
07	766-HS-15251	POPPET	1	
08	766-HS-15268	SPRING	1	
09	766-HS-15276	PLUNGER	1	
10	766-HS-15284	RETAINER	1	
11	766-HS-15292	JAM NUT	1	
12	766-HS-15308	CONTROL KNOB	1	
13	766-HS-15316	COLLAR	1	
14	766-HS-15324	SPACER	1	
15	766-HS-15332	NAME PLATE	1	
16	766-HS-15349	O-RING	1	
17	766-HS-15357	O-RING	1	
18	766-HS-15365	PIPE PLUG	1	
19	766-HS-15373	PIPE PLUG	1	
20	766-HS-15381	RIVET	2	
21	766-HS-15398	SOCKET HEAD CAP SCREW	4	
22	766-HS-15405	BONDED SEAL	1	
23		PLATE	1	NSS
	766-SK-00061	SEAL KIT		
		(INCLUDES SL.NO.16,17 & 22)	1	

FIG. 165 WORK EQUIPMENT CONTROL

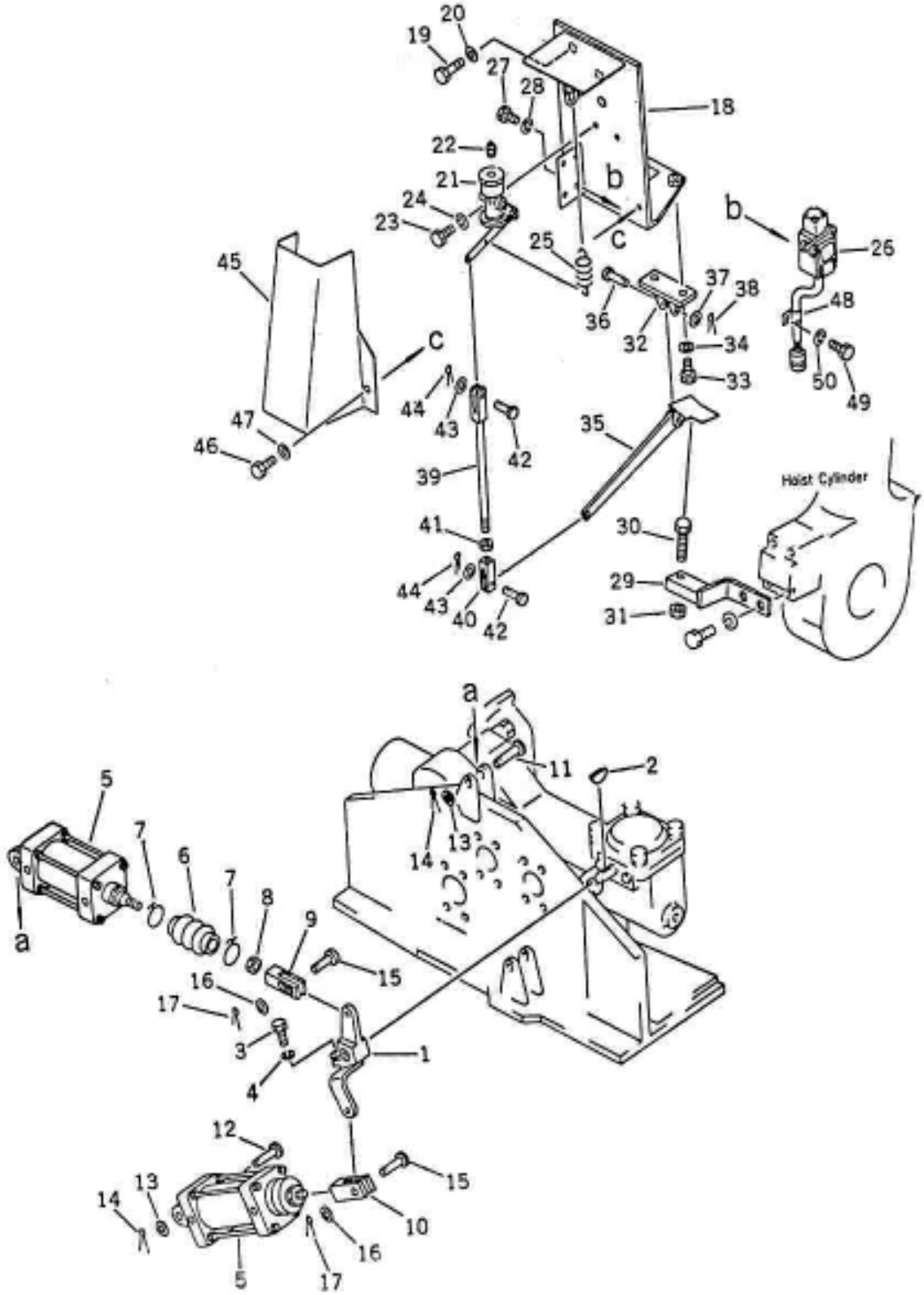

SLNO	PART NUMBER	DESCRIPTION	QTY	REMARKS
	953-HS-01036	DUMP CONTROL INST.		
01	985-WC-02086	LEVER	1	
02	CFK02-00519	KEY	1	
03	CFB01-10830	HEX. BOLT	1	
04	CFW01-10825	WASHER,SPRING	1	
05	985-WC-02207	AIR CYLINDER ASSY	2	
06	985-WC-61087	BOOT	2	
07	04059-01632	WIRE,LOCK	4	
08	985-WC-11011	NUT	2	
09	985-WC-11028	YOKE	1	
10	CFY01-21248	YOKE	1	
11	985-WC-11036	PIN	1	
12	CFP02-11248	PIN	1	
13	CFW02-11225	WASHER	4	
14	CFP01-03020	PIN,COTTER	4	
15	CFP02-11238	PIN	2	
16	985-WC-02142	BRACKET	1	
17	CFB01-11040	HEX. BOLT	4	
18	CFW05-10032	WASHER	8	
19	985-WC-02215	CONTROL VALVE,AIR	1	
20	CPL01-11113	PLUG	1	
21	CFB01-10620	HEX. BOLT	2	
22	CFW01-10619	WASHER,SPRING	6	
23	985-WC-11044	SPRING	1	
24	985-WC-02175	SWITCH,POSITIONER	1	
25	CFS01-20616	HEX. SCREW	4	
26	985-WC-02061	BRACKET	1	
27	985-WC-11117	BOLT	1	
28	CFN04-11411	HEX. NUT	1	
29	985-WC-02223	PLATE	1	
30	CFB01-11025	HEX. BOLT	4	
31	985-WC-02126	LEVER	1	
32	CFP01-11042	PIN	1	
33	CFW02-11020	WASHER	1	
34	CFP01-03018	PIN,COTTER	1	
35	CFY01-10819	ROD	1	

FIG. 165 WORK EQUIPMENT CONTROL

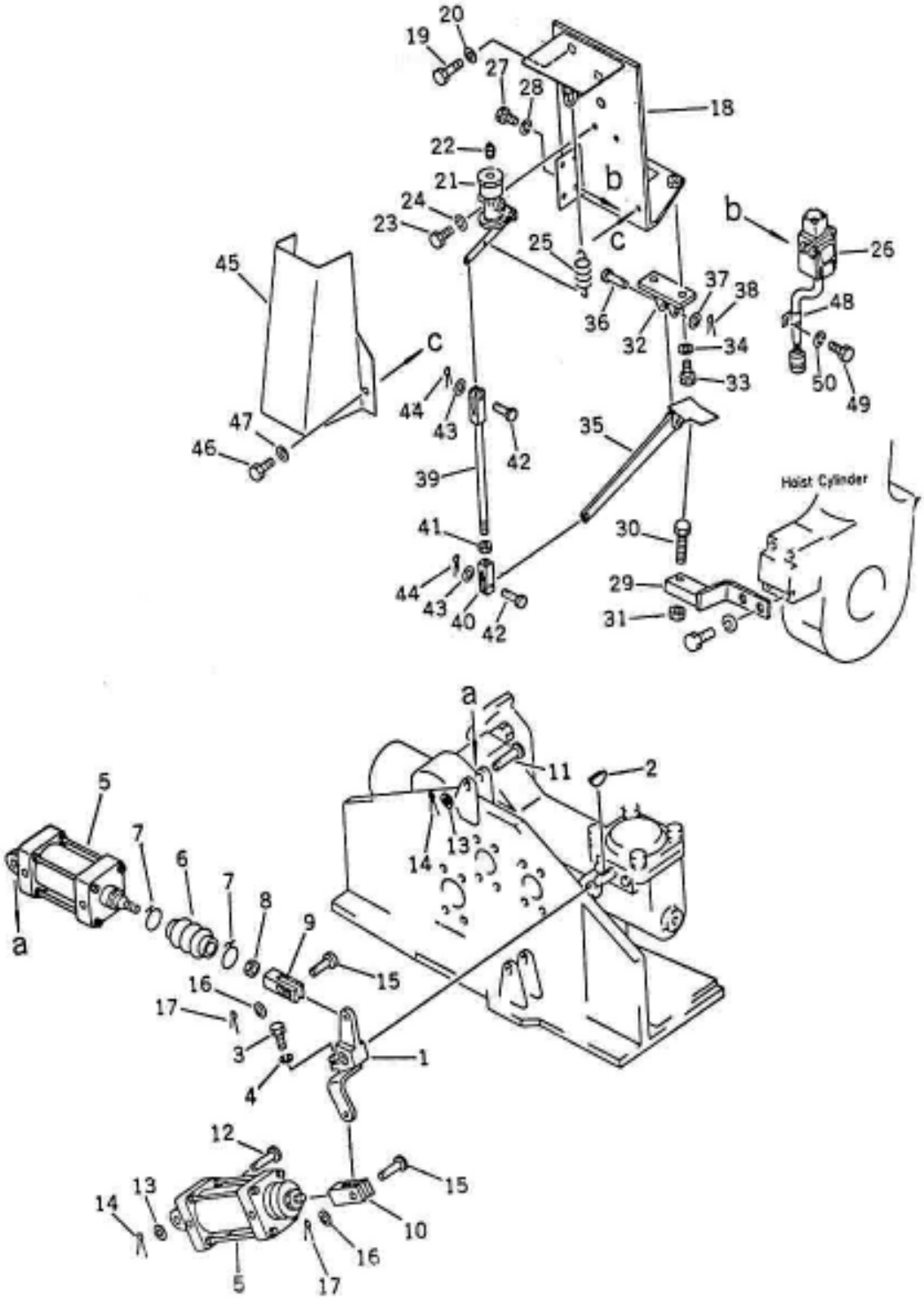

SLNO	PART NUMBER	DESCRIPTION	QTY	REMARKS
36	CFY01-20832	YOKE	1	
37	CFN01-10808	HEX. NUT	1	
38	CFP02-10825	PIN	2	
39	CFW02-10816	WASHER	2	
40	CFP01-02012	PIN,COTTER	2	
41	985-WC-02159	COVER	1	
42	CCC06-01214	CLIP	1	
43	CFS01-21016	HEX. SCREW	1	
44	CFW01-11030	WASHER,SPRING	1	
	985-SK-01428	SERVICE KIT		

FIG. 166 WORK EQUIPMENT CONTROL

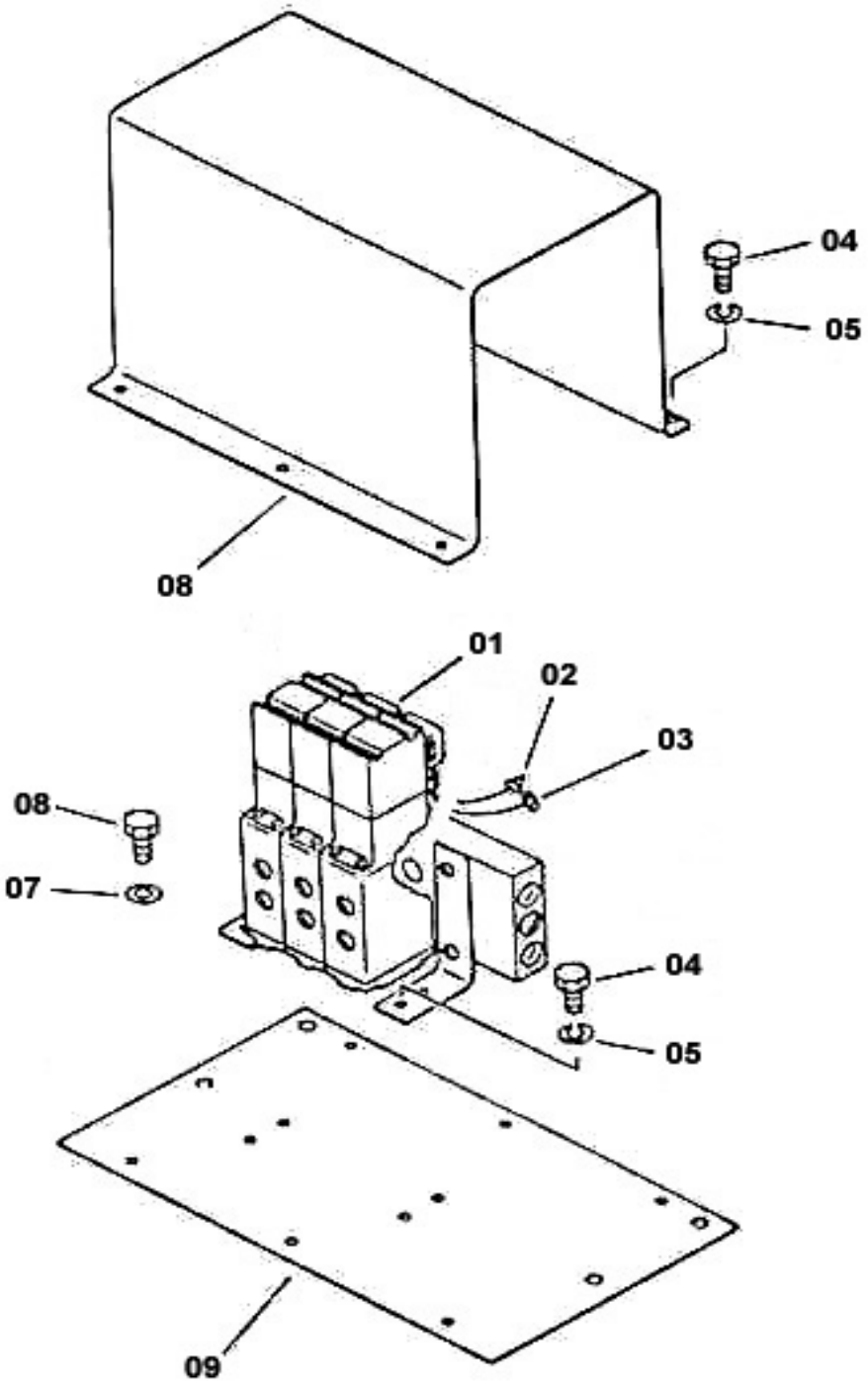

SLNO	PART NUMBER	DESCRIPTION	QTY	REMARKS
01	985-ZZ-15868	VALVE SOLENOID	1	
02	985-WC-02045	WIRE	3	
03	985-WC-02053	WIRE	3	
04	CFS01-20616	HEX. SCREW	20	
05	CFW01-10619	WASHER, SPRING	20	
06	CFS01-10820	HEX. SCREW	8	
07	CFW01-10825	WASHER, SPRING	8	
08	985-WC-11052	COVER	1	
09	985-WC-02078	BRACKET	1	

FIG. 167 STEERING SYSTEM PIPING INST. (1/3)

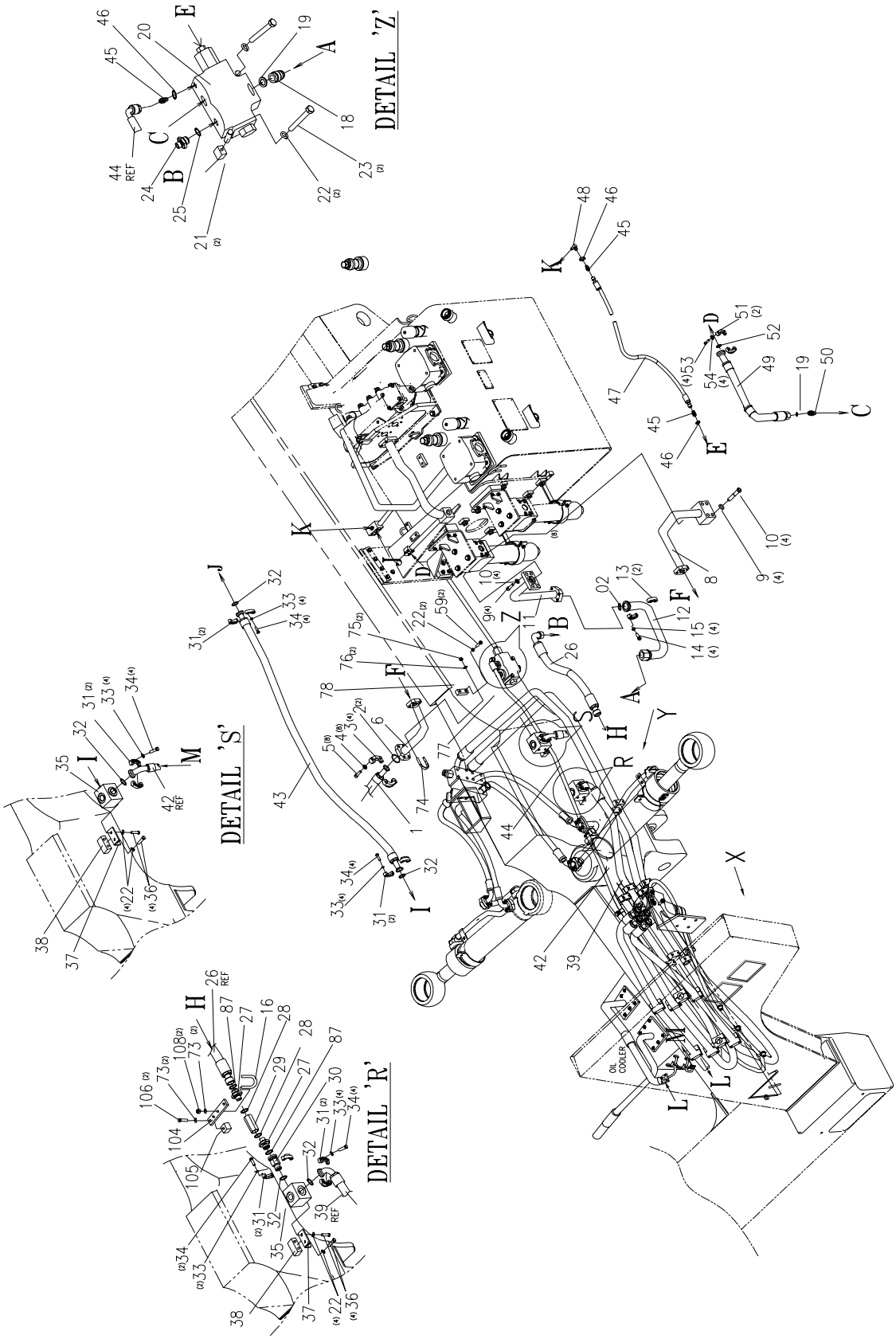

SLNO	PART NUMBER	DESCRIPTION	QTY	REMARKS
	953-HS-01037	STEERING SYSTEM INST.		
01	CHH13-02410	HOSE ASSY	1	
02	CHS01-13048	O-RING	5	
03	CFG03-24061	SPLIT FLANGE	6	
04	CFW05-12032	WASHER	12	
05	CFB27-11240	HEX. BOLT	12	
06	953-PH-02188	TUBE ASSY	1	
08	953-PH-02171	TUBE ASSY	1	
09	CFW01-11648	WASHER, SPRING	8	
10	CFB01-21695	HEX. BOLT	8	
11	953-PH-02196	TUBE ASSY	1	
12	953-PH-02406	HOSE ASSY	1	
13	CFG01-16045	SPLIT FLANGE	2	
14	CFB27-11035	HEX. BOLT	4	
15	CFW01-11030	WASHER, SPRING	11	
16	955-HS-11214	U-BOLT	1	
17	985-HS-02353	BRACKET	1	
18	TF 3238	CONNECTOR	1	
19	TC 9898	O-RING	2	
20	953-HS-02024	PRIORITY VALVE	1	
21	CPW19-12025	TAPPED PAD	2	
22	CFW01-11236	WASHER, SPRING	29	
23	CFB01-21295	HEX. BOLT	2	
24	VM 3491	CONNECTOR	1	
25	TH 5604	O-RING	1	
26	953-PH-02252	HOSE ASSY	1	
27	953-HS-12052	CONNECTOR	2	
28	953-HS-03094	SEALING WASHER	2	
29	953-HS-02057	CHECK VALVE	1	
30	766-HS-02786	TUBE ASSY	1	
31	CFG01-10045	FLANGE	12	
32	VG 9097	O-RING	6	
33	CFW01-10929	WASHER, SPRING	20	
34	CFB25-11032	HEX. BOLT	16	
35	766-HS-12473	BLOCK	2	
36	CFS01-21225	HEX. SCREW	8	

FIG. 167 STEERING SYSTEM PIPING INST. (2/3)

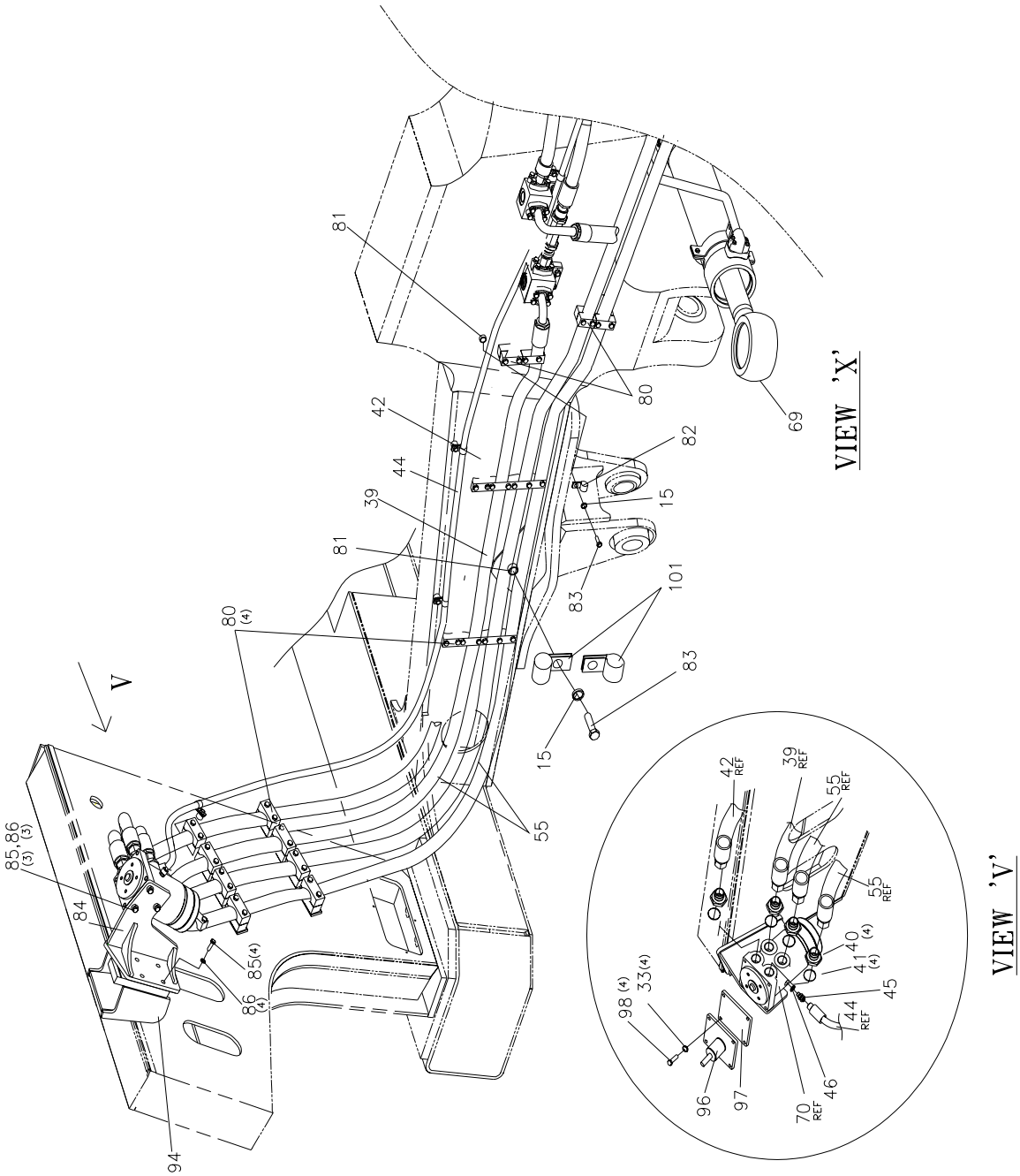

SLNO	PART NUMBER	DESCRIPTION	QTY	REMARKS
37	766-HS-12457	PLATE	2	
38	766-HS-11093	PAD	2	
39	953-HS-02551	HOSE ASSY	1	
40	TL 4501	CONNECTOR	4	
41	TC 9899	O-RING	4	
42	953-HS-02568	HOSE ASSY	1	
43	953-HS-03126	HOSE ASSY	1	
44	953-HS-02592	HOSE ASSY	1	
45	VY 7502	CONNECTOR	4	
46	594300250240	O-RING	4	
47	953-HS-02576	HOSE ASSY	1	
48	TR 2767	FITTING 90 DEG.	1	
49	953-PH-02236	HOSE ASSY	1	
50	VM 3492	CONNECTOR	1	
51	CFG01-12051	SPLIT FLANGE	2	
52	VG 9096	O-RING	1	
53	CFB25-11138	HEX. BOLT	4	
54	CFW01-11134	WASHER, SPRING	4	
55	953-HS-02608	HOSE ASSY	2	
56	985-PH-02687	C.O.R. VALVE ASSY	1	
57	CHS01-13030	O-RING	6	
58	985-PH-02873	BRACKET	1	
59	CFS01-21230	HEX. SCREW	8	
60	CHH13-01208	HOSE ASSY	3	
61	CHS01-13025	O-RING	8	
62	CFG03-12034	SPLIT FLANGE	16	
63	CFB01-10830	HEX. BOLT	32	
64	CFW05-08023	WASHER	32	
65	985-PH-02938	TUBE ASSY	1	
66	985-PH-02913	TUBE ASSY	1	
67	953-PH-02025	TUBE ASSY	1	
68	985-PH-02905	TUBE ASSY	1	
69	953-HC-01009	STEERING CYLINDER	2	
70	953-HS-02016	STEERING UNIT	1	
71	CFB01-10845	HEX. BOLT	8	
72	CFB01-10835	HEX. BOLT	8	
73	CFW01-10825	WASHER, SPRING	15	

FIG. 167 STEERING SYSTEM PIPING INST. (3/3)

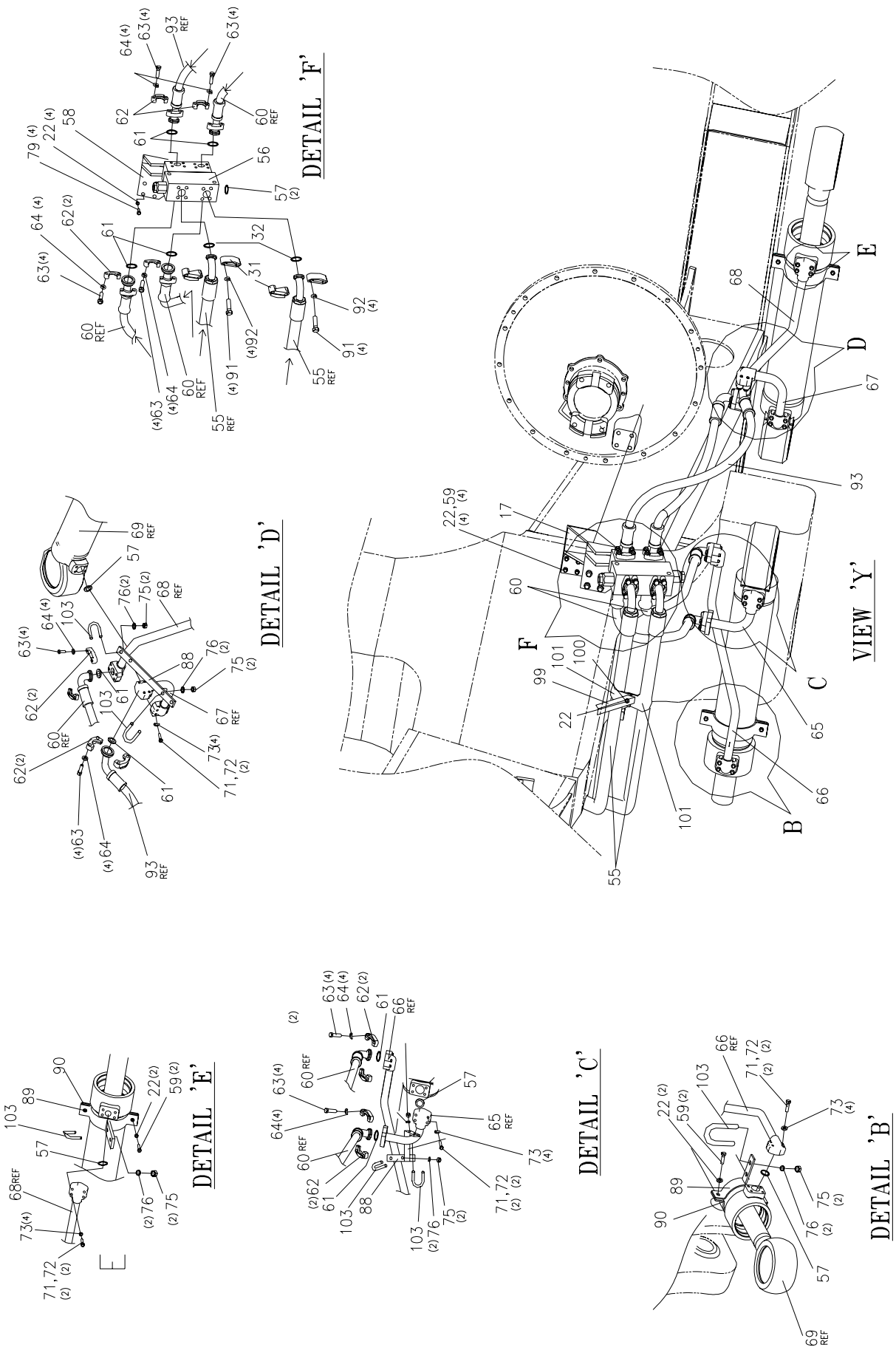

SLNO	PART NUMBER	DESCRIPTION	QTY	REMARKS
74	CCC07-24346	C-CLAMP	1	
75	CFN28-21011	HEX. NUT	16	
76	CFW05-10032	WASHER	16	
77	953-HS-12377	BRACKET	1	
78	CPW35-12070	TAPPED PAD	1	
79	CFS01-31240	HEX. SCREW	8	
80	953-SS-02044	CLAMP ASSY	5	
81	CPW03-10022	BOSS ROUND	7	
82	CCC05-22110	PVC CLAMP	5	
83	CFS01-21016	HEX. SCREW	7	
84	778-HS-02496	BRACKET	1	
85	CFB25-11332	HEX. BOLT	7	
86	CFW01-11338	WASHER, SPRING	7	
87	564300004540	O-RING	2	
88	953-HS-02762	PLATE STR	2	
89	953-HS-02787	BAND ASSY	2	
90	953-HS-12693	BAND	2	
91	985-PH-11256	BOLT	8	
92	CFW06-10032	WASHER	8	
93	953-HS-03134	HOSE ASSY	1	
94	953-HS-02235	ORBITROL STR	1	
95	985-AS-74083	SPRIAL TUBE	2	
96	565410150000	STEERING COLUMN ASSY	1	
97	565410000340	GASKET	1	
98	CFB25-21035	HEX. BOLT	4	
99	953-PH-02422	BRACKET	1	
100	CFS01-31250	HEX. SCREW	1	
101	CCC01-38135	CLIP	6	
102	CCC10-00519	BAND	8	
103	CCC05-22738	U-CLIP	6	
104	953-HS-12936	PLATE	1	
105	CPW13-08015	TAPPED PAD	1	
106	CFS01-20820	HEX. SCREW	1	
	953-HSB-0088	PIPING KIT		
	953-HSB-0388	HOSE ASSY KIT		
	953-HSB-0452	O-RING KIT		

FIG. 168 EMERGENCY STEERING SYS. PIPING INST.

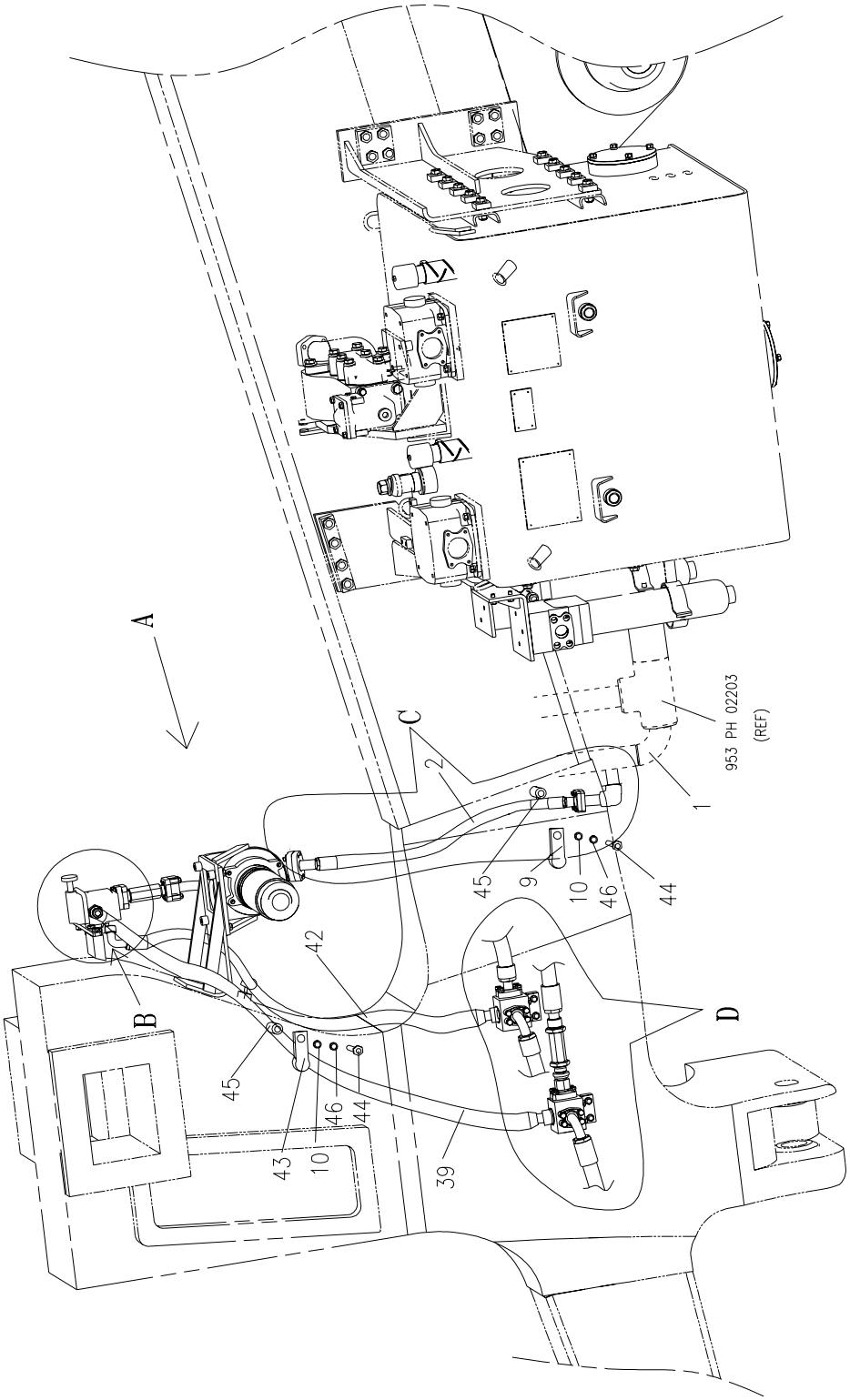

SLNO	PART NUMBER	DESCRIPTION	QTY	REMARKS
	953-HS-01077	EMERGENCY STG. SYS. INST.		
01	953-PH-02203	TUBE ASSY	REF	
02	953-PH-03095	HOSE ASSY	1	
03	SV 2581	O-RING	2	
04	CFB25-11138	HEX. BOLT	8	
05	CFW01-11134	WASHER, SPRING	8	
06	CFG01-12051	SPLIT FLANGE	4	
07	985-SS-02219	FLOW SWITCH	1	
08	CFS01-21240	HEX. SCREW	4	
09	778-AS-02053	CLIP	1	
10	CFW01-11030	WASHER, SPRING	9	
11	953-HS-02705	BRACKET	1	
12	985-SS-02121	BRACKET	1	
13	985-SS-03175	PUMP ASSY	1	
14	985-SS-03183	MOTOR ASSY	1	
15	CFS01-21030	HEX. SCREW	6	
16	766-HS-02956	PIPE ASSY	1	
17	CHS01-13030	O-RING	1	
18	CFS01-20835	HEX. SCREW	6	
19	CFS01-20845	HEX. SCREW	6	
20	CFW01-10825	WASHER, SPRING	12	
21	953-HS-02713	NIPPLE	2	
22	CHS01-13025	O-RING	2	
23	953-HS-02057	CHECK VALVE	1	
24	953-HS-03094	SEALING WASHER	2	
25	CFG03-12039	SPLIT FLANGE	2	
26	766-HS-02964	PIPE ASSY	1	
27	TH 6942	FITTING	1	
28	766-HS-12416	CONNECTOR	1	
29	766-HS-12424	COPPER WASHER	3	
30	TH 5604	O-RING	3	
31	953-HS-02098	RELIEF VALVE	1	
32	766-HS-14499	CLAMP	1	
33	CFW01-11236	WASHER, SPRING	8	
34	CFN01-11211	HEX. NUT	2	
35	766-HS-14482	PLATE	1	

FIG. 168 EMERGENCY STEERING SYS. PIPING INST.

SLNO	PART NUMBER	DESCRIPTION	QTY	REMARKS
36	953-HS-12247	TAPPED PAD	1	
37	CFS01-21225	HEX. SCREW	2	
38	766-HS-12676	CONNECTOR	2	
39	953-HS-02681	HOSE ASSY	1	
40	VD 4677	FITTING	2	
41	MTC 9899	O-RING	2	
42	953-HS-02698	HOSE ASSY	1	
43	CCC05-32135	CLIP	2	
44	CFS01-21020	HEX. SCREW	3	
45	CPW03-10022	PAD	3	
46	CPW02-11020	WASHER	3	
	953-HSB-0063	O-RING KIT		
	953-HSB-0071	HOSE ASSY KIT		
	953-HSB-0055	PIPING KIT		

FIG. 169 HOIST CYLINDER INST.

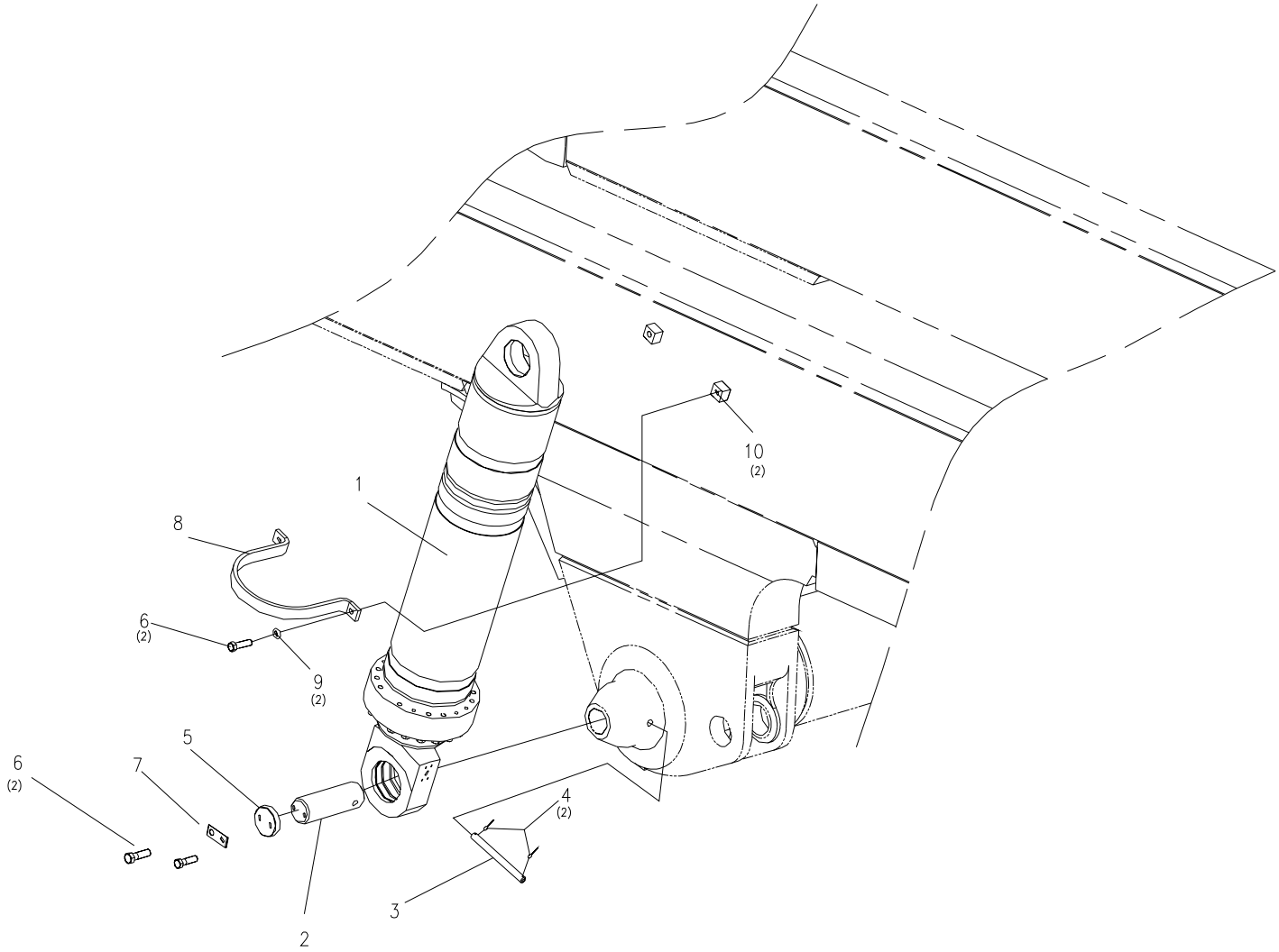

SLNO	PART NUMBER	DESCRIPTION	QTY	REMARKS
	953-HS-01044	HOIST CYLINDER INST		
01	953-HC-01017	HOIST CYLINDER	2	
02	985-MF-11018	PIN	2	
03	985-MF-11026	PIN	2	
04	CFP01-05040	COTTER PIN	4	
05	CLP01-18018	HOLDER	2	
06	CFB01-21655	HEX. BOLT	8	
07	CLP02-08016	LOCK	2	
08	953-HS-11494	CLAMP	2	
09	CFW01-11648	WASHER, SPRING	4	
10	935-CH-11368	TAPPED BOSS	4	

FIG. 170 HYDRAULIC PUMP ASSY. (BRAKE OIL COOLER)

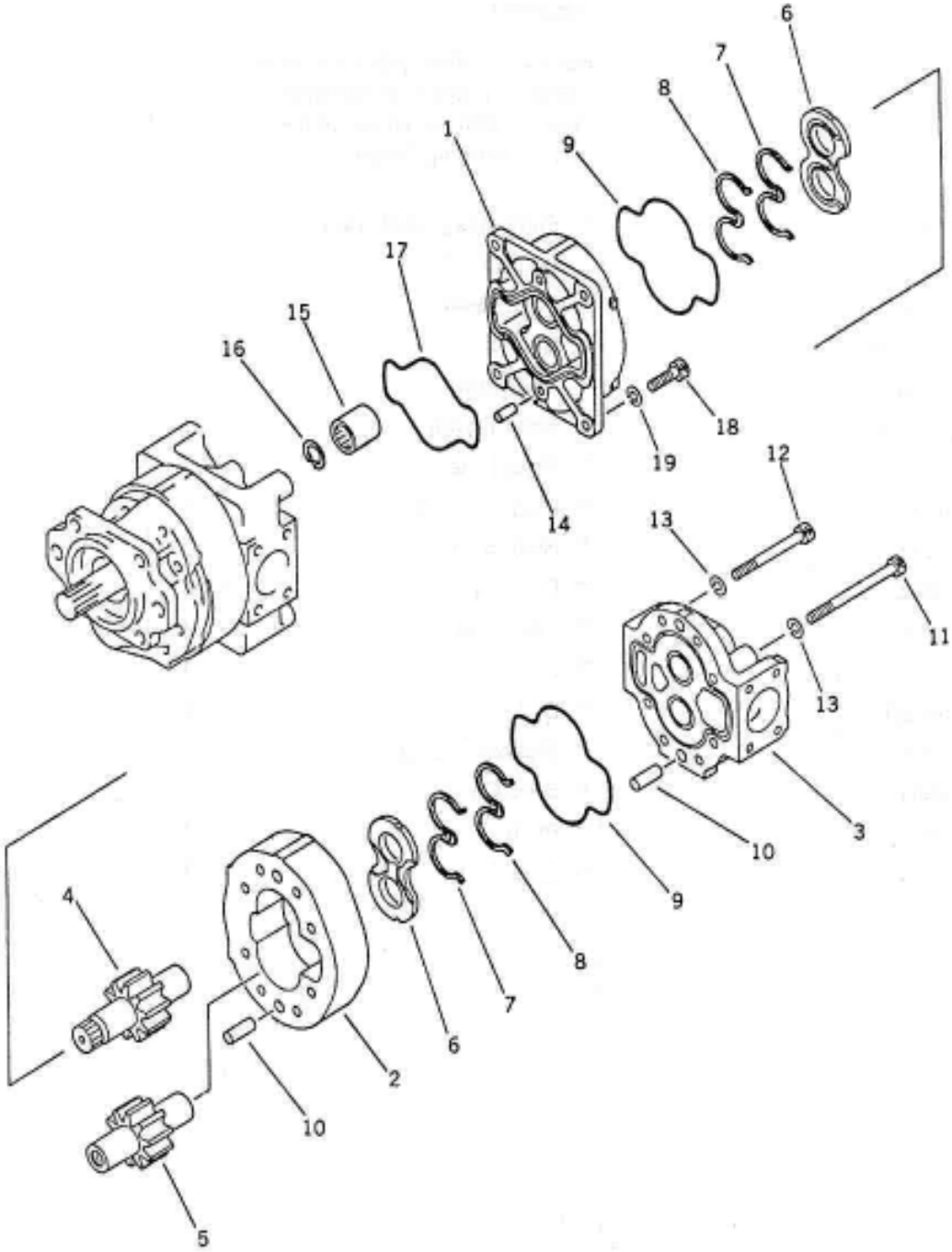

HYDRAULIC PUMP ASSY. (BRAKE OIL COOLER) **FIG NO. 170**

SLNO	PART NUMBER		DESCRIPTION	QTY	REMARKS
	985-HM-01028		PUMP ASSY	2	
	705-11-43530	*	PUMP ASSY (SAL 140)	1	
01	705-17-04520	**	BRACKET	1	
02	705-17-43010	**	CASE,GEAR	1	
03	705-17-04120	**	COVER	1	
04	705-17-43450	**	GEAR,DRIVE	1	
05	705-17-43510	**	GEAR,DRIVEN	1	
06	705-17-04611	**	PLATE,SIDE	2	
07	705-17-04441	**	RING,BACK-UP	2	
08	705-17-04471	**	RING,SEAL	2	
09	705-17-04382	**	O-RING	2	
10	04020-01842	**	PIN,DOWEL	4	
11	705-17-04730	**	BOLT	4	
12	705-17-04660	**	BOLT	4	
13	01602-21442	**	WASHER,SPRING	8	
14	04020-01228	**	PIN,DOWEL	2	
15	705-17-04310	*	COUPLING	1	
16	04065-03212	*	RING,SNAP	1	
17	705-17-04481	*	O-RING	1	
18	705-19-03470	*	BOLT	4	
19	01602-21442	*	WASHER,SPRING	4	

FIG. 171 HOIST PIPING SYS. INST. (1/3)

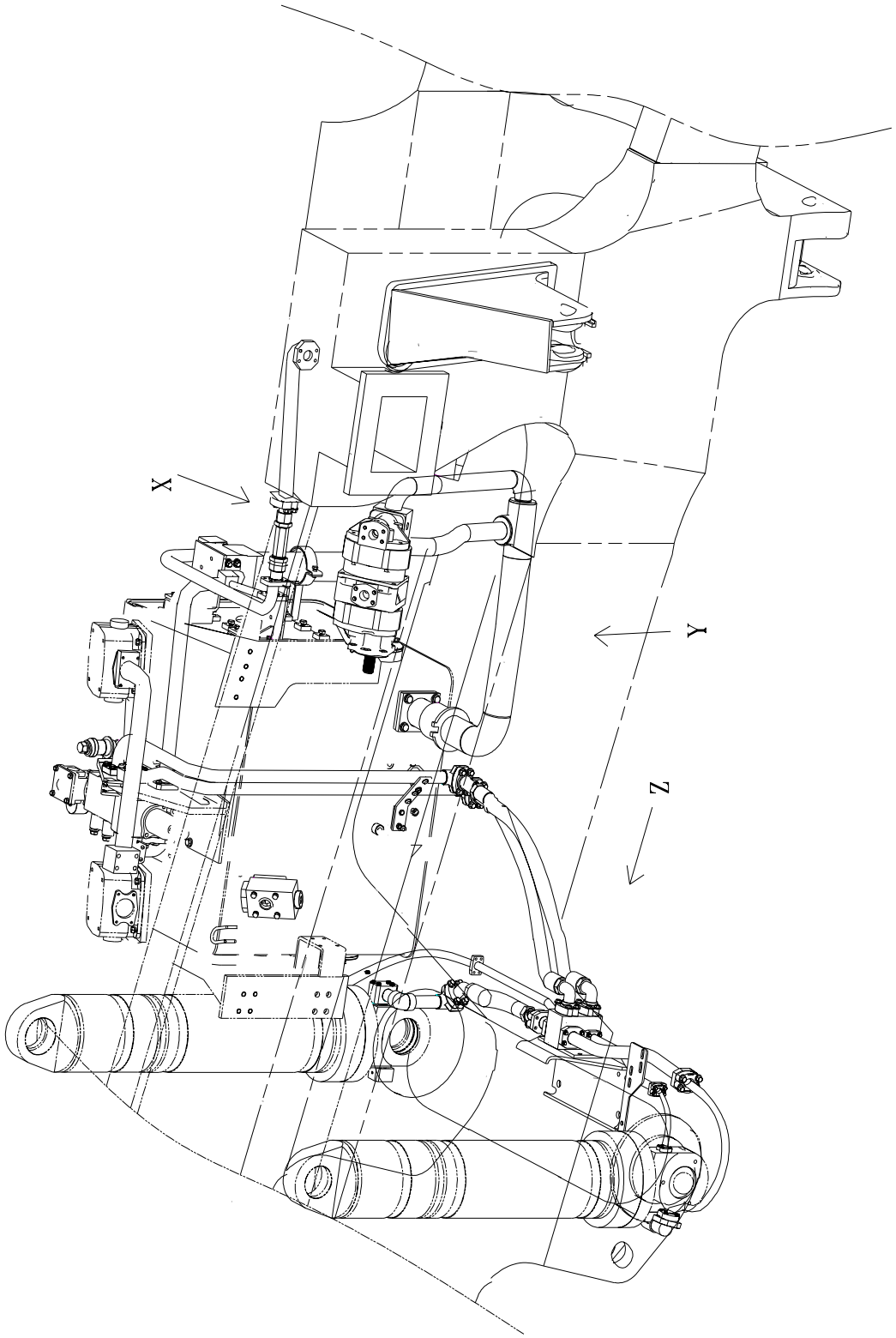

SLNO	PART NUMBER	DESCRIPTION	QTY	REMARKS
	953-PH-01012	HOIST PIPING INST		
01	953-HM-01003	PUMP ASSY	1	
02	CHS01-12130	O-RING	1	
03	CFS01-21235	HEX. SCREW	22	
04	CFW05-12032	WASHER	62	
05	985-PH-02468	TUBE	1	
06	CHS01-12070	O-RING	2	
07	CFB02-21220	HEX. BOLT	4	
08	CFW01-11236	WASHER, SPRING	68	
09	985-SS-02179	TUBE	1	
10	CFB27-11240	HEX. BOLT	64	
11	CHH30-25820	HOSE	2	
12	953-HS-03183	CLAMP	4	
13	953-PH-02203	TUBE ASSY	1	
14	CCC09-34000	COUPLING	1	
15	953-HS-02276	HOSE ASSY	1	
16	CHS01-13048	O-RING	19	
17	CFG01-14061	SPLIT FLANGE	32	
18	953-PH-02106	TUBE STR	1	
19	CFB01-21200	BOLT	4	
20	953-PH-02099	TUBE STR	1	
21	953-HS-11194	CONNECTOR	2	
22	953-HS-03118	COPPER WASHER	2	
23	953-HS-02065	CHECK VALVE	1	
24	766-HS-02178	PIPE ASSY	1	
25	953-PH-03192	TUBE STR	1	
26	953-PH-03184	TUBE STR	1	
27	955-ZZ-01383	NIPPLE	1	
28	CHS01-12060	O-RING	2	
29	CFB01-11260	HEX. BOLT	10	
30	CFB01-21695	BOLT	8	
31	953-PH-02439	HOSE ASSY	1	
32	CFW01-11648	SPRING WASHER	8	
33	985-PH-11101	PLATE	1	

FIG. 171 HOIST PIPING SYS. INST. (2/3)

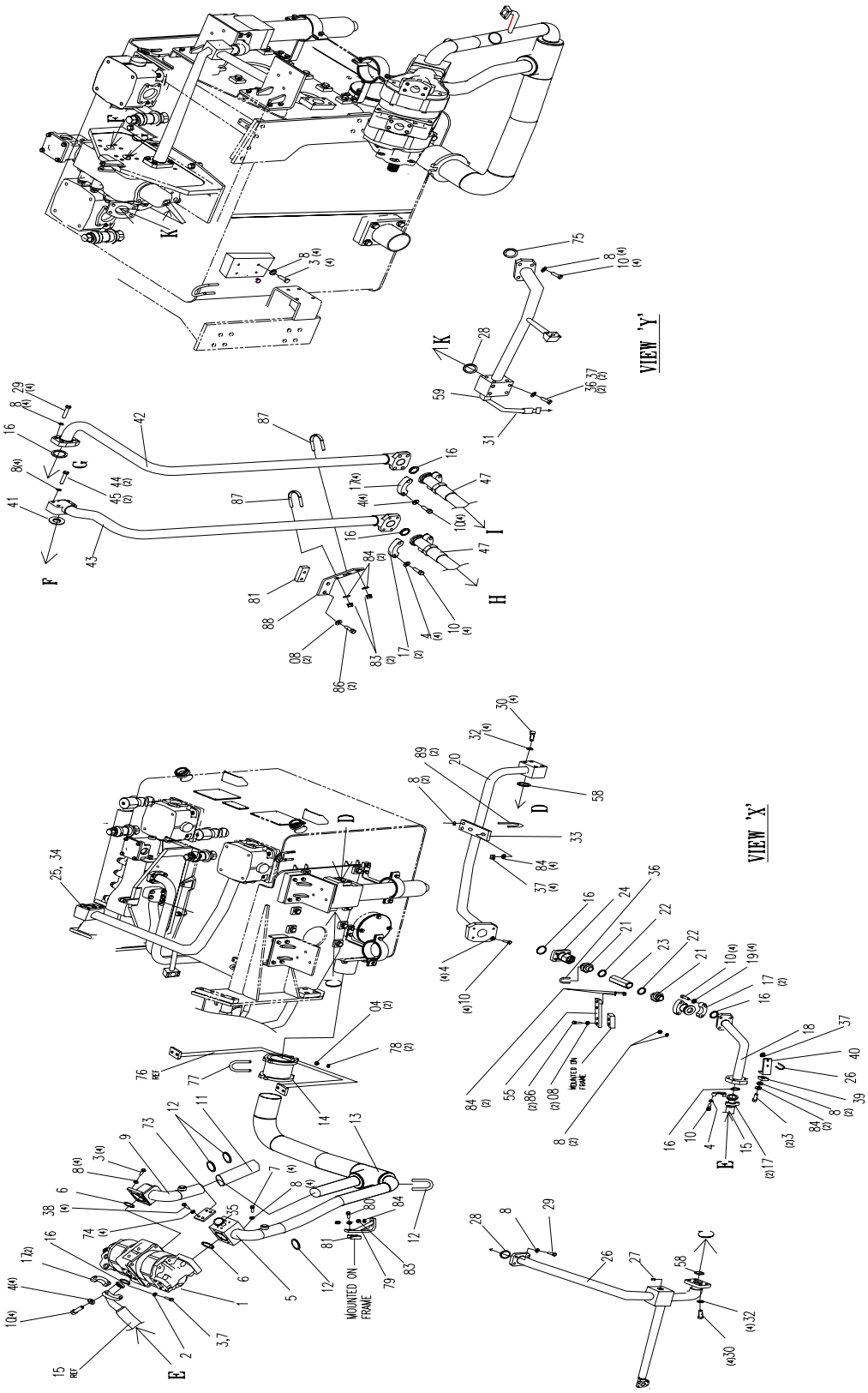

SLNO	PART NUMBER	DESCRIPTION	QTY	REMARKS
34	953-HS-02802	TUBE	1	
35	CHS01-13035	O-RING	2	
36	CFB01-11055	HEX. BOLT	2	
37	CFB01-11050	HEX. BOLT	2	
38	CFW01-11030	WASHER, SPRING	8	
39	CPW35-12070	TAPPED PAD	1	
40	953-HS-12377	BRACKET	1	
41	CHS01-13045	O-RING	4	
42	953-PH-02122	TUBE STR	1	
43	953-PH-02114	TUBE STR	1	
44	CFB01-21290	HEX. BOLT	2	
45	CFB01-21280	HEX. BOLT	4	
46	CHH09-02410	HOSE ASSY	2	
47	CHH13-12412	HOSE ASSY	2	
48	CFB27-11250	HEX. BOLT	4	
49	985-PH-02243	JOINT	1	
50	CPL01-10810	PLUG	2	
51	953-HS-11048	VALVE	1	
52	985-PH-11191	COVER	1	
53	CHS01-13050	O-RING	1	
54	953-HS-02219	TUBE	1	
55	953-HS-12303	FORMED PLATE	1	
56	985-PH-02379	TUBE	1	
57	CFB01-11270	HEX. BOLT	2	
58	CHS01-13032	O-RING	2	
59	TR 2767	FITTING 90 DEG.	1	
60	953-HS-02827	TUBE	1	
61	CFB01-21285	HEX. BOLT	4	
62	953-HS-02195	TUBE	1	
63	CHS01-13035	O-RING	7	
64	CFB01-10830	HEX. BOLT	24	
65	CFW01-10825	WASHER, SPRING	12	
66	953-HS-02251	HOSE	2	
67	CFG01-06038	SPLIT FLANGE	8	
68	CFW05-08023	WASHER	16	
69	985-PH-11134	JOINT	1	

FIG. 171 HOIST PIPING SYS. INST. (3/3)

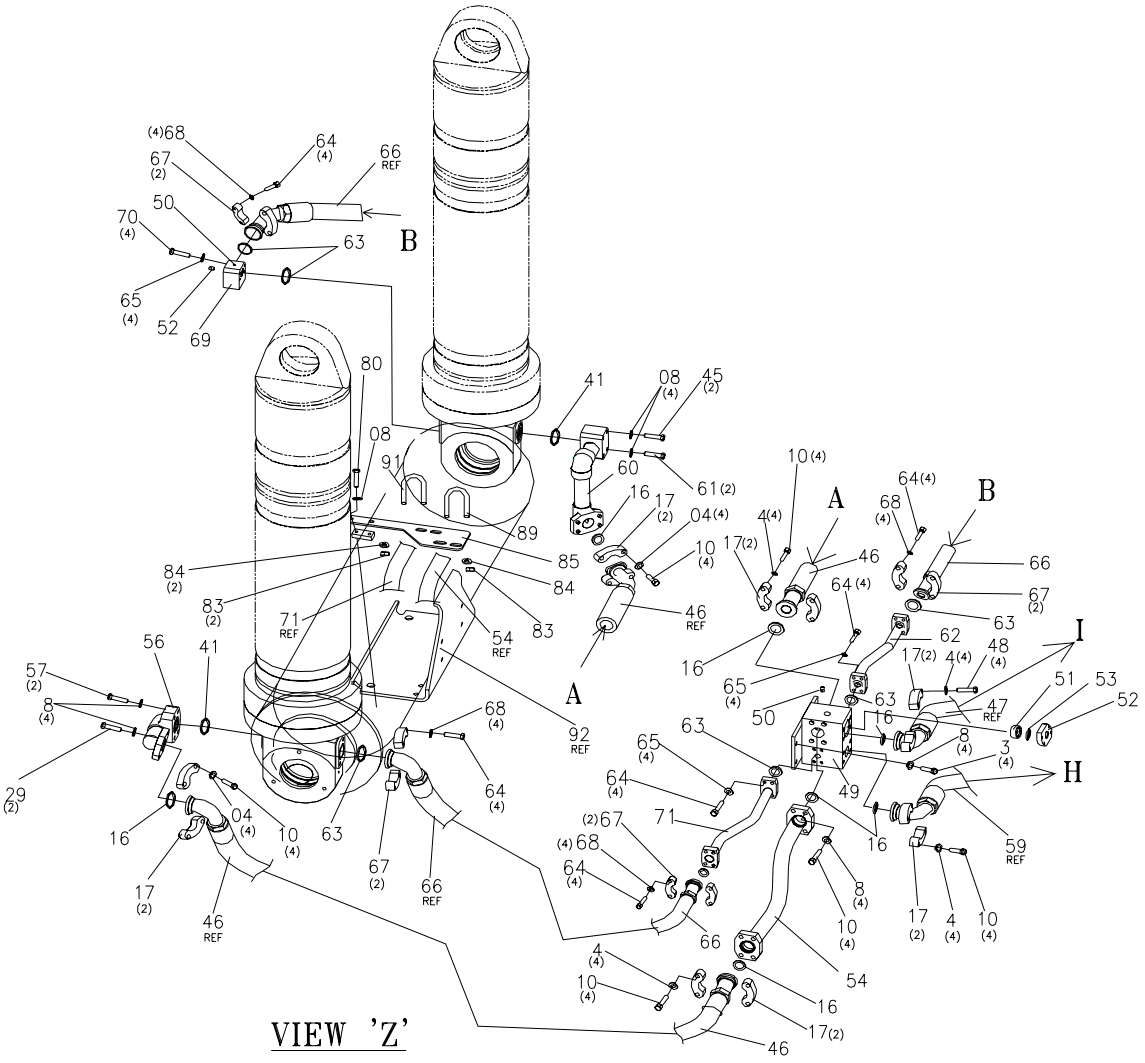

SLNO	PART NUMBER	DESCRIPTION	QTY	REMARKS
70	CFB01-10860	HEX. BOLT	4	
71	953-HS-02202	TUBE	1	
72	953-HS-12328	PLATE	1	
73	953-HS-12125	PLATE	1	
74	CFB01-11035	HEX. BOLT	4	
75	CHS01-12075	O-RING	1	
76	935-PH-03151	BRACKET	1	
77	CCC07-21079	CLIP	1	
78	CFN24-21214	HEX. NUT	2	
79	953-HS-02665	BRACKET	1	
80	CFS01-21225	HEX. SCREW	4	
81	CPW39-12080	SEAT	4	
82	CCC07-26155	CLIP	1	
83	CFN24-21011	HEX. NUT	14	
84	CFW05-10032	WASHER	20	
85	985-PH-11037	BRACKET	1	
86	CFS01-21230	HEX. SCREW	14	
87	CCC07-24949	CLIP	5	
88	985-PH-11012	BRACKET	1	
89	CCC07-24346	CLIP	3	
90	985-PH-11126	BRACKET	1	
91	CCC07-22738	CLIP	1	
92	953-MF-01083	BRACKET	1	
	953-HSB-0282	O-RING KIT		
	953-HSB-0299	HOSE ASSY KIT		
	953-HSB-0306	PIPING KIT		

FIG. 172 BRAKE OIL COOLER PIPING INST. (1/4)

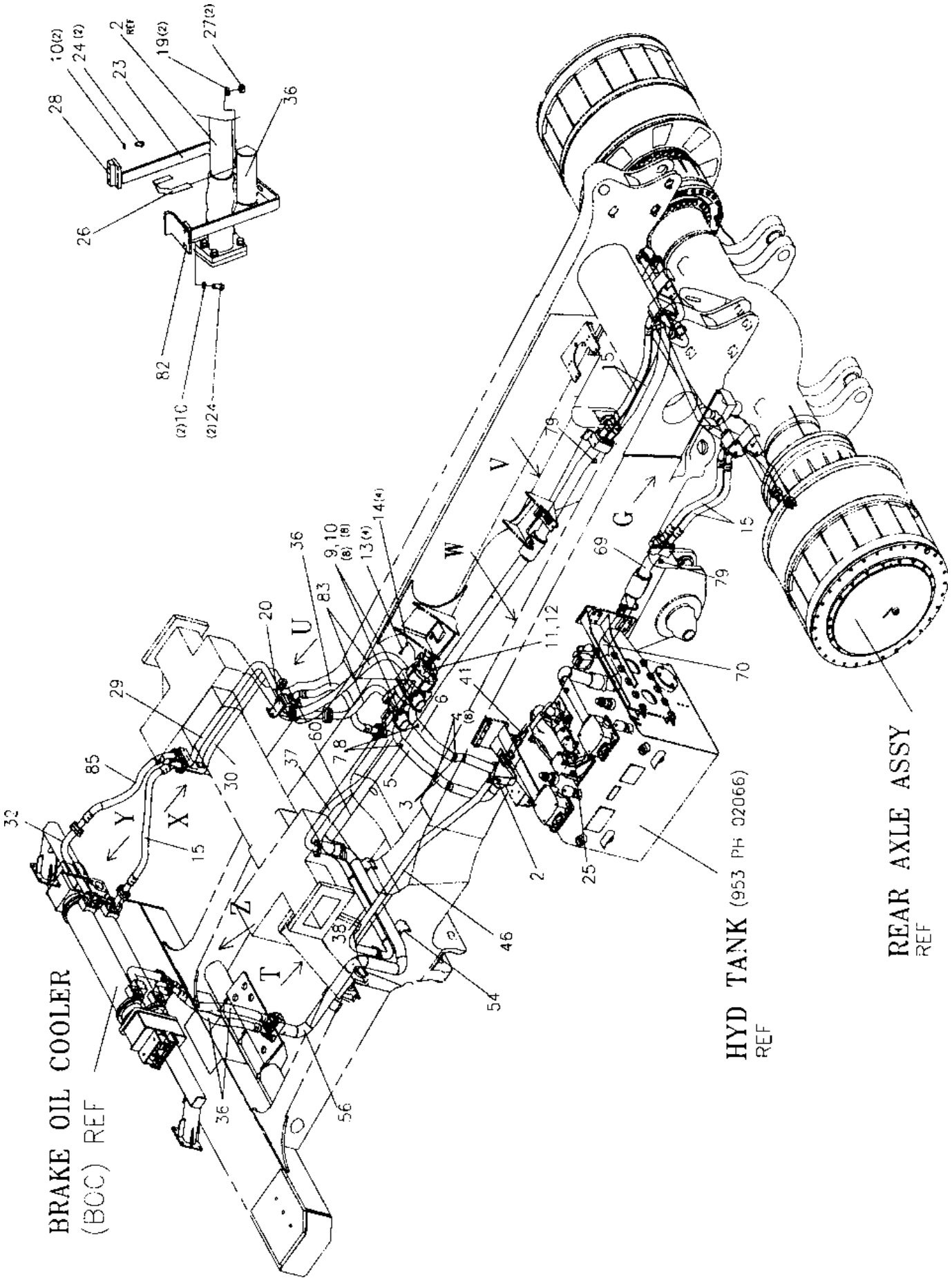

SLNO	PART NUMBER	DESCRIPTION	QTY	REMARKS
	953-PH-01029	BRAKE OIL COOLER PIPING INST.		
01	CCC09-03400	COUPLING	1	
02	953-PH-02163	TUBE ASSY	1	
03	CHH30-25820	HOSE	2	
04	953-HS-03183	CLIP	4	
05	985-PH-02581	TUBE	1	
06	985-PH-02573	TUBE	1	
07	953-HS-11859	PLUG 9/16"-18UNF	9	
08	CHS01-12070	O-RING	2	
09	CFB27-21240	HEX. BOLT	108	
10	CFW01-11236	WASHER, SPRING	138	
11	985-HM-01016	PUMP ASSY	1	
12	CHS01-12130	O-RING	1	
13	CFS01-31235	HEX. SCREW	8	
14	CFW01-11030	WASHER, SPRING	3	
15	953-HS-02381	HOSE ASSY	5	
16	CHS01-13048	O-RING	34	
17	CFG03-24061	SPLIT FLANGE	64	
18	CFB27-21245	HEX. BOLT	34	
19	CFW05-12032	WASHER	92	
20	985-PH-02725	BLOCK STR	1	
21	CPL01-10810	PLUG 1/8" PT	8	
22	CFS01-31230	HEX. SCREW	24	
23	953-PH-03151	BRACKET	1	
24	CFS01-31225	HEX. SCREW	22	

FIG. 172 BRAKE OIL COOLER PIPING INST. (2/4)

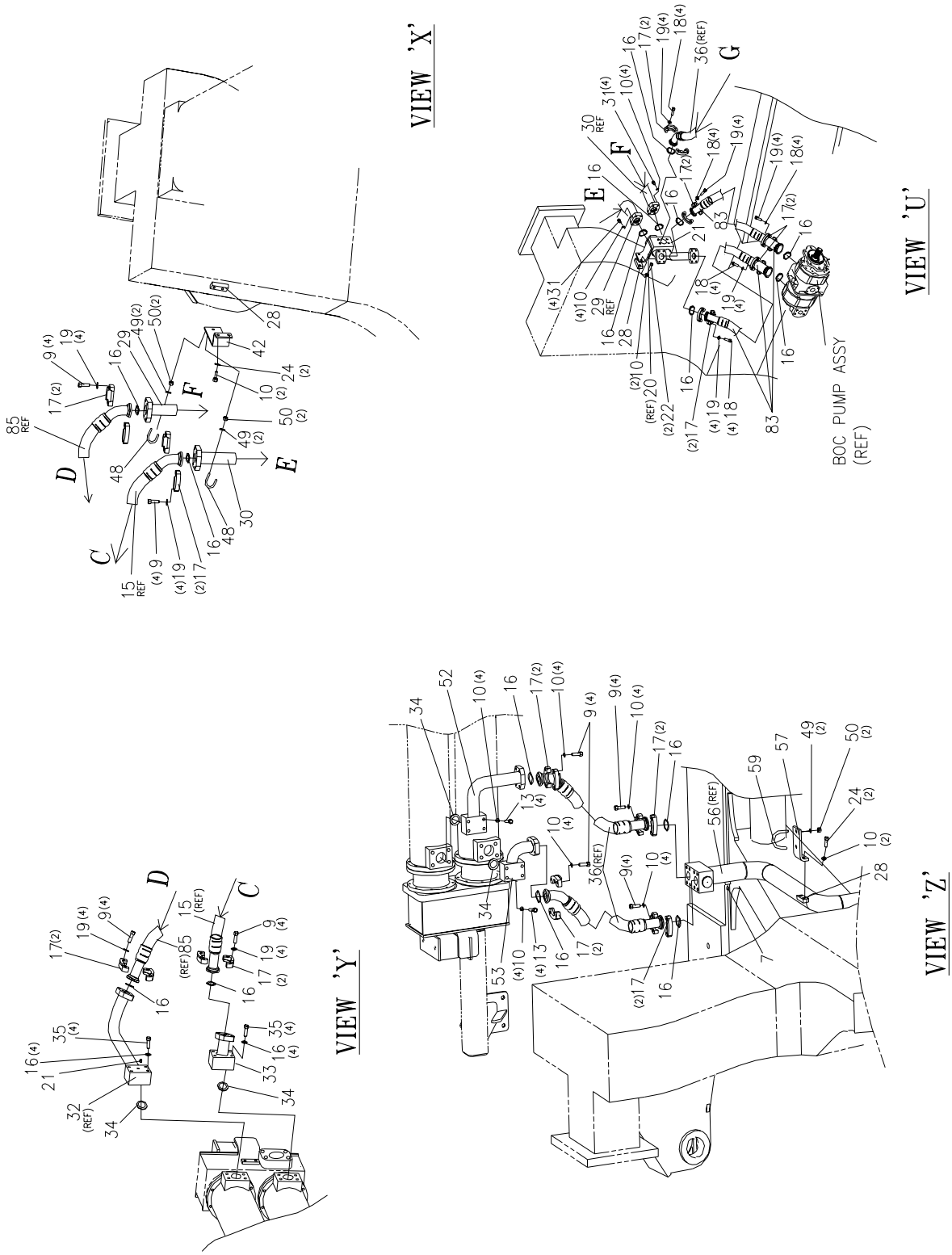

SLNO	PART NUMBER	DESCRIPTION	QTY	REMARKS
25	953-HS-03101	BRACKET	1	
26	CCC07-21079	CLAMP	2	
27	CFN28-11214	HEX. NUT	4	
28	CPW35-12080	SEAT	15	
29	953-HS-02421	TUBE ASSY	1	
30	953-HS-02438	TUBE ASSY	1	
31	CFB01-21240	HEX. BOLT	8	
32	953-HS-02843	TUBE	1	
33	985-HS-02865	TUBE STR	1	
34	CHS01-12060	O-RING	4	
35	CFB01-21275	HEX. BOLT	12	
36	985-PH-02427	HOSE ASSY	3	
37	953-HS-02446	TUBE ASSY	1	
38	953-HS-02454	TUBE ASSY	1	
39	CFS01-13045	HEX. SCREW	2	
40	953-HS-02462	TUBE ASSY	1	
41	CHH26-12410	HOSE ASSY	1	
42	985-PH-11175	PLATE	1	
43	778-AS-02053	CLIP	1	
44	985-PH-11061	PLATE	1	
45	CFS01-31020	HEX. SCREW	3	
46	953-HS-02292	TUBE ASSY	1	
47	985-PH-11053	BRACKET	1	
48	CCC07-24949	CLIP	9	

FIG. 172 BRAKE OIL COOLER PIPING INST. (3/4)

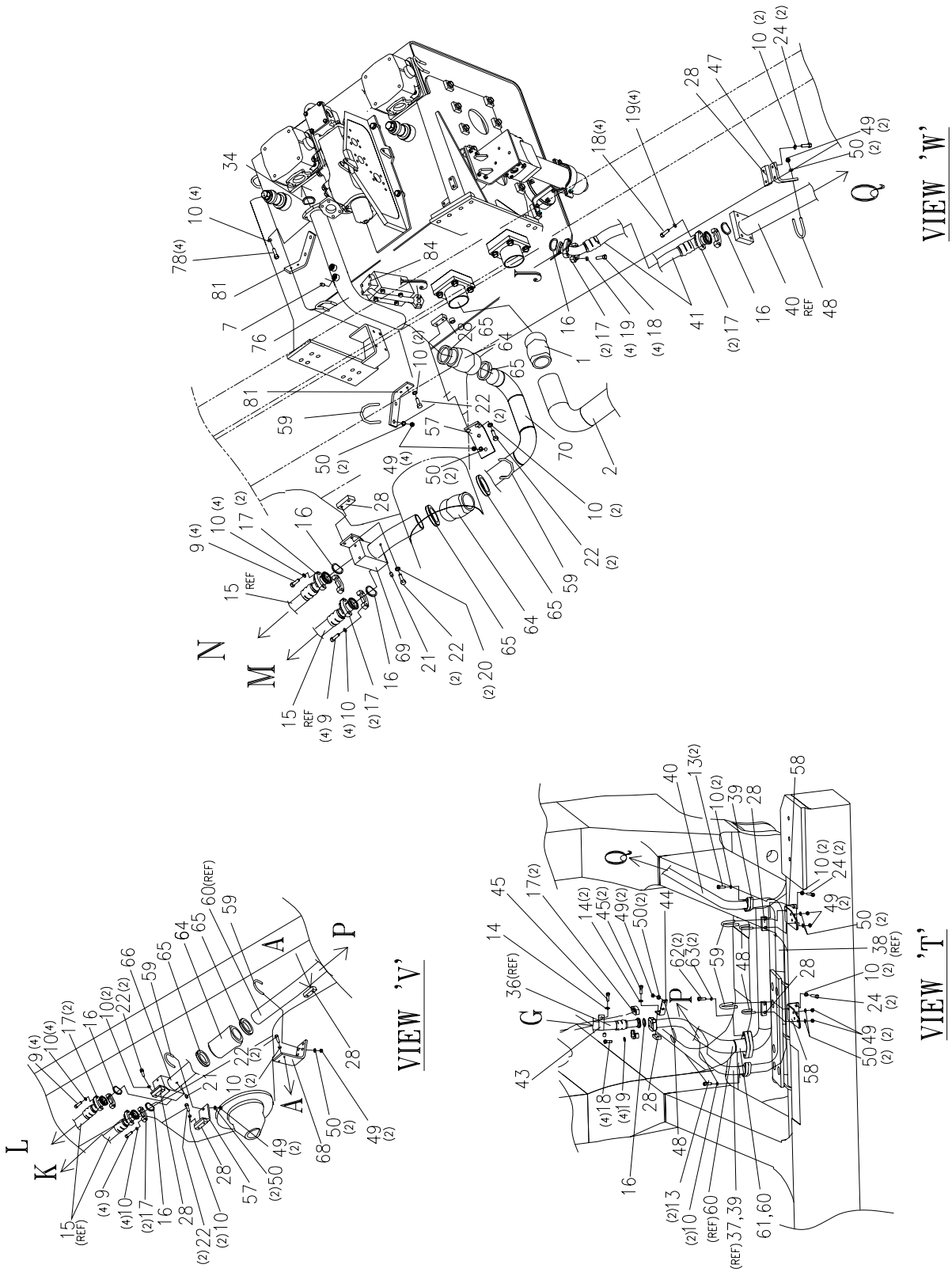

SLNO	PART NUMBER	DESCRIPTION	QTY	REMARKS
49	CFN28-11011	HEX. NUT	34	
50	CFW05-10032	WASHER	34	
51	953-HS-12522	BLOCK LH	1	
52	953-HS-02908	TUBE	1	
53	953-HS-02835	TUBE ASSY	1	
54	985-PH-11289	PLATE	1	
55	CFB02-21220	HEX. BOLT	4	
56	953-HS-02413	TUBE ASSY	1	
57	985-PH-11183	BRACKET	3	
58	985-PH-11426	BRACKET	2	
59	CCC07-27663	CLIP	8	
60	953-HS-02405	TUBE ASSY	1	
61	CHS01-12085	O-RING	1	
62	CFB07-11445	HEX. BOLT	2	
63	CFW01-11442	WASHER, SPRING	2	
64	CCC09-02400	COUPLING	3	
65	CCC09-52400	GASKET	6	
66	953-HS-02398	TUBE ASSY	1	
67	953-HS-12539	BLOCK RH	1	
68	953-HS-02916	BRACKET	1	
69	953-HS-02373	TUBE ASSY	1	
70	953-HS-02139	TUBE ASSY	1	
71	953-HS-02308	TUBE ASSY	1	
72	953-HS-02316	PIPE ASSY	1	

FIG. 172 BRAKE OIL COOLER PIPING INST. (4/4)

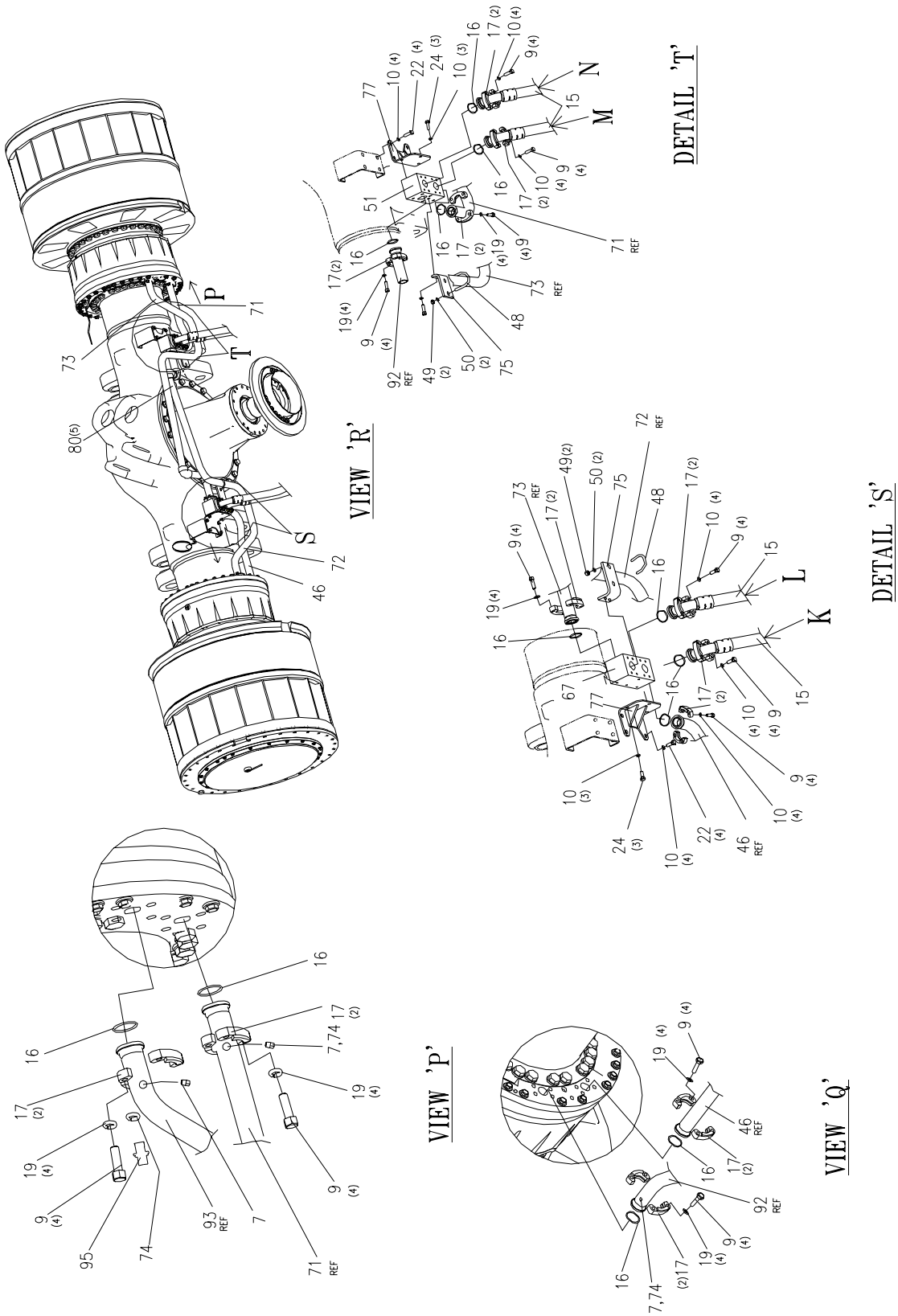

SLNO	PART NUMBER	DESCRIPTION	QTY	REMARKS
73	953-HS-02324	TUBE ASSY	1	
74	TL 3995	O-RING	5	
75	953-HS-12514	BRACKET	2	
76	953-PH-02147	TUBE ASSY	1	
77	985-PH-02605	BRACKET	2	
78	CFS01-31235	HEX. SCREW	4	
79	WA 2571	CAP NUT	2	
80	955-ZZ-10383	QUICK COUPLING	5	
81	985-PH-11029	BRACKET	1	
82	985-MF-03437	BRACKET	1	
83	953-HS-03142	HOSE ASSY	2	
84	953-PH-02155	TUBE STR	1	
85	953-HS-02487	HOSE ASSY	1	
	953-HSB-0258	O-RING KIT		
	953-HSB-0266	HOSE ASSY KIT		
	953-HSB-0274	PIPING KIT		

FIG. 173 OIL COOLER (STEERING & HOIST) INST.

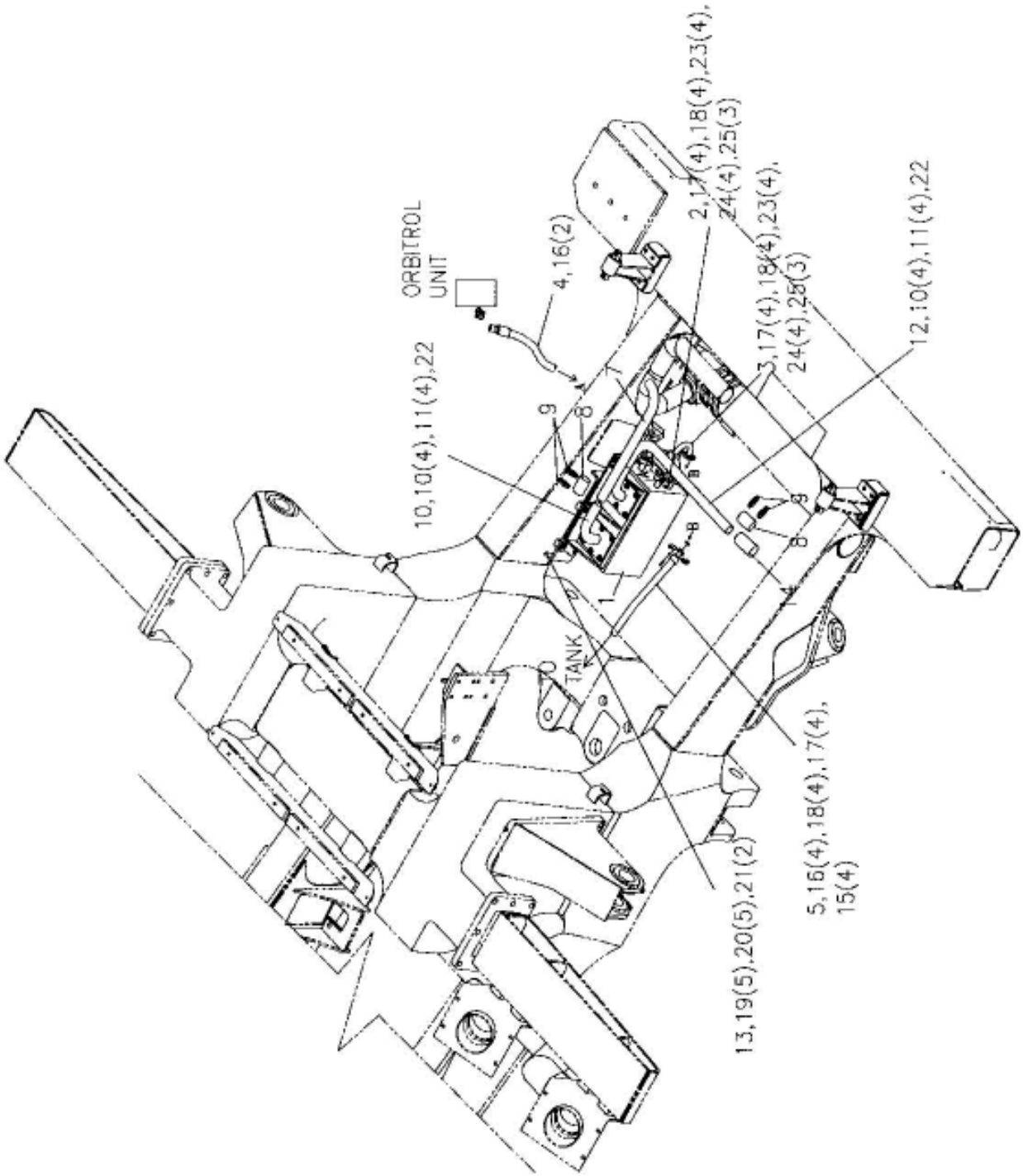

SLNO	PART NUMBER	DESCRIPTION	QTY	REMARKS
	953-PH-01086	OIL COOLER INSTALLATION		
01	125-OC-02002	OIL COOLER ASSY	1	
02	953-PH-02869	TUBE STR	1	
03	953-PH-02503	TUBE STR	1	
04	953-PH-02511	HOSE ASSY	1	
05	953-PH-02528	HOSE ASSY	1	
06	953-PH-02488	TUBE STR	1	
07	953-PH-12272	TUBE STR	1	
08	953-PH-62371	HOSE	2	
09	CCC01-06015	CLAMP	4	
10	CFS01-21030	HEX. SCREW	12	
11	CFW01-11030	SPRING WASHER	12	
12	953-PH-02496	TUBE STR	1	
13	953-PH-02536	BRACKET	1	
14	953-PH-12289	TUBE STR	1	
15	955-HS-02086	CLAMP ASSY	4	
16	CFG01-10045	SPLIT FLANGE	6	
17	CFB25-10032	BOLT	12	
18	CFW01-10929	SPRING WASHER	12	
19	CFB27-11650	BOLT	5	
20	CFW01-11648	SPRING WASHER	5	
21	CPW17-16032	PAD	2	
22	953-PH-62363	GASKET	2	
23	CFS01-31230	SCREW	8	
24	CFW01-11236	SPRING WASHER	8	
25	VG 9097	O-RING	7	

VIII
BODY

FIG. 180 BODY INSTALLATION

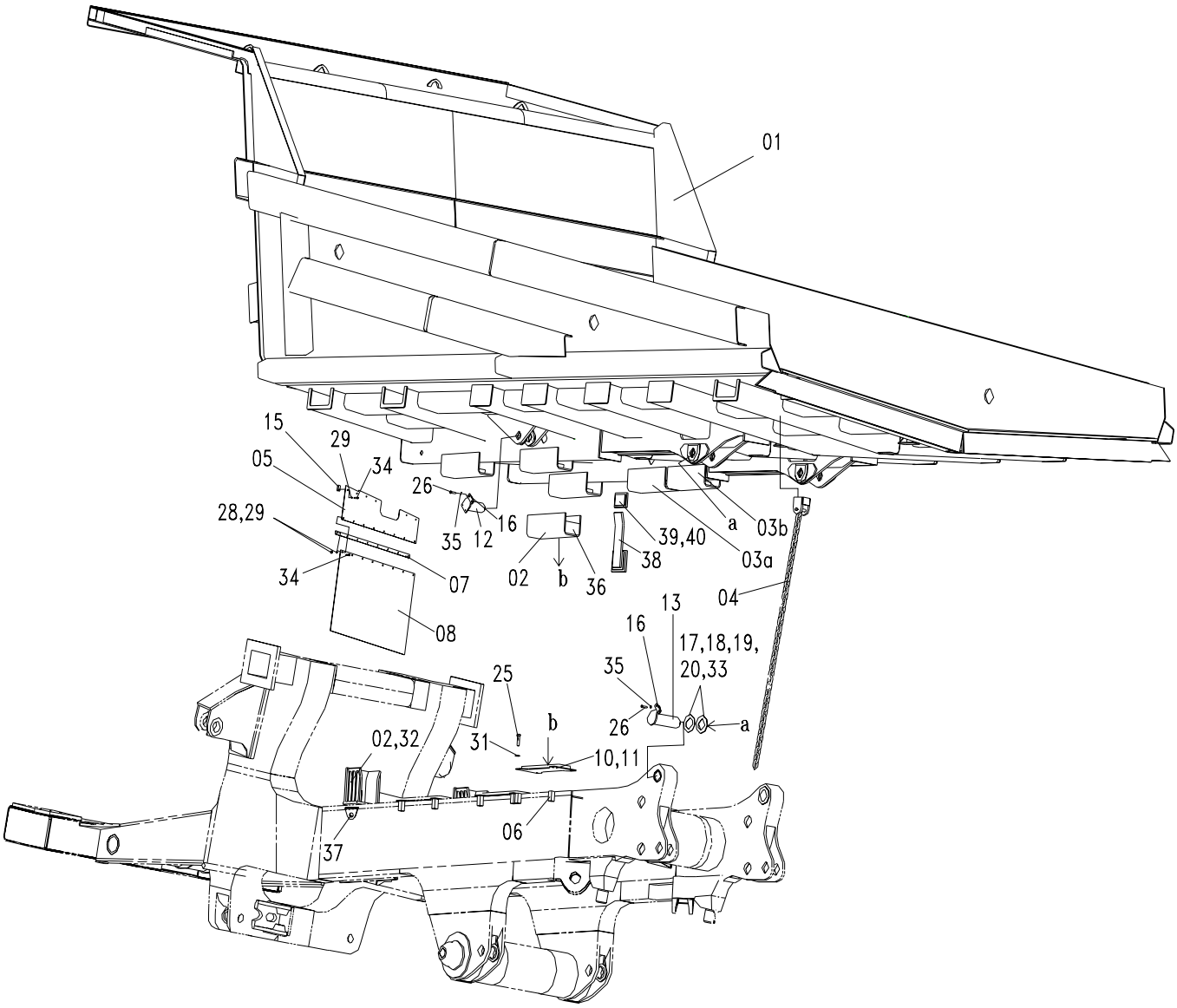

SLNO	PART NUMBER	DESCRIPTION	QTY	REMARKS
	953-BD-00012	BODY INSTALLATION		
01	953-BD-01203	BODY ASSY	1	
02	953-BD-01074	BODY GUIDE STR	2	
03	953-BD-01082	CHANNEL STR	2	
03a	953-BD-01155	CHANNEL STR	2	
03b	953-BD-01171	CHANNEL STR	2	
04	985-BD-02301	ROCK EJECTOR ASSY	2	
05	953-BD-11029	PLATE	2	
06	953-BD-11159	TAPPED PAD	(24)	
07	953-BD-11167	STRIP BODY	2	
08	953-BD-61128	RUBBER	2	
10	985-BD-02026	BODY PAD	4	
11	953-BD-01163	BODY PAD	2	
12	985-BD-02059	PIN	2	
13	985-BD-02067	PIN	2	
15	CPW25-12060	TAPPED PAD	12	
16	985-BD-11033	PLATE	4	
17	985-BD-11041	SPACER 2.24mm	AR	
18	985-BD-11058	SPACER 6.0mm	4	
19	985-BD-11066	SPACER 1.0mm	6	
20	985-BD-11074	SPACER 5.0mm	AR	
25	CFB01-22060	HEX. BOLT	20	
26	CFB07-21430	HEX. BOLT	8	
28	CFN01-11260	HEX. NUT	16	
29	CFW01-11236	WASHER, SPRING	28	
31	CFW05-20060	WASHER HARDNED	20	
32	953-ZZ-11572	SHIM (FOOT STR)	AR	
33	CSD01-00090	SEAL DUST	4	
34	CFS01-31235	HEX. SCREW	28	
35	CFW01-11442	WASHER, SPRING	12	
37	953-BD-10032	PLATE	2	
38	953-BD-01122	BODY GUIDE STR	(2)	
39	953-BD-10049	PLATE	2	
40	953-BD-10057	PLATE	2	

FIG. 181 BODY POSITIVE LOCKING

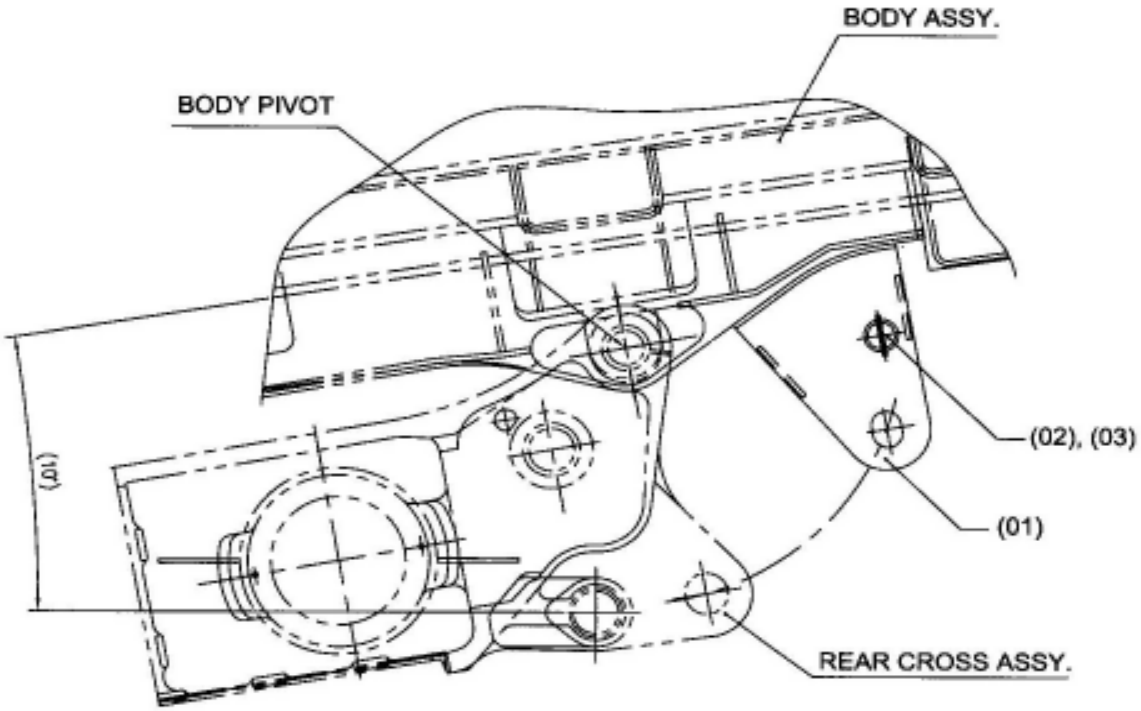

FIG. 1 BODY UNLOCKING POSITION

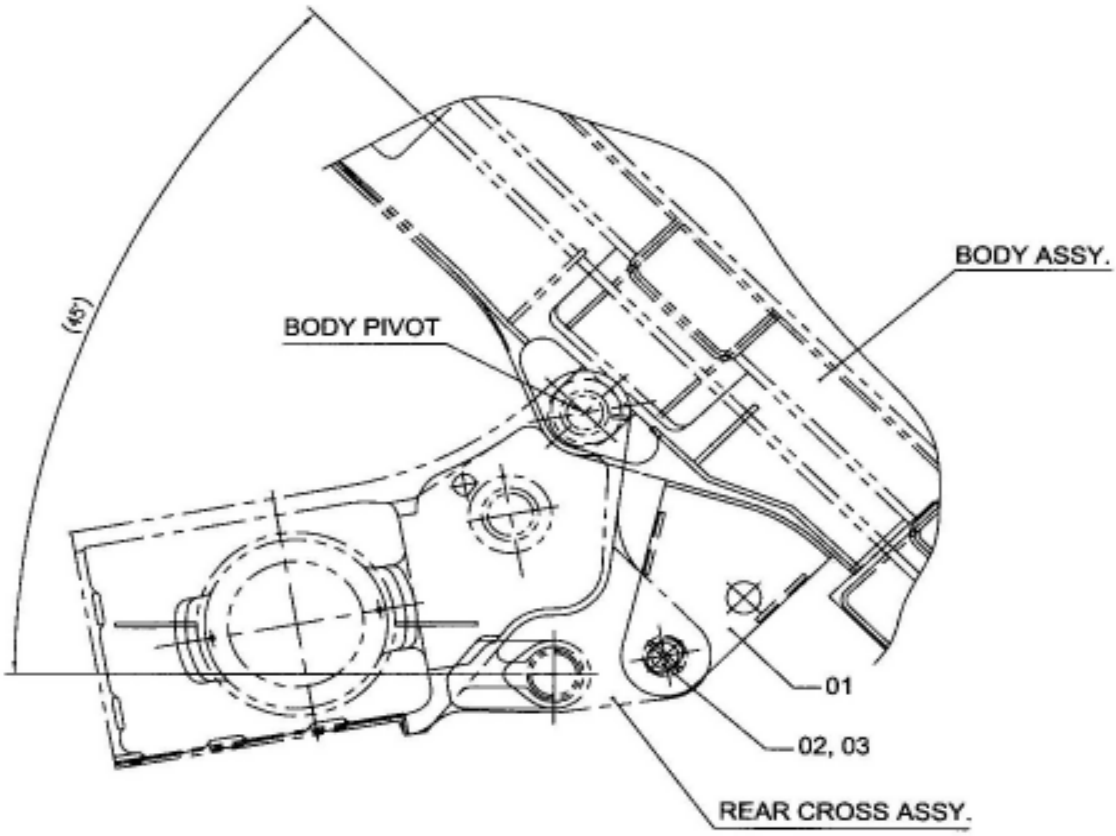

FIG. 2 BODY LOCKING POSITION

SLNO	PART NUMBER	DESCRIPTION	QTY	REMARKS
	953-BD-01188	BODY LOCKING INST. (PIN TYPE)		
01	953-BD-02054	BRACKET	2	
02	953-BD-02079	PIN STR.	2	
03	CPF01-00063	SPLIT PIN	2	

FIG. 182 BODY DOWN POSITION INDICATOR, MECH.(OPT.)

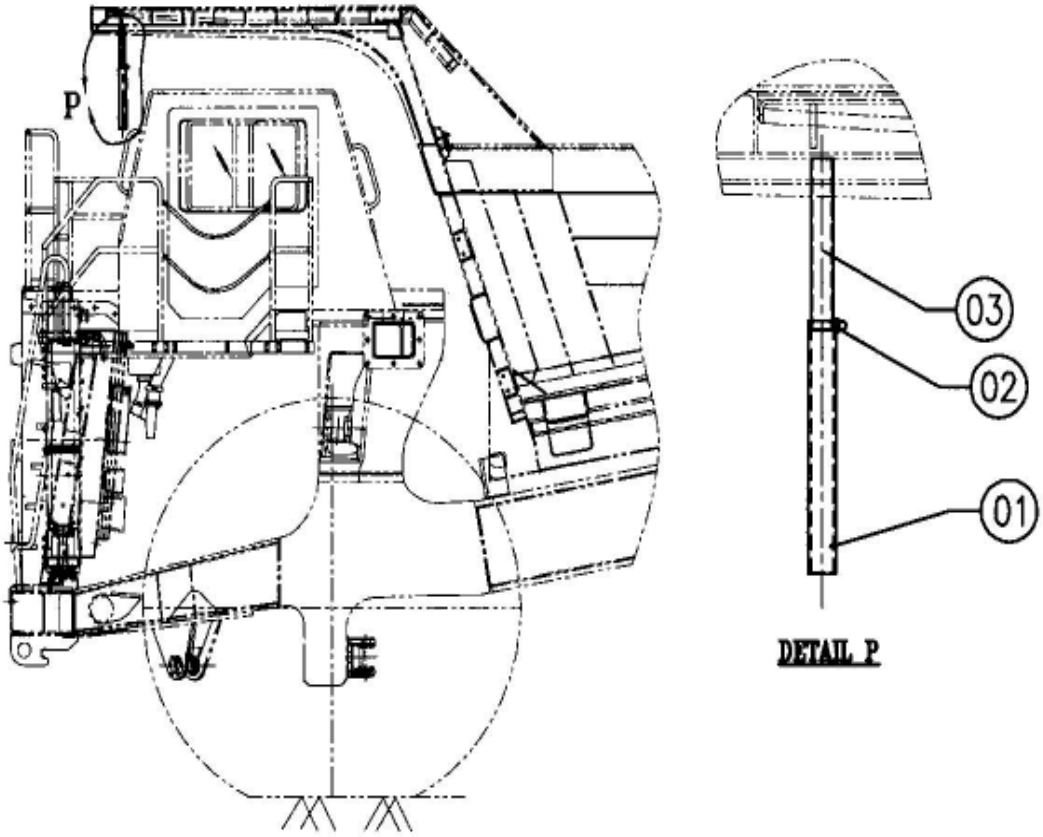

SLNO	PART NUMBER	DESCRIPTION	QTY	REMARKS
	953-BD-01099	BODY DOWN POSITION INDIICATOR		
01	985-BD-12484	HOSE	1	
02	CCC01-05012	CLAMP	1	
03	953-BD-11183	TUBE	1	

IX
FIRE PROTECTION SYSTEM

FIG. 185 FIRE PROTECTION SYSTEM

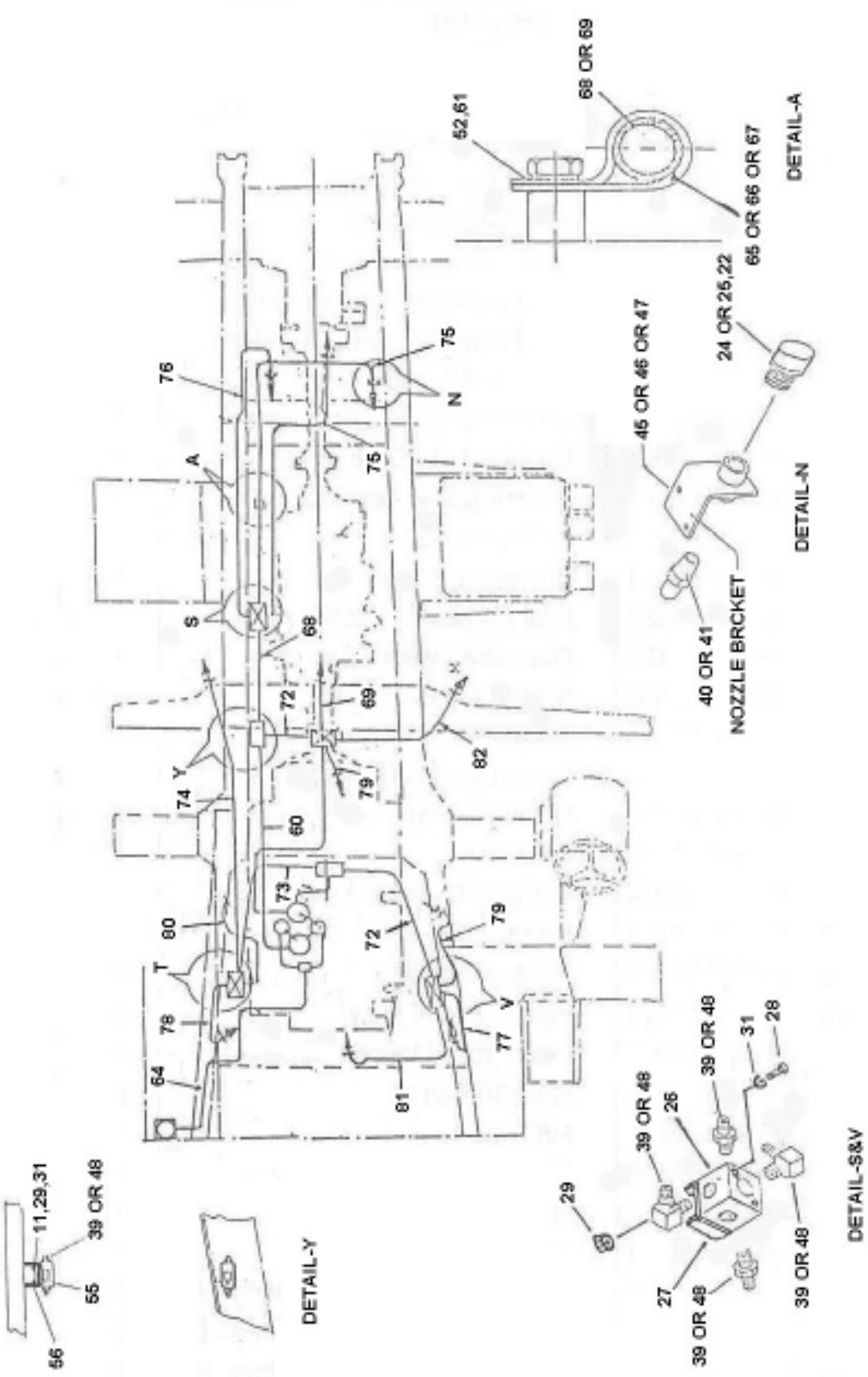

SLNO	PART NUMBER	DESCRIPTION	QTY	REMARKS
01	985-FP-02828	CONTROL UNIT	1	
02	985-FP-02123	HORN UNIT	1	
03	985-FP-02771	CABLE ASSY	1	
04	985-FP-02811	CABLE ASSY. MAIN	1	
11	CFS01-20850	HEX. SCREW	4	
13	985-FP-02463	SENSOR CABLE ASSY	1	
14	985-FP-02471	DCP CYLINDER	2	
15	985-FP-02796	NITROGEN CYLINDER	2	
16	985-FP-02788	PILOT CYLINDER ASSY	1	
17	985-FP-02496	OVER RIDE SWITCH (CABIN)	1	
18	985-FP-02503	SENSOR MOUNTING CLIP	75	
19	950-FP-71120	TEFLON BUSH	75	
20	985-FP-21158	DECAL(GROUND LEVEL)	1	
21	985-FP-21166	DECAL(CABIN)	1	
22	950-FP-71039	DUST CAP	12	
23	950-FP-02034	PORTABLE CYLINDER ASSY	1	
24	950-FP-11114	NOZZLE SLIT	4	
25	950-FP-11106	NOZZLE CONICAL	4	
26	985-FP-11179	PIPE CROSS (4-WAY)	4	
27	985-FP-11058	PIPE CROSS MOUNTING BRACKET	4	
28	CFSOI-20865	HEX. SCREW	8	
29	CFNOI-20840	NUT	12	
30	CFSOI-10820	HEX. SCREW	4	
31	CFW01-10825	SPRING WASHER	16	
32	985-FP-02511	CYLINDER MTGH.BRACKET	1	
33	985-FP-02528	CLAMP FOR CYLINDER MOUNTING-A	2	
34	985-FP-02536	CLAMP FOR CYLINDER MOUNTING-B	2	

FIG. 185 FIRE PROTECTION SYSTEM

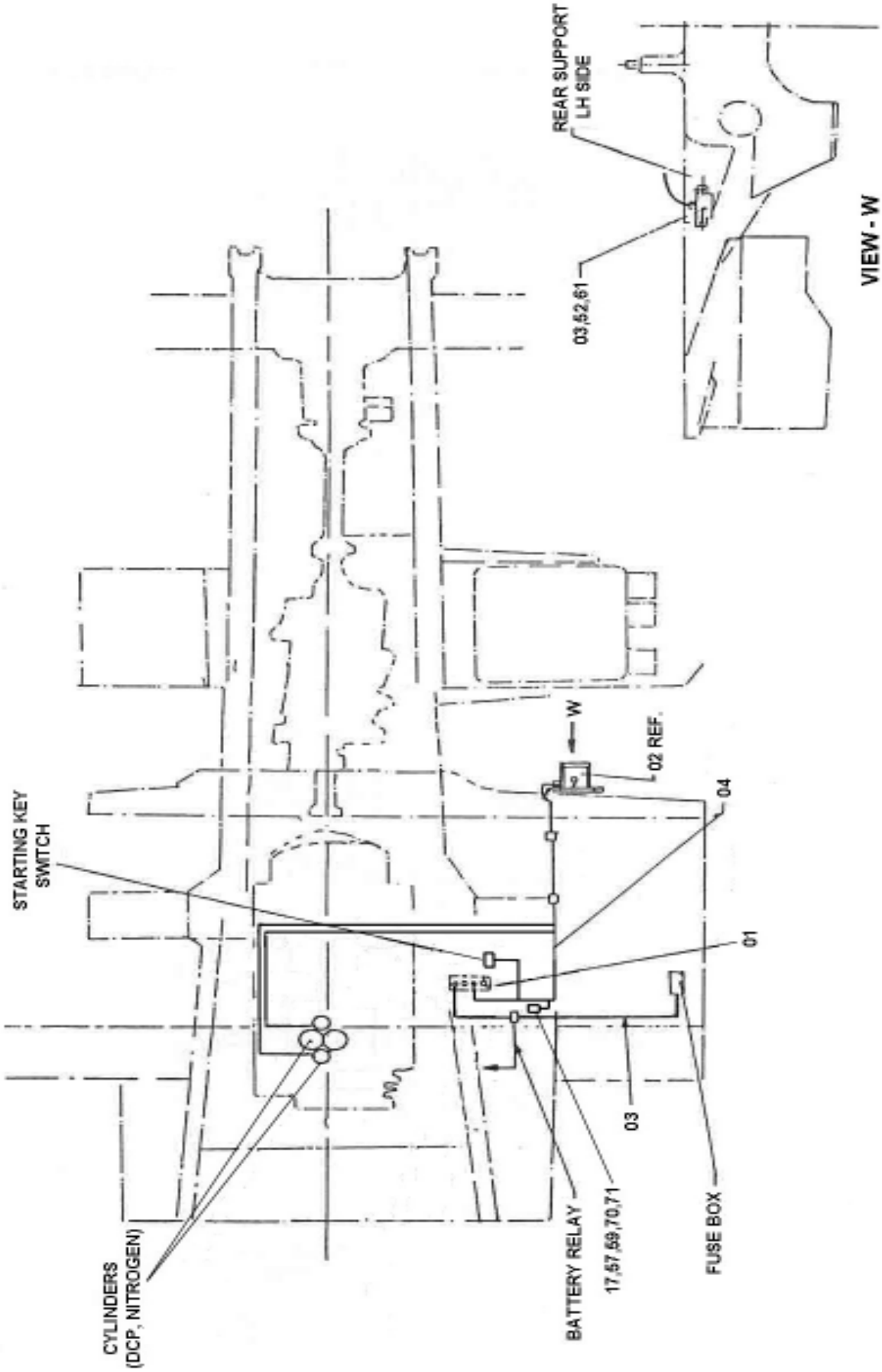

SLNO	PART NUMBER	DESCRIPTION	QTY	REMARKS
35	985-FP-02544	CLAMP FOR CYLINDER MOUNTING-E	4	
36	985-FP-02763	CONTROL UNIT MTG. BRACKET	1	
37	985-FP-11284	REGISTER UNIT (END OF LINE)	1	
38	985-FP-11568	PROTECTIVE COVER	2	
39	950-FP-21139	3/4" COUPLER	5	
40	950-FP-21191	1/2" ELBOW	17	
41	950-FP-21086	1/2" COUPLER	7	
42	985-FP-11551	TAPPED PAD(CONTROL UNIT)	1	
44	985-FP-11202	TAPPED PAD (CYLINDER BRACKET)	2	
45	985-FP-02067	NOZZLE BRACKET	9	
46	950-FP-02067	NOZZLE BRACKET-B	1	
47	985-FP-02382	NOZZLE BRACKET-A	2	
48	985-FP-11032	3/4" ELBOW	5	
49	985-FP-11219	SENSOR WIRE SUPPORTING BRACKET	1	
50	CFNOI-21084	NUT	16	
51	CFS01-11050	HEX. SCREW	16	
52	CFWOI-11030	SPRING WASHER	64	
53	CFS01-11225	HEX. SCREW	4	
54	CFWOI-11236	SPRING WASHER	4	
55	985-FP-11227	TEE 3/4" NPTF	2	
56	985-FP-11235	BRACKET FOR TEE MOUNTING	2	
57	985-FP-11243	OVERRIDE MOUNTING BRACKET	1	
58	985-FP-11251	1/4" TEE	1	
59	CFN01-10632	HEX. NUT	2	
60	985-FP-02585	3/4" HOSE ASSY	I	
61	CFS01-21020	HEX. SCREW	67	
62	985-FP-11276	PORTABLE CYL. MTG. BRACKET	1	

FIG. 185 FIRE PROTECTION SYSTEM

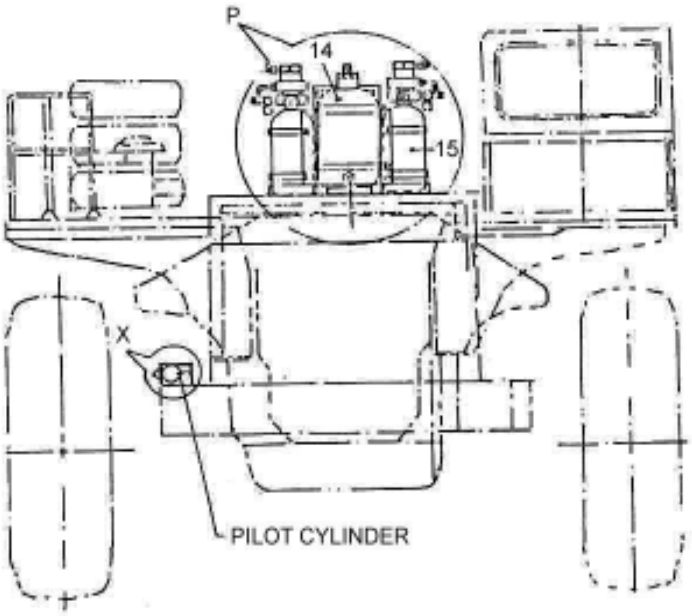

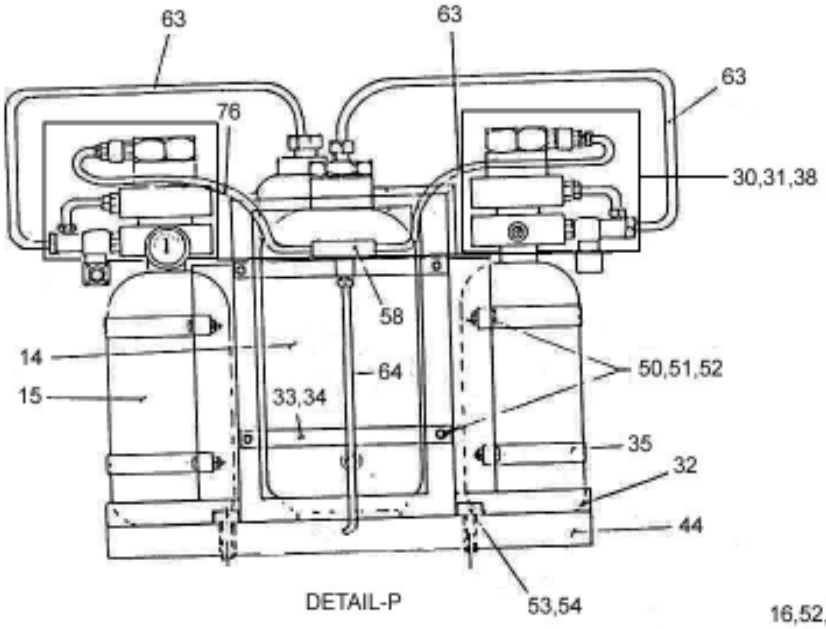

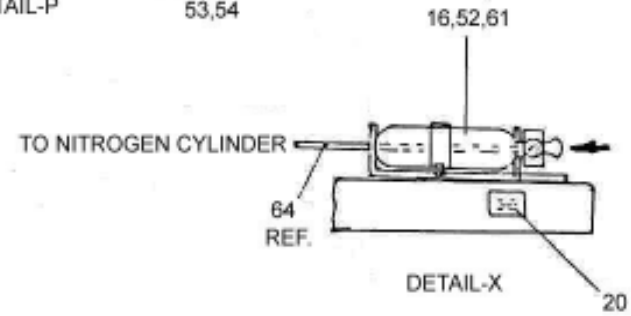

SLNO	PART NUMBER	DESCRIPTION	QTY	REMARKS
63	985-FP-02666	HOSE ASSY 1/4"	4	
64	985-FP-02658	HOSE ASSY 1/4"	1	
65	CCC06-22110	CLIP	24	
66	CCC06-32135	CLIP	10	
67	CCC05-16110	CLIP	12	
68	985-FP-02609	HOSE ASSY 3/4"	1	
69	985-FP-02625	HOSE ASSY 1/2"	1	
70	CFS01-10612	HEX. SCREW	75	
71	CFW01-10619	WASHER SPRING	75	
72	985-FP-02593	HOSE ASSY 3/4"	2	
73	985-FP-02617	HOSE ASSY 3/4"	2	
74	985-FP-02171	HOSE ASSY 1/2"	1	
75	985-FP-02188	HOSE ASSY 1/2"	2	
76	985-FP-02422	HOSE ASSY 1/2"	1	
77	985-FP-02439	HOSE ASSY 1/2"	1	
78	985-FP-02155	HOSE ASSY 1/2"	1	
79	985-FP-02414	HOSE ASSY 1/2"	2	
80	985-FP-02147	HOSE ASSY 1/2"	1	
81	985-FP-02122	HOSE ASSY 1/2"	1	
82	953-FP-02029	HOSE ASSY 1/2"	1	

FIG. 185 FIRE PROTECTION SYSTEM

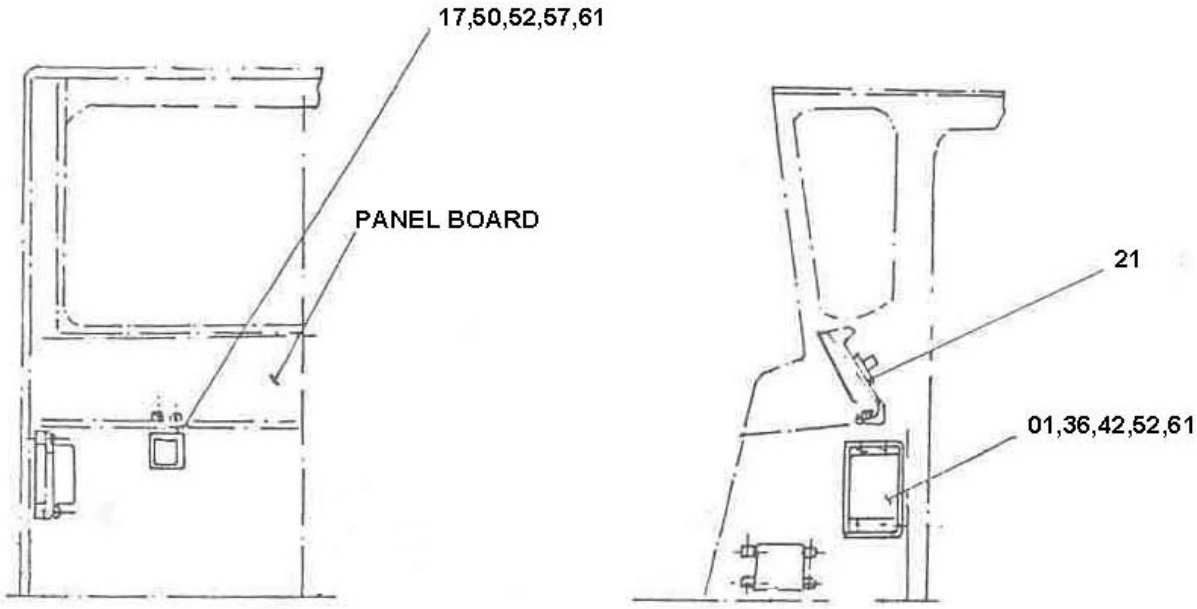

DETAIL - Q

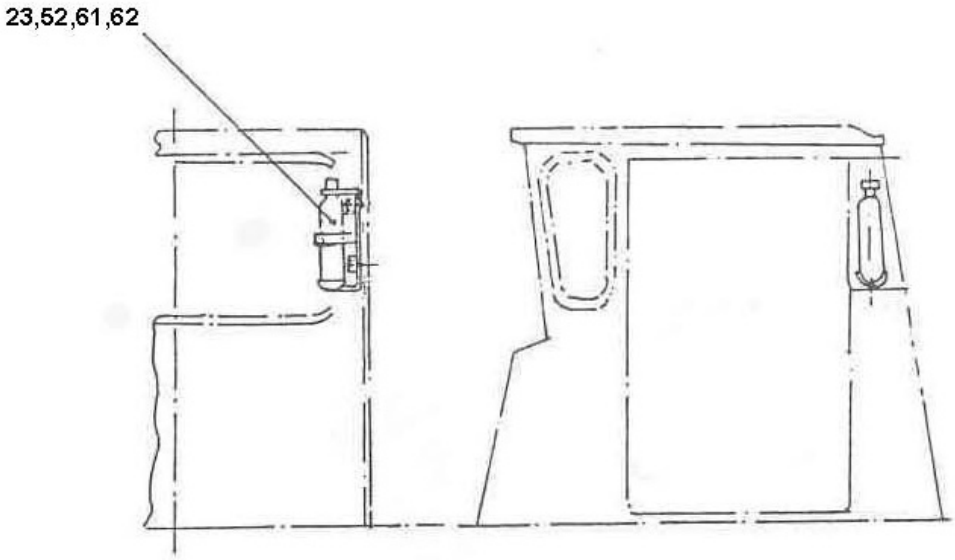

DETAIL - R

FIG. 185 FIRE PROTECTION SYSTEM

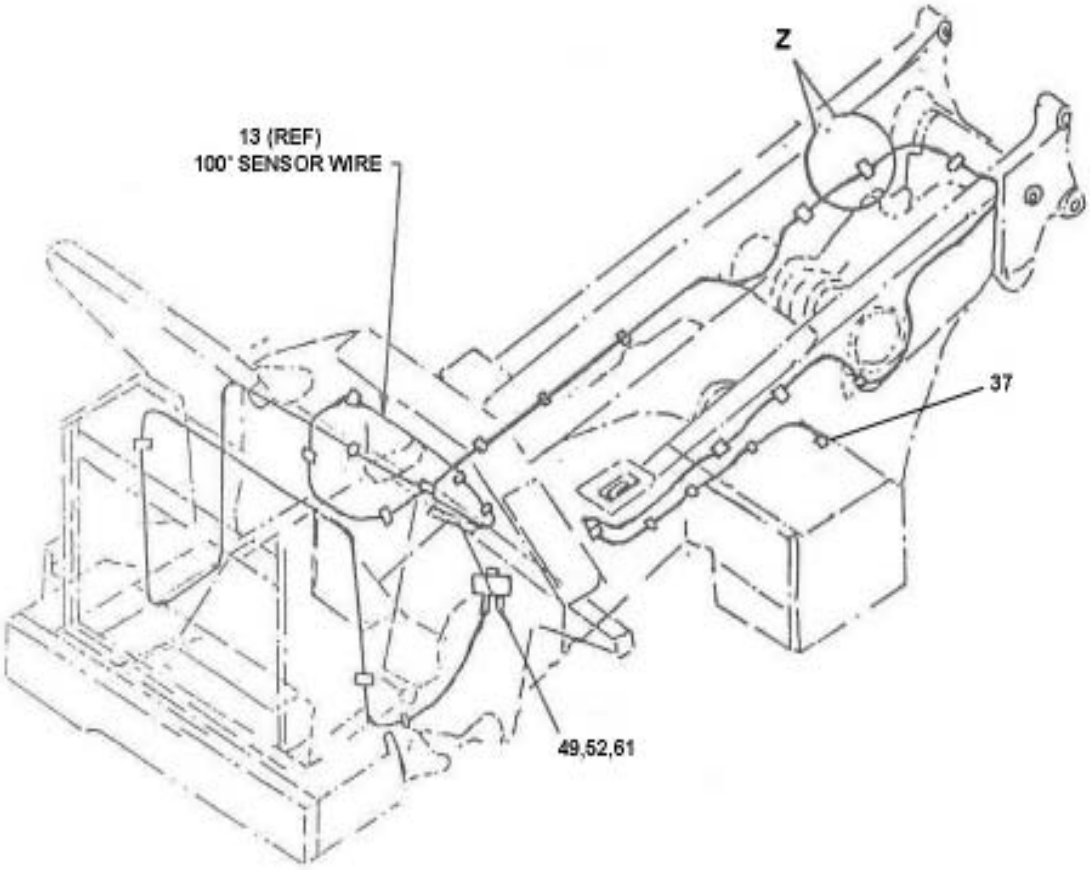

SENSOR WIRE ROUTING ASSY

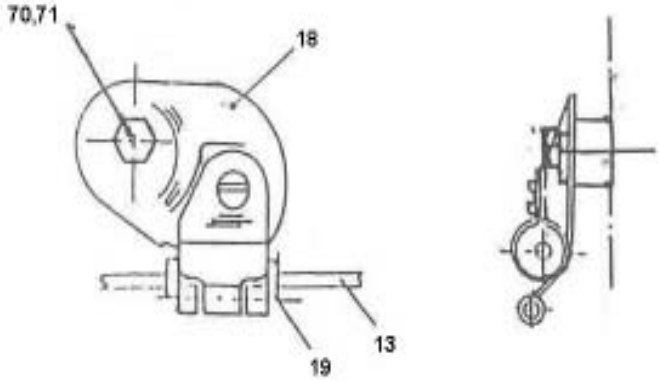

DETAIL - Z

FIG. 186 FIRE EXTINGUSHER INSTLN. (PORTABLE CYL. 5kg)

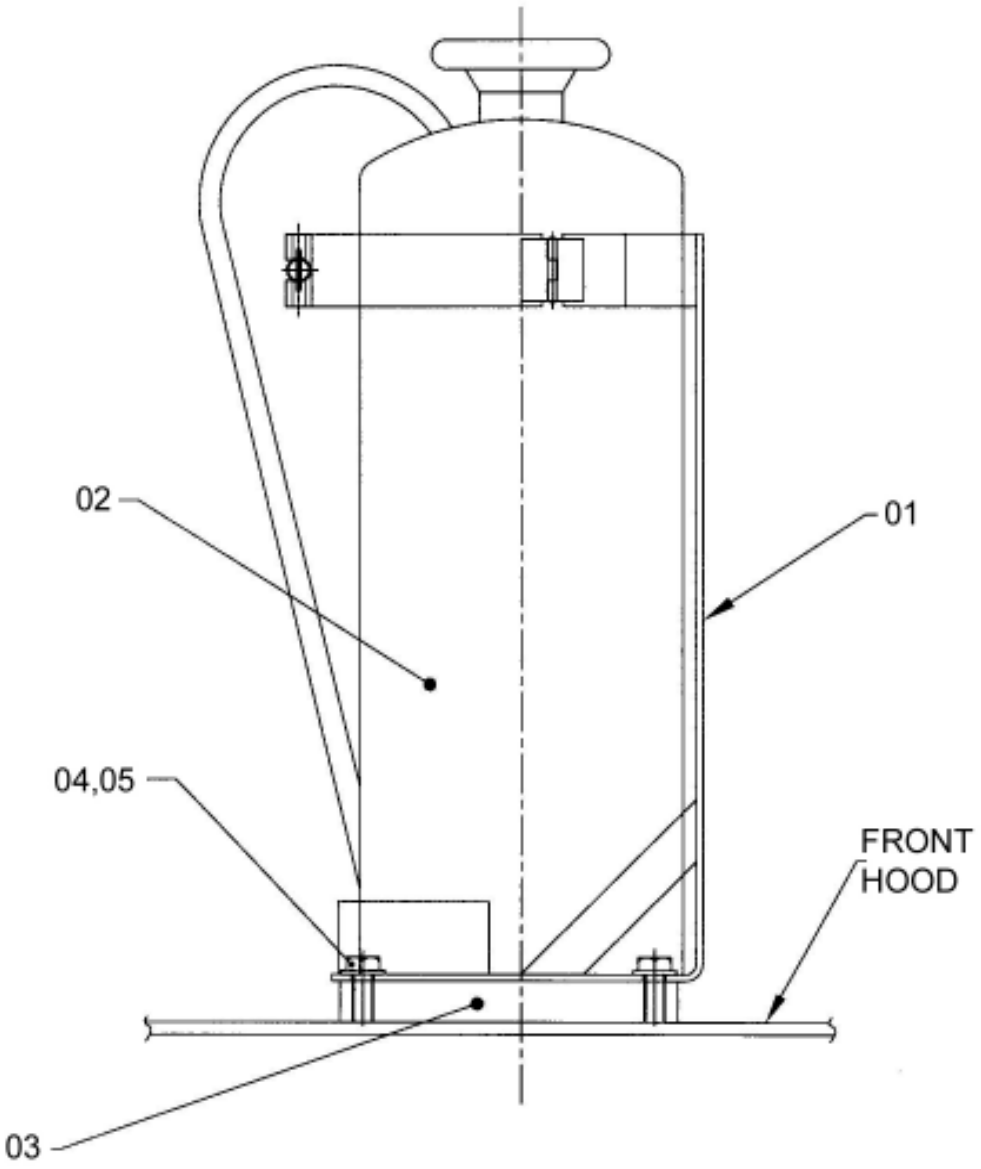

FIRE EXTINGUSHER INSTLN. (PORTABLE CYL. 5kg) **FIG NO. 186**

SLNO	PART NUMBER	DESCRIPTION	QTY	REMARKS
01	985-FP-02447	BRACKET STR	1	
02	985-FP-02455	PORTABLE FIRE EXTINGUSHER 5kg DCP	1	
03	955-EF-11096	TAPPED PAD	2	
04	CFS01-12025	HEX. SCREW	4	
05	CFW01-11030	SPRING WASHER	4	

X
CENTRALISED LUBRICATION SYSTEM

FIG. 190 ELECTRICAL ACCESSORIES

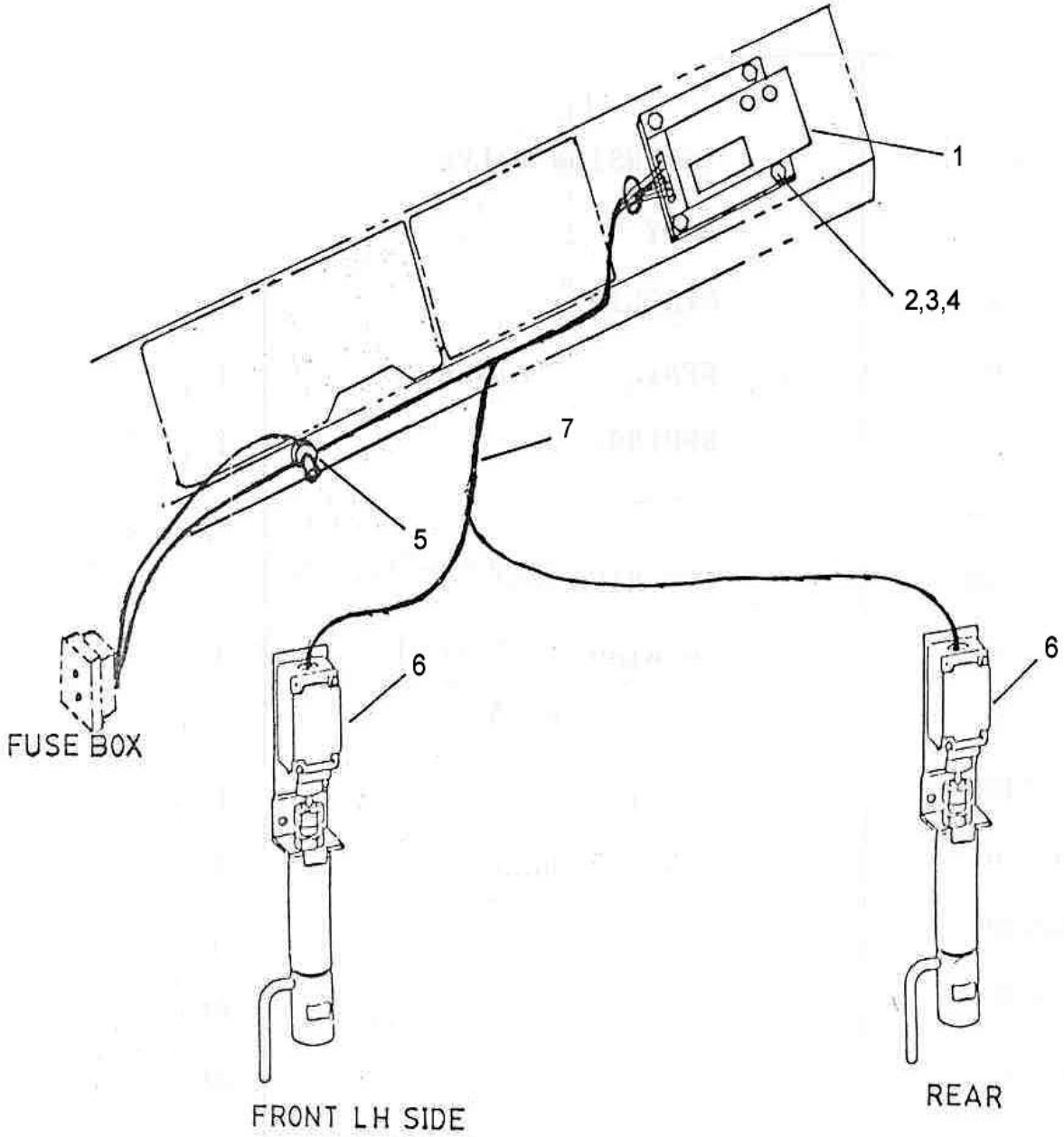

SLNO	PART NUMBER	DESCRIPTION	QTY	REMARKS
01	985-AL-02135	TIMER	1	
02	CFS01-10616	SCREW M6x16	4	
03	CFN01-10652	NUT, M6	4	
04	CFW01-10619	WASHER, M6	4	
05	561813040000	CABLE ASSY	1	
06	985-AL-02151	PRE. SWITCH	1	
07	985-AL-02143	SWITCH	1	

FIG. 191 PUMP STATION ASSY.

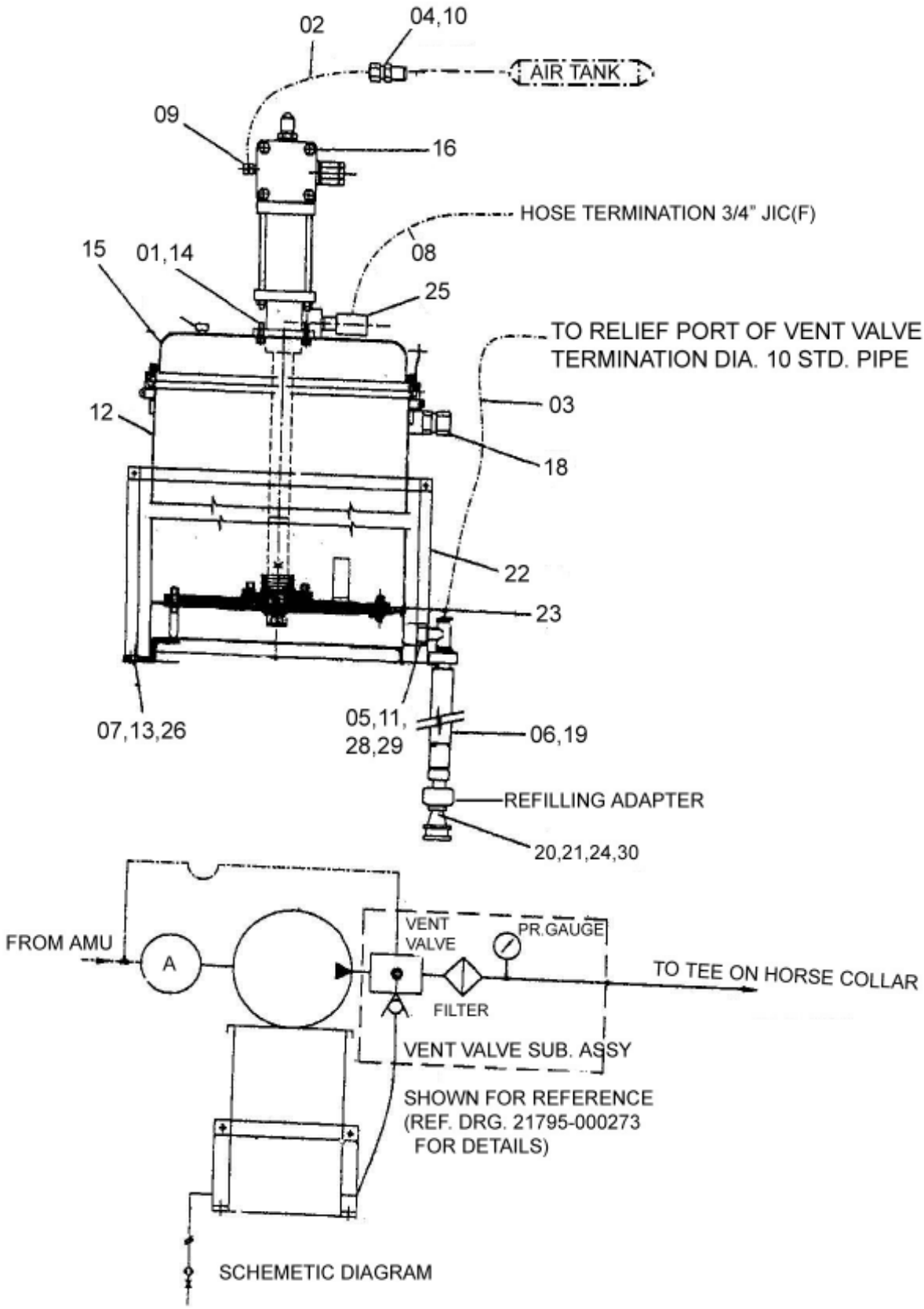

SLNO	PART NUMBER	DESCRIPTION	QTY	REMARKS
	953-AL-02017	PUMP STATION ASSY	1	
01	953-AL-12012	HEX. SOCKET HEAD CAP SCREW	4	
02	953-AL-12029	HOSE	1	
03	953-AL-12037	HOSE	1	
04	953-AL-12045	ADAPTOR	1	
05	953-AL-12053	ADAPTOR	1	
06	953-AL-12061	GE 10S	3	
07	953-AL-12078	PUNCHED WASHER	3	
08	953-AL-12086	HOSE	1	
09	953-AL-12094	WE 08L	1	
10	953-AL-12101	GE 08L	1	
11	953-AL-12118	TEE ADAPTOR	1	
12	953-AL-12126	DRUM	1	
13	953-AL-12134	SPRING WASHER	3	
14	953-AL-12142	GASKET	1	
15	953-AL-12159	DRUM COVER	1	
16	953-AL-03005	PNEUMATIC BARE PUMP	1	
17	953-AL-12167	AIR FILTER	1	
18	953-AL-12175	PIPE PLUG	1	
19	953-AL-12183	HOSE	1	
20	953-AL-12191	QUICK CHANGE COUPLER	1	
21	953-AL-12207	GE 10S	1	
22	953-AL-12215	CLAMPING RING	1	
23	953-AL-03013	FOLLOWER ASSY	1	
24	953-AL-03021	ANCHOR BLOCK ASSY	1	
25	953-AL-12223	ELBOW ADAPTOR	1	
26	953-AL-12231	HEX. BOLT	3	
27	953-AL-12248	HEX. NUT	3	
28	953-AL-12256	SEALING RING	1	
29	953-AL-12264	LOCK NUT	1	
30	953-AL-12272	ADAPTER	1	

FIG. 192 FRONT INJECTION LINE RH

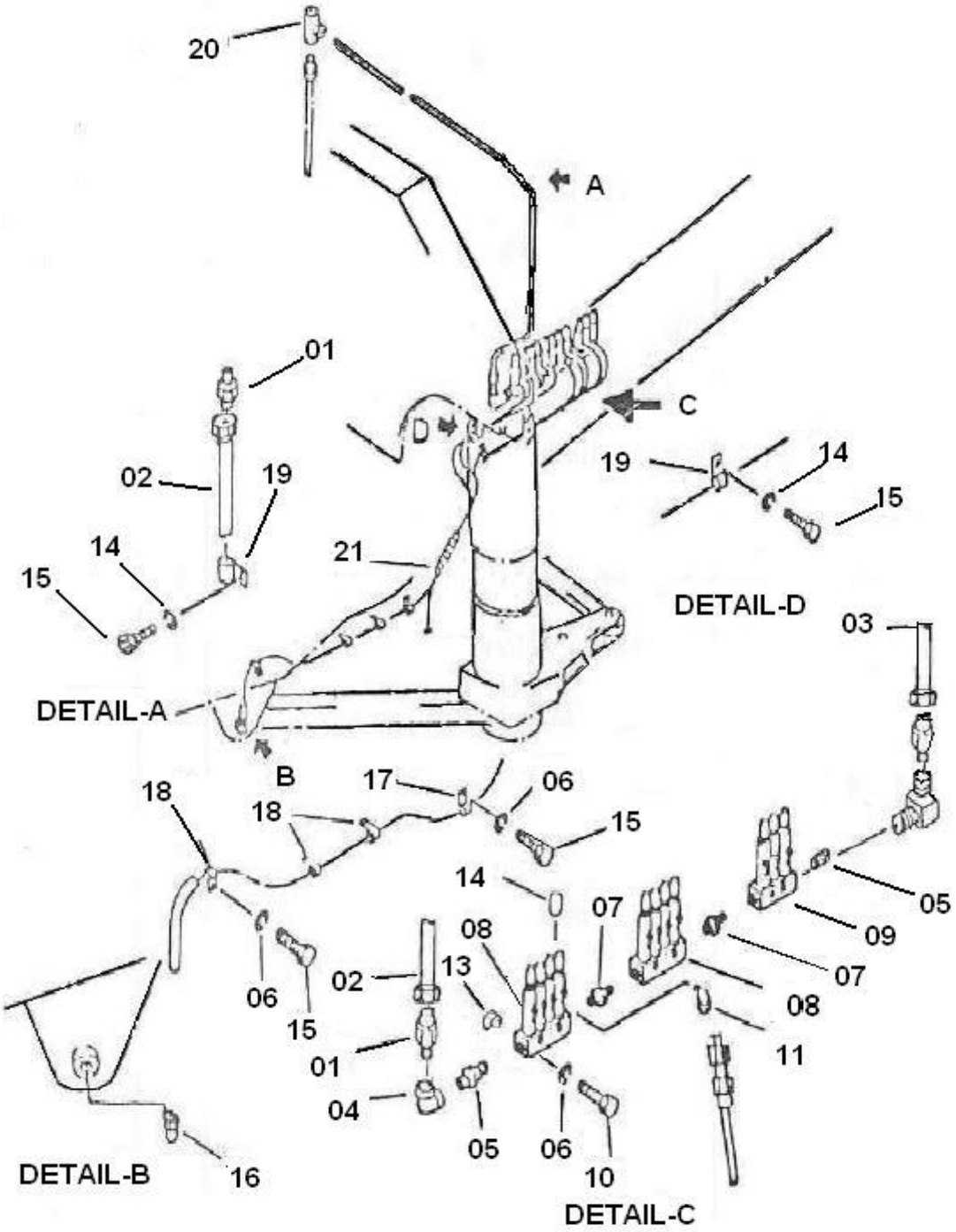

FRONT INJECTION LINE RH

FIG NO. 192

SLNO	PART NUMBER	DESCRIPTION	QTY	REMARKS
01	985-AL-11045	ADAPTOR	2	
02	985-AL-02021	HOSE ASSY.	1	
03	985-AL-02046	HOSE ASSY	1	
04	985-AL-11037	ELBOW	1	
05	985-AL-11183	NIPPLE	2	
06	CFW01-11030	SPRING WASHER	6	
07	985-AL-11126	NIPPLE	2	
08	985-AL-02216	INJECTOR	2	
09	985-AL-02224	INJECTOR	1	
10	CFB01-21050	BOLT	6	
11	990-AL-11092	MALE ELBOW	11	
12	CPW15-10022	SET (WELDED)	6	
13	CFN30-11009	HEX NUT	6	
14	985-AL-71148	CAP	11	
15	CFS01-21016	SCREW	9	
16	985-AL-11207	CONNECTOR	1	
17	CCC06-01814	CLIP	1	
18	CCC06-01014	CLIP	3	
19	CCC05-32135	CLIP	5	
20	985-AL-11191	TEE	1	
21	CCC05-38135	CLAMP	8	

FIG. 193 FRONT INJECTION LINE LH

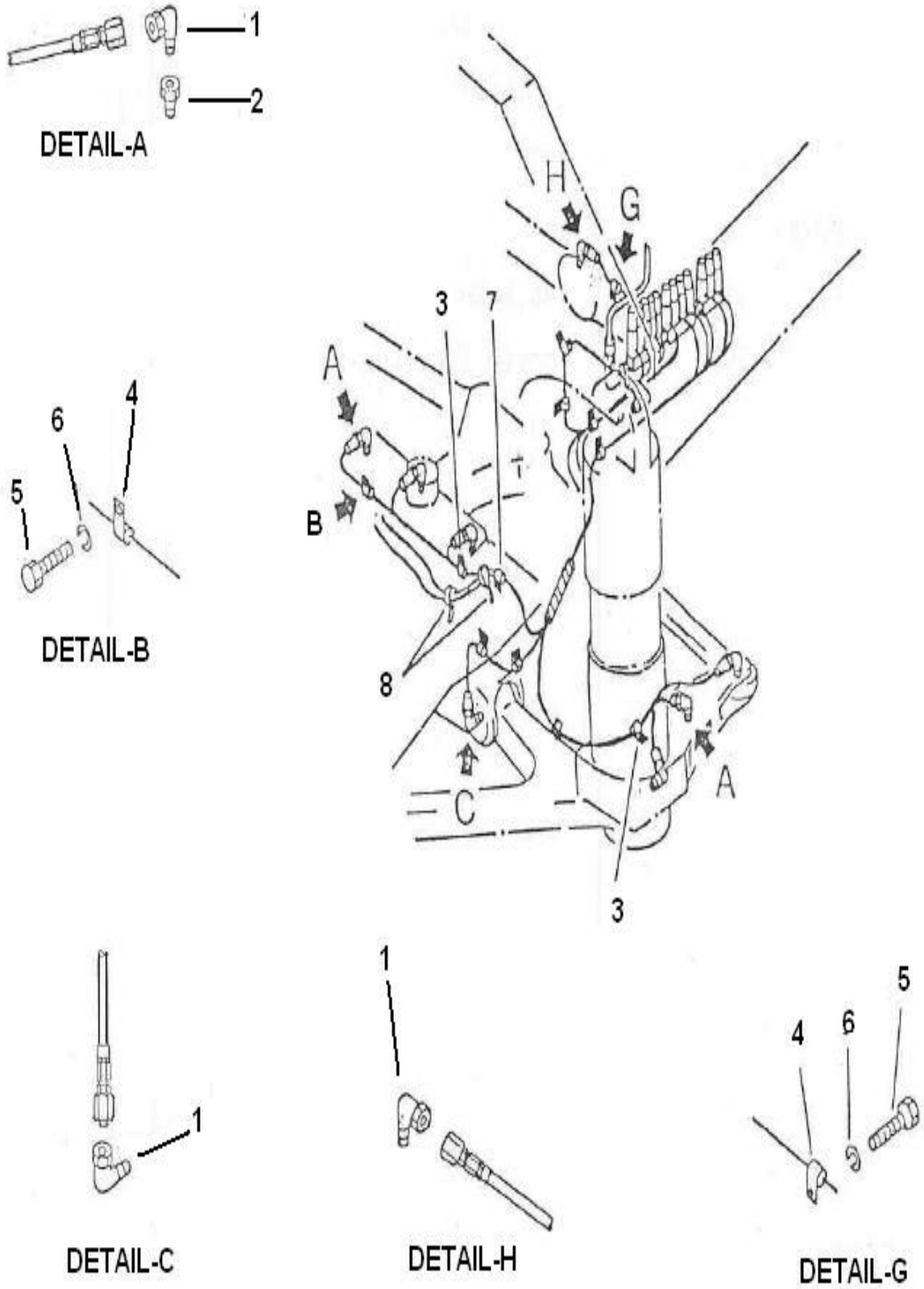

SLNO	PART NUMBER	DESCRIPTION	QTY	REMARKS
01	985-AL-11167	CONNECTOR	11	
02	985-AL-11256	BUSHING	5	
03	CCC06-01814	CLIP	1	
04	CCC06-01014	CLIP	7	
05	CFS01-21016	SCREW	9	
06	CFW01-11030	WASHER SPRING	9	
07	CCC06-01814	CLIP	2	
08	CCC10-00536	BAND	5	

FIG. 194 RH HOSE ASSY ROUTING

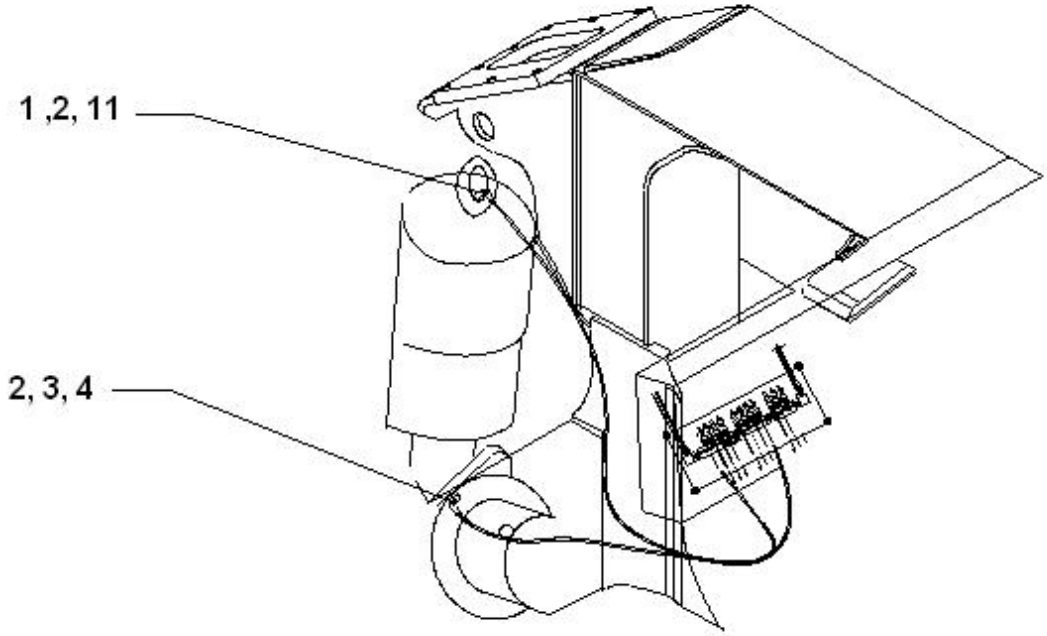

DETAIL-V

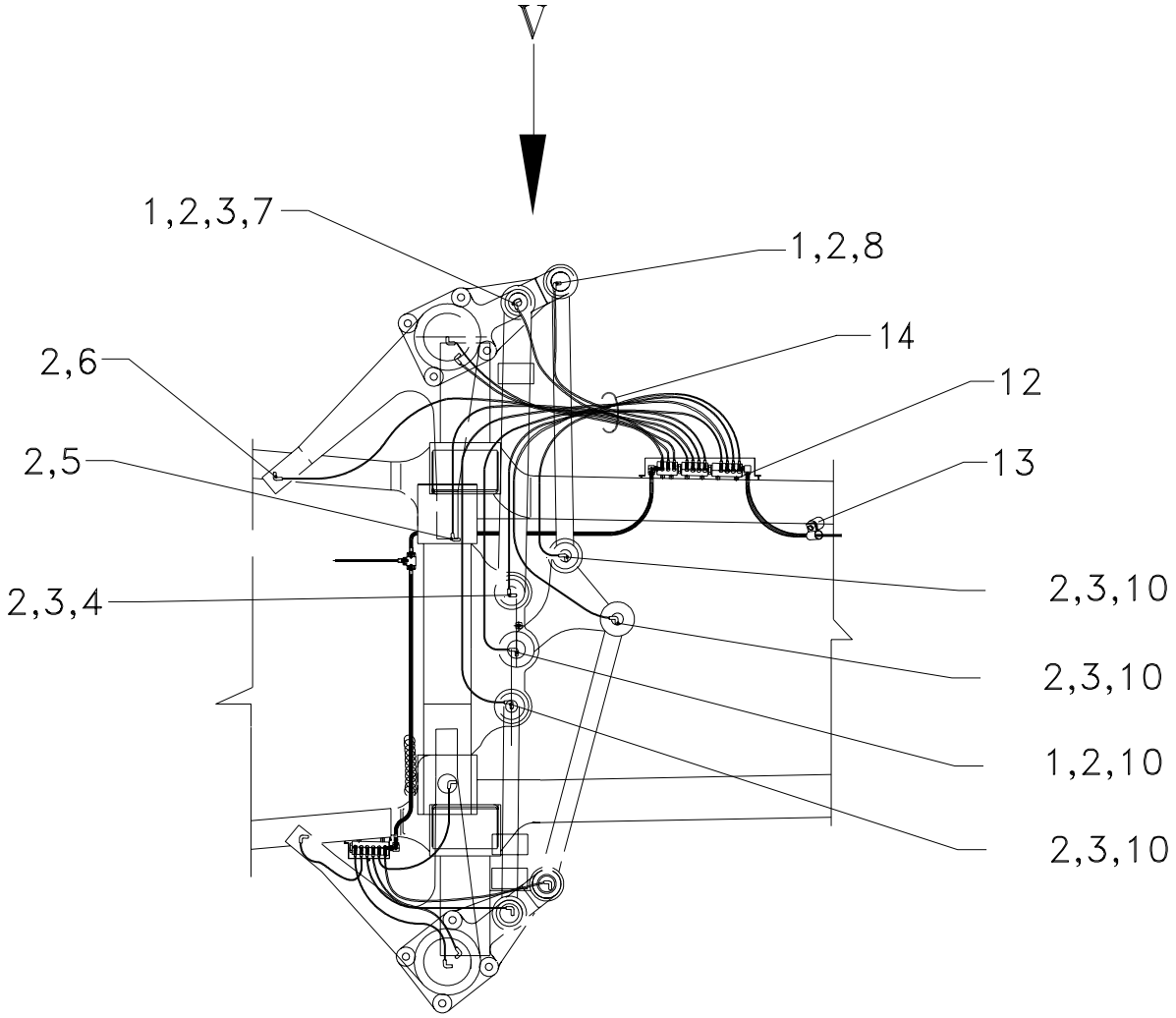

RH HOSE ASSY ROUTING

FIG NO. 194

SLNO	PART NUMBER	DESCRIPTION	QTY	REMARKS
01	953-AL-01394	HOSE ASSY.	1	
02	990-AL-11092	MALE ELBOW	6	
03	953-AL-01167	HOSE ASSY.	1	
04	953-AL-01061	HOSE ASSY.	1	
05	985-AL-74026	FLEXIBLE TUBE	1	
06	985-AL-11256	ADAPTOR	3	
07	953-AL-01094	HOSE ASSY.	1	
08	985-AL-11329	EXT. ADAPTOR	2	
09	953-AL-01086	HOSE ASSY.	1	
10	953-AL-01191	HOSE ASSY.	1	

FIG. 195 FRONT INJECTION LINE LH

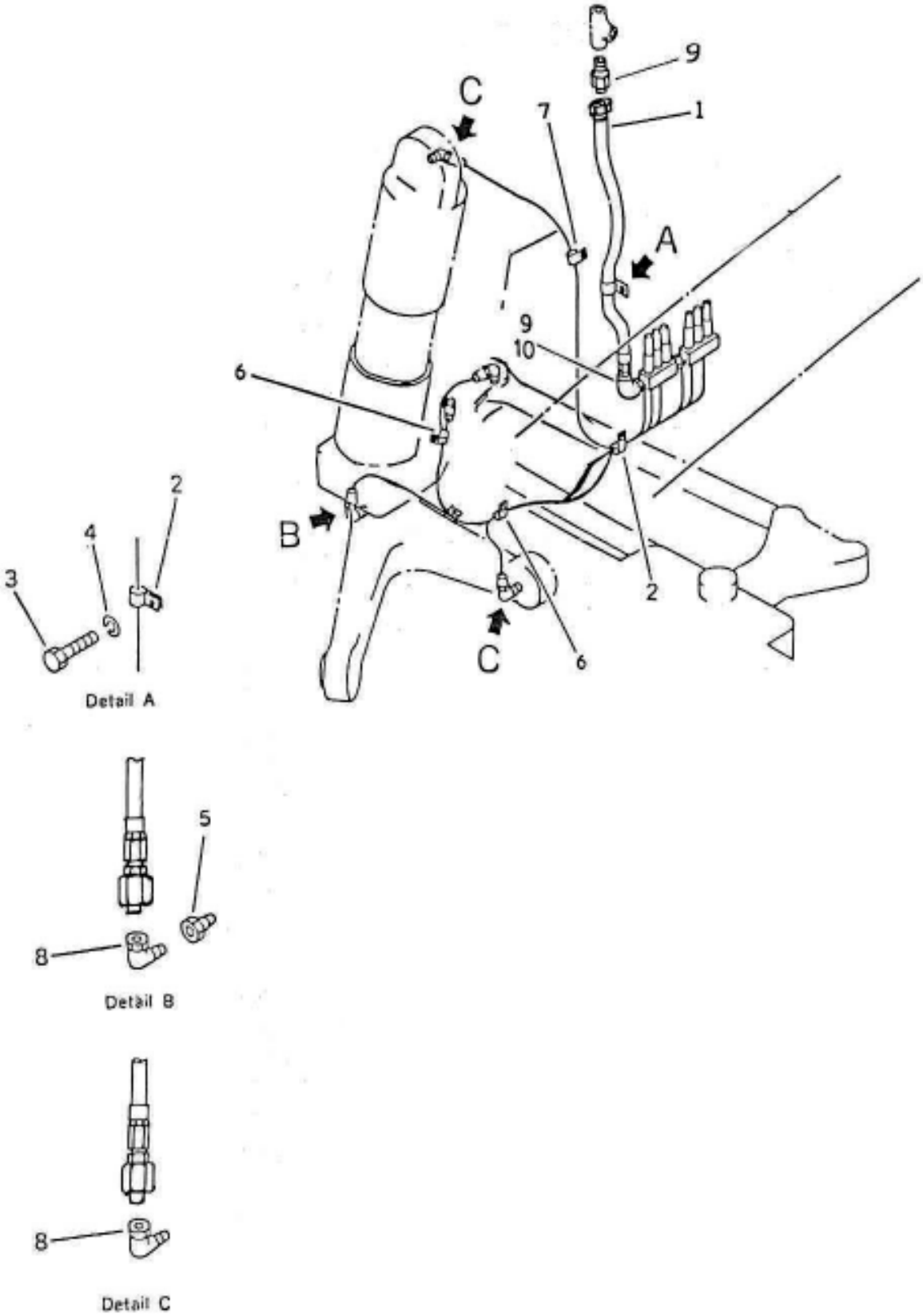

SLNO	PART NUMBER	DESCRIPTION	QTY	REMARKS
01	985-AL-02021	HOSE	1	
02	CCC05-32135	CLIP	2	
03	CFS01-21016	BOLT	10	
04	CFW01-11030	WASHER SPRING	10	
05	985-AL-11329	BUSHING	2	
06	CCC06-01814	CLIP	4	
07	CCC05-01014	CLIP	4	
08	985-AL-11167	CONNECTOR,ELBOW	6	
09	985-AL-11045	ADAPTOR	2	
10	985-AL-11037	ELBOW	1	
11	953-AL-01231	COVER STR(RH)	1	

FIG. 196 LH HOSE ASSY ROUTING

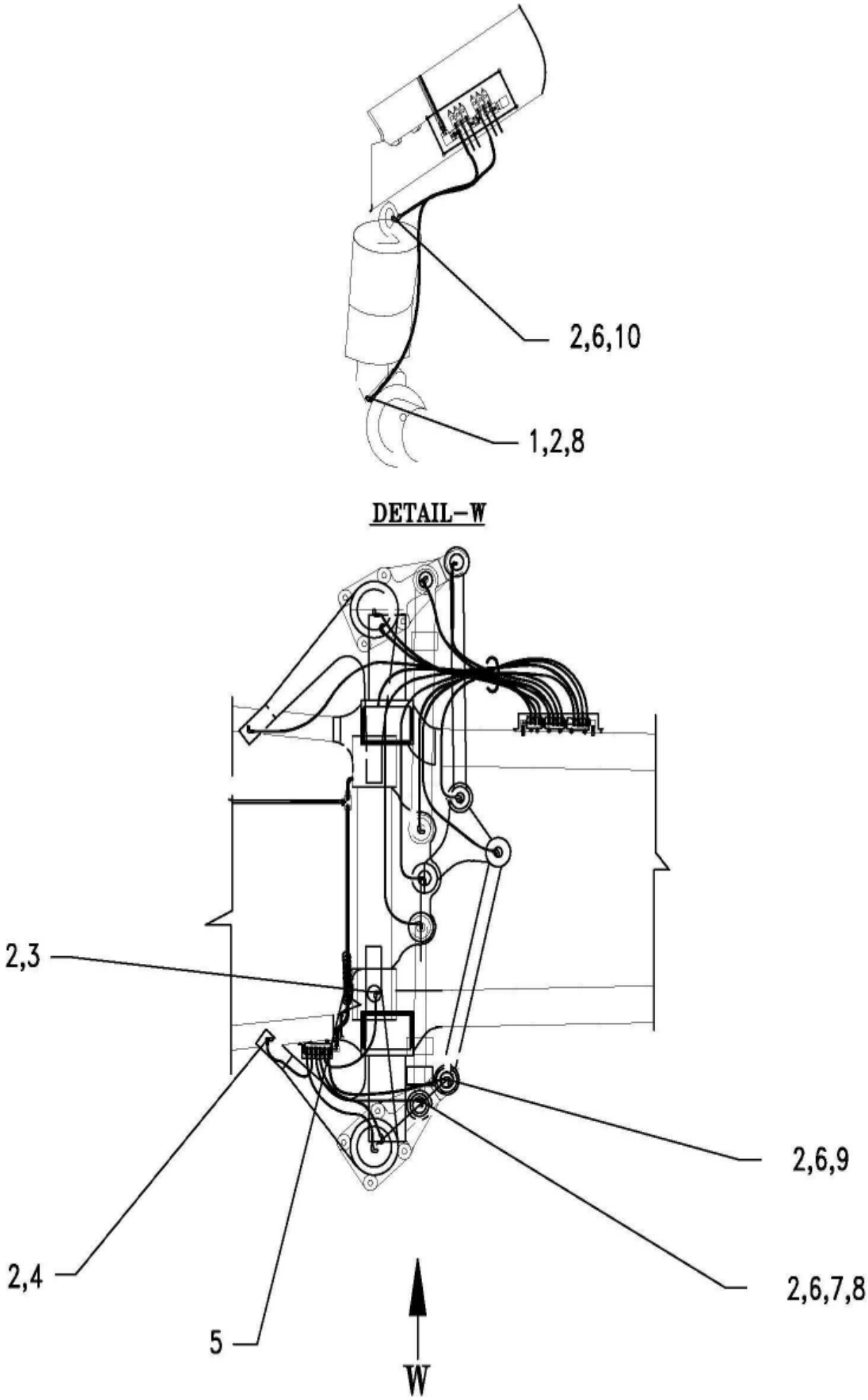

SLNO	PART NUMBER	DESCRIPTION	QTY	REMARKS
01	985-AL-11256	ADAPTOR	4	
02	990-AL-11092	MALE ADAPTOR	11	
03	985-AL-11329	EXTERNAL ADAPTOR	6	
04	953-AL-01142	HOSE ASSY.	2	
05	953-AL-01183	HOSE ASSY.	1	
06	953-AL-01094	HOSE ASSY.	1	
07	953-AL-01118	HOSE ASSY.	1	
08	953-AL-01086	HOSE ASSY.	1	
09	953-AL-01126	HOSE ASSY.	1	
10	953-AL-01134	HOSE ASSY.	3	
11	953-AL-01159	HOSE ASSY.	1	
12	CPW15-21022	SEAT A FOR INJECTOR	1	
13	CCC06-03014	CLIP	10	
14	TZB01-10004	BAND SELF TIE	1	

FIG. 197 REAR INJECTION LINE (1/2)

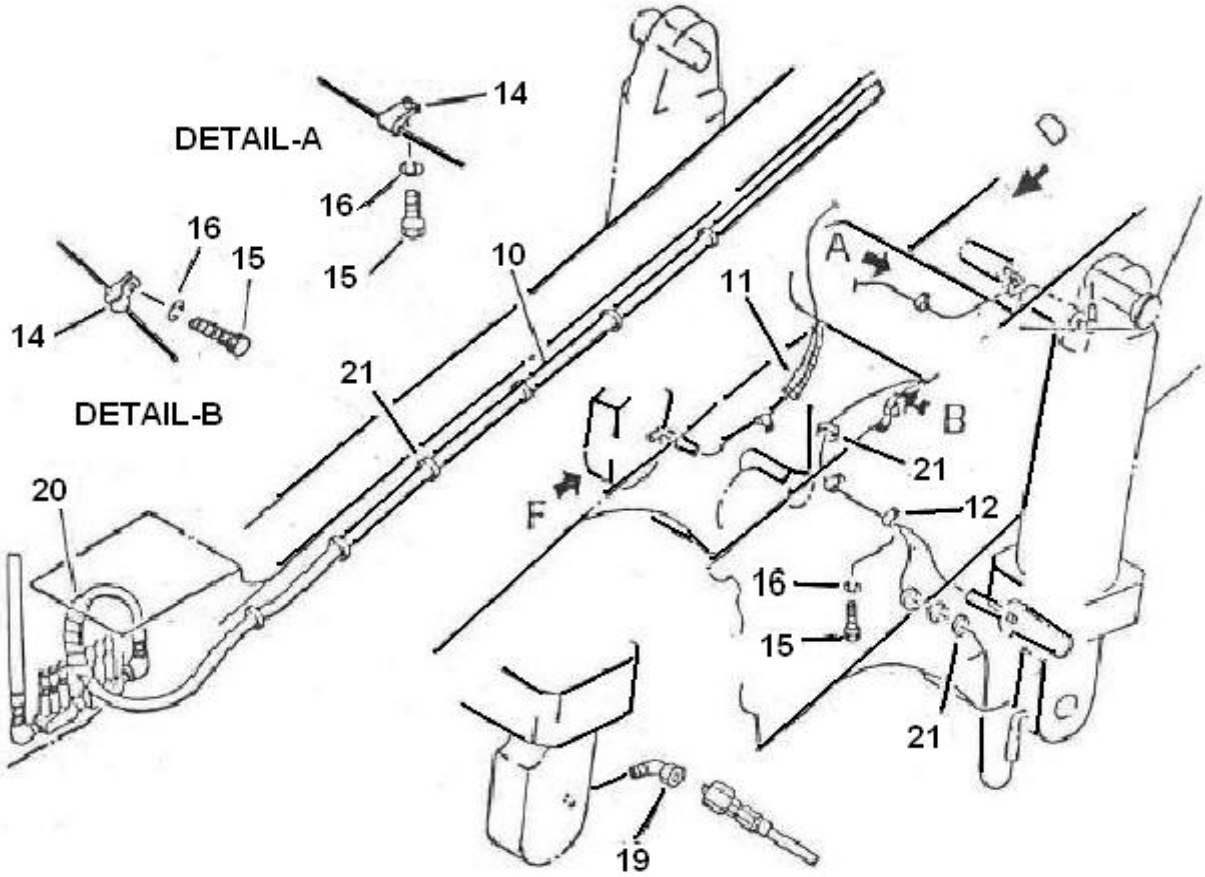

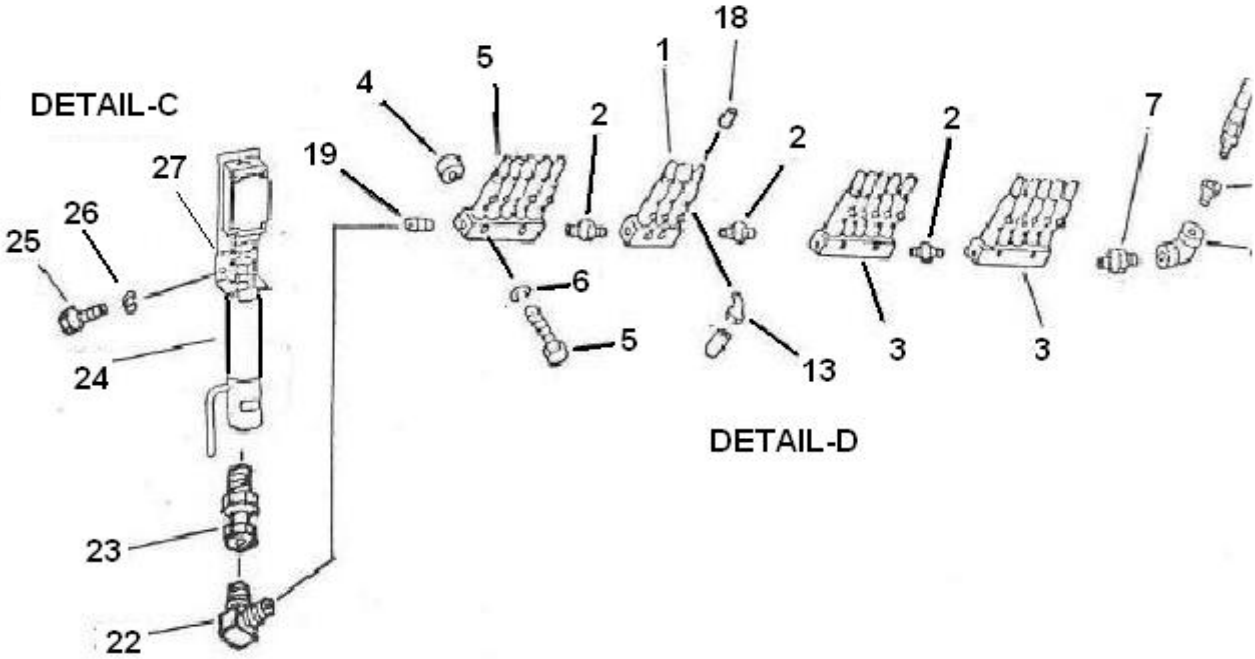

REAR INJECTION LINE (1/2) **FIG NO. 197**

SLNO	PART NUMBER	DESCRIPTION	QTY	REMARKS
01	985-AL-02224	INJECTOR	1	
02	985-AL-11126	NIPPLE	3	
03	985-AL-02208	INJECTOR	3	
04	CPW15-10022	SEAT(WELDED)	12	
05	CFBO1-21050	BOLT	12	
06	CFWO1-11030	WASHER,SPRING	8	
07	985-AL-11183	NIPPLE	2	
08	985-AL-11037	ELBOW	2	
09	985-AL-11353	ADAPTOR	1	
10	985-AL-02046	HOSE	1	
11	985-AL-71294	SPIRAL TUBE	3	
12	CCC06-01814	CLIP	4	
13	985-AL-11159	CONNECTOR	18	
14	CCCO6-01014	CLIP	8	
15	CFSO1-21016	SCREW	8	
16	CFWO1-11030	WASHER,SPRING	8	
17	985-AL-11134	PLUG	1	
18	985-AL-11142	CAP	18	
19	990-AL-11092	CONNECTOR	3	
20	985-AL-71318	SPIRAL TUBE	1	
21	CCC10-00538	BAND	5	
22	985-AL-11223	ELBOW	1	
23	985-AL-11215	STRAIGHT CONNECTOR	1	
24	985-AL-02151	PRESSURE SWITCH	1	
25	CFSO1-10616	M6x16 SCREW	2	
26	CFWO1-10619	M6,WASHER	2	
27	985-AL-11361	PRESSURE SWITCH BRACKET	1	

FIG. 198 REAR INJECTION LINE (2/2)

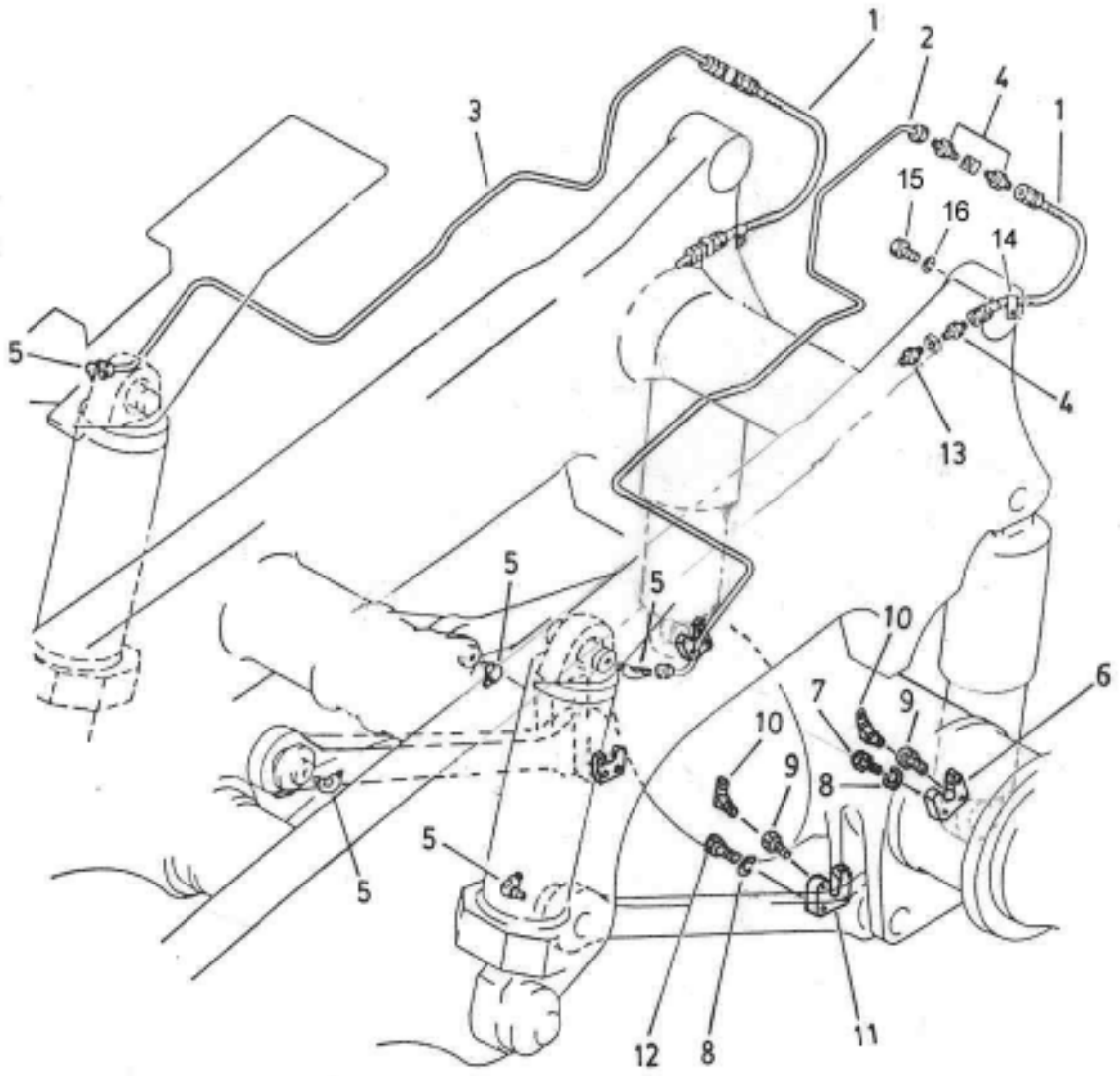

SLNO	PART NUMBER	DESCRIPTION	QTY	REMARKS
01	985-AL-02102	HOSE	2	
02	985-AL-02119	TUBE	1	
03	985-AL-02127	TUBE	1	
04	985-AL-11231	NIPPLE	6	
05	985-AL-11337	ELBOW	2	
06	985-AL-11345	PLATE	2	
07	CFB01-21245	BOLT	4	
08	CFW01-11236	WASHER	8	
09	985-AL-11256	BUSHING	12	
10	990-AL-11380	CONNECTOR, ELBOW	12	
11	985-AL-11401	PLATE	2	
12	CFB01-21265	BOLT	2	
13	985-AL-11175	CONNECTOR	4	
14	CCC06-11214	CLIP	2	
15	CFS01-21016	SCREW	2	
16	CFW01-11236	SPRING WASHER	2	
17	985-ZZ-16256	INJECTOR COVER,REAR	1	

FIG. 199 REAR HOSE ASSY ROUTING

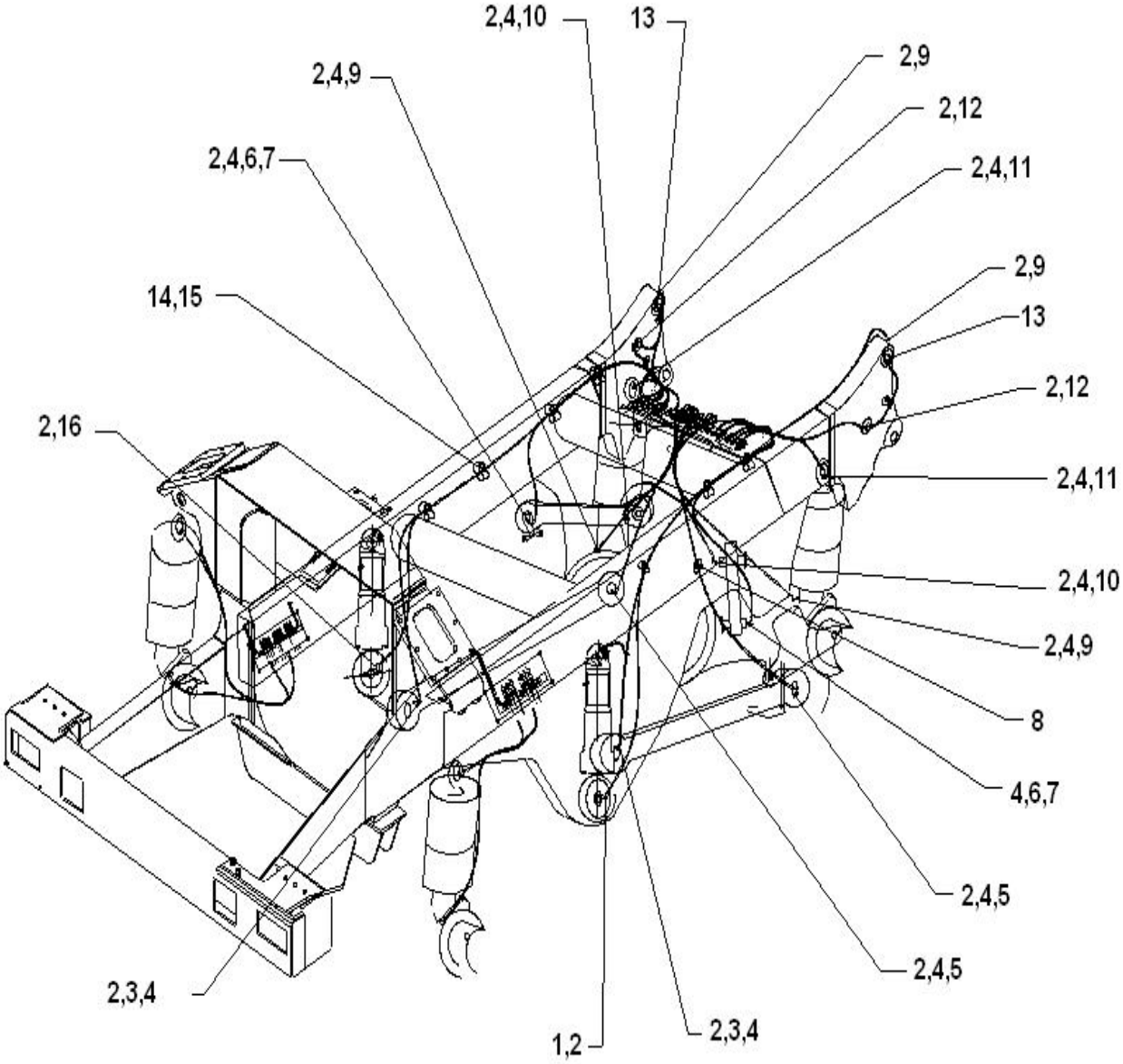

SLNO	PART NUMBER	DESCRIPTION	QTY	REMARKS
01	953-AL-01386	HOSE ASSY.	1	
02	990-AL-11092	MALE ELBOW CONNECTOR	17	
03	953-AL-01215	HOSE ASSY.	2	
04	985-AL-11256	ADAPTOR	12	
05	953-AL-01118	HOSE ASSY.	2	
06	953-AL-01061	HOSE ASSY.	2	
07	985-AL-11329	EXT. ADAPTOR	2	
08	CCC06-11014	CLIP	10	
09	953-AL-01126	HOSE ASSY.	4	
10	953-AL-01134	HOSE ASSY.	2	
11	953-AL-01191	HOSE ASSY.	2	
12	953-AL-01175	HOSE ASSY.	2	
13	985-AL-11337	ELB. ADAPTOR	2	
14	CCC06-01814	CLIP	10	
15	CFS01-21016	HEX.SCREW	20	
16	953-AL-01378	HOSE ASSY.	1	

FIG. 200 HOSE ASSY ROUTING

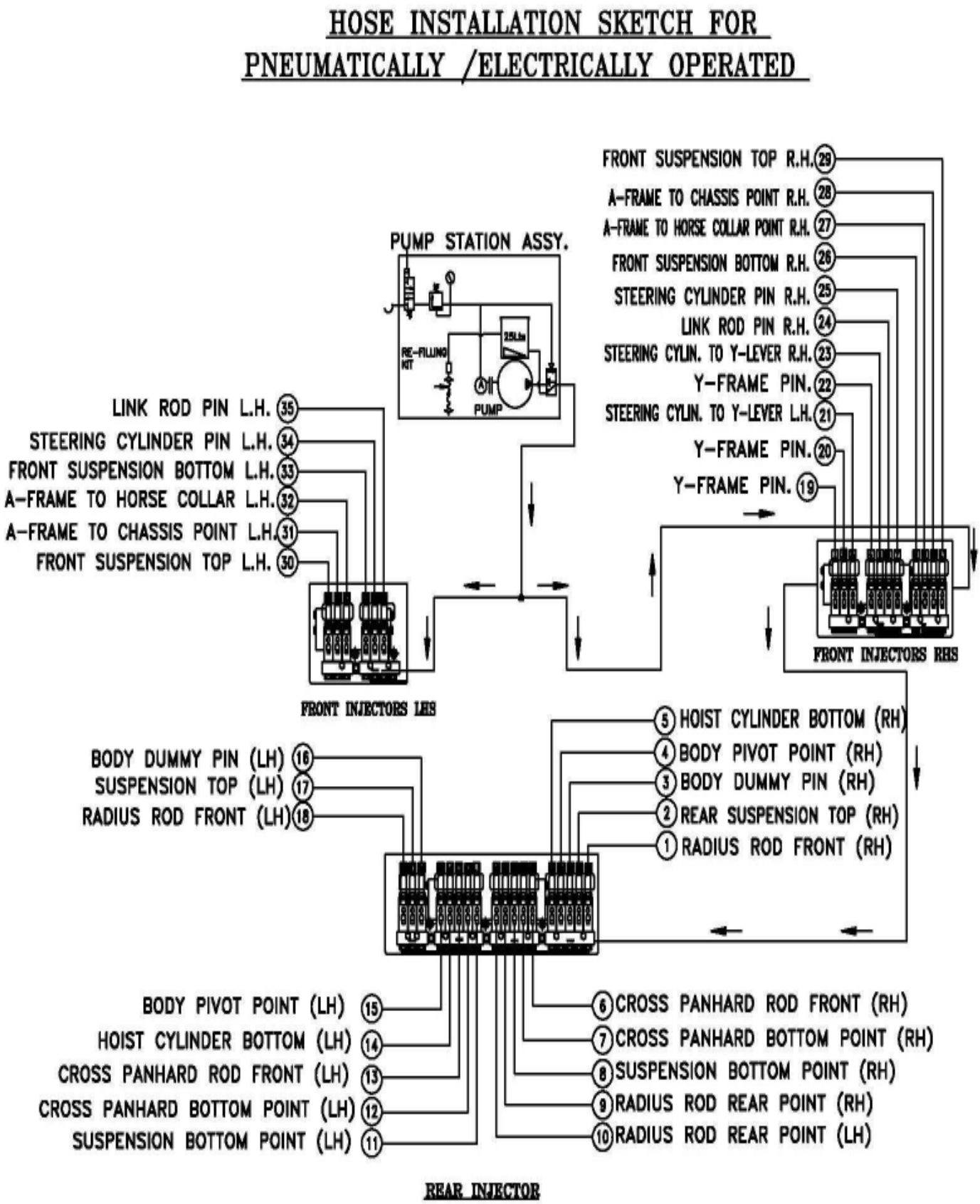

SLNO	PART NUMBER	DESCRIPTION	QTY	REMARKS
01	953-AL-01215	HOSE ASSY.	1	
02	953-AL-01191	HOSE ASSY.	1	
03	953-AL-01175	HOSE ASSY.	1	
04	953-AL-01126	HOSE ASSY.	1	
05	953-AL-01378	HOSE ASSY.	1	
06	953-AL-01061	HOSE ASSY.	1	
07	953-AL-01134	HOSE ASSY.	1	
08	953-AL-01126	HOSE ASSY.	1	
09	953-AL-01118	HOSE ASSY.	1	
10	953-AL-01118	HOSE ASSY.	1	
11	953-AL-01126	HOSE ASSY.	1	
12	953-AL-01134	HOSE ASSY.	1	
13	953-AL-01061	HOSE ASSY.	1	
14	953-AL-01386	HOSE ASSY.	1	
15	953-AL-01126	HOSE ASSY.	1	
16	953-AL-01175	HOSE ASSY.	1	
17	953-AL-01191	HOSE ASSY.	1	
18	953-AL-01215	HOSE ASSY.	1	
19	953-AL-01159	HOSE ASSY.	1	
20	953-AL-01094	HOSE ASSY.	1	
21	953-AL-01183	HOSE ASSY.	1	
22	953-AL-01142	HOSE ASSY.	1	
23	953-AL-01118	HOSE ASSY.	1	
24	953-AL-01086	HOSE ASSY.	1	
25	953-AL-01142	HOSE ASSY.	1	
26	953-AL-01134	HOSE ASSY.	1	
27	953-AL-01134	HOSE ASSY.	1	
28	953-AL-01134	HOSE ASSY.	1	
29	953-AL-01126	HOSE ASSY.	1	
30	953-AL-01191	HOSE ASSY.	1	
31	953-AL-01061	HOSE ASSY.	1	
32	953-AL-01167	HOSE ASSY.	1	
33	953-AL-01394	HOSE ASSY.	1	
34	953-AL-01094	HOSE ASSY.	1	
35	953-AL-01086	HOSE ASSY.	1	

FIG. 201 INJECTOR

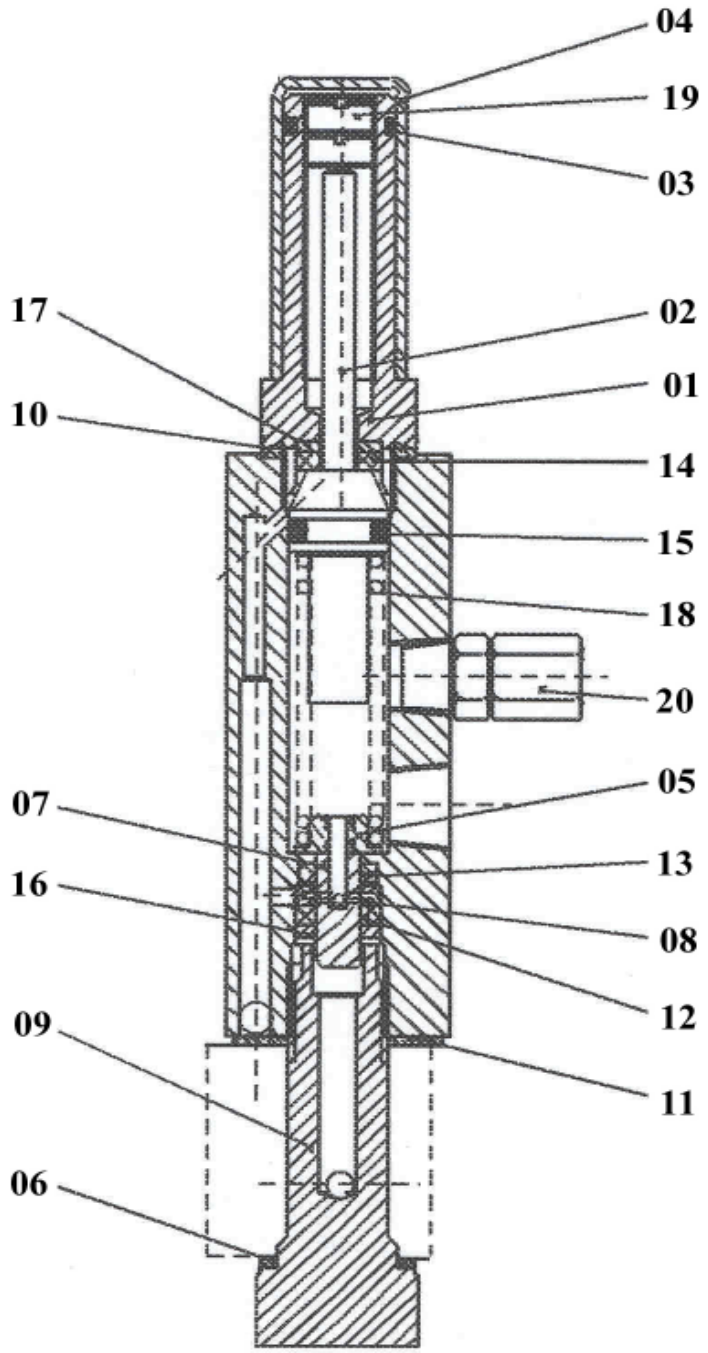

SLNO	PART NUMBER		DESCRIPTION	QTY	REMARKS
	985-AL-03261		INJECTOR		
01	985-AL-12358	*	ADJUSTING SLEEVE	1	
02	985-AL-12366	*	PISTON ROD	1	
03	985-AL-62376	*	O-RING	1	
04	985-AL-12382	*	PROTECTIVE CAP	1	
05	985-AL-12399	*	SPRING SEAT	1	
06	985-AL-12406	*	WASHER	1	
07	985-AL-12414	*	WASHER	1	
08	985-AL-12422	*	INLET DISC	1	
09	985-AL-12439	*	ADAPTER BOLT	1	
10	985-AL-12447	*	GASKET	1	
11	985-AL-12455	*	ADAPTER GASKET	1	
12	985-AL-72469	*	PACKING	1	
13	985-AL-72477	*	PACKING	1	
14	985-AL-72485	*	PACKING	1	
15	985-AL-62498	*	O-RING	1	
16	985-AL-12503	*	WASHER	1	
17	985-AL-12511	*	WASHER	1	
18	985-AL-12528	*	COMPRESSION SPRING	1	
19	985-AL-12536	*	RING SCREW	1	
20	985-AL-12544	*	FITTING ASSY	1	
	985-SK-01517		SERVICE KIT	1	

FIG. 202 HOSE ASSY ROUTING FROM TANK

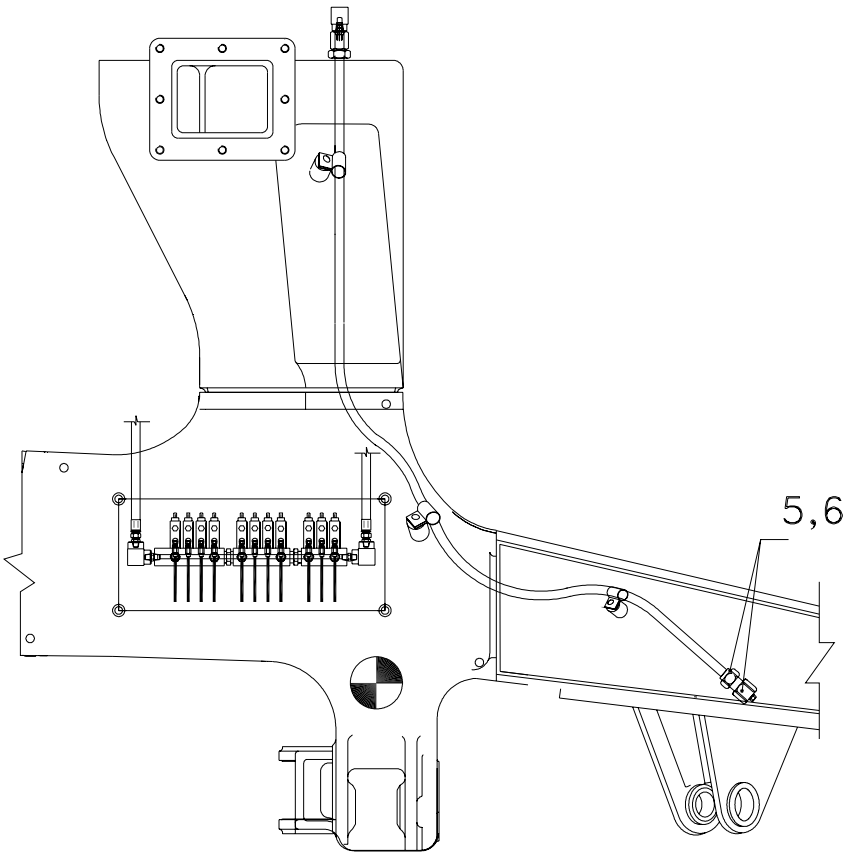

VIEW–S

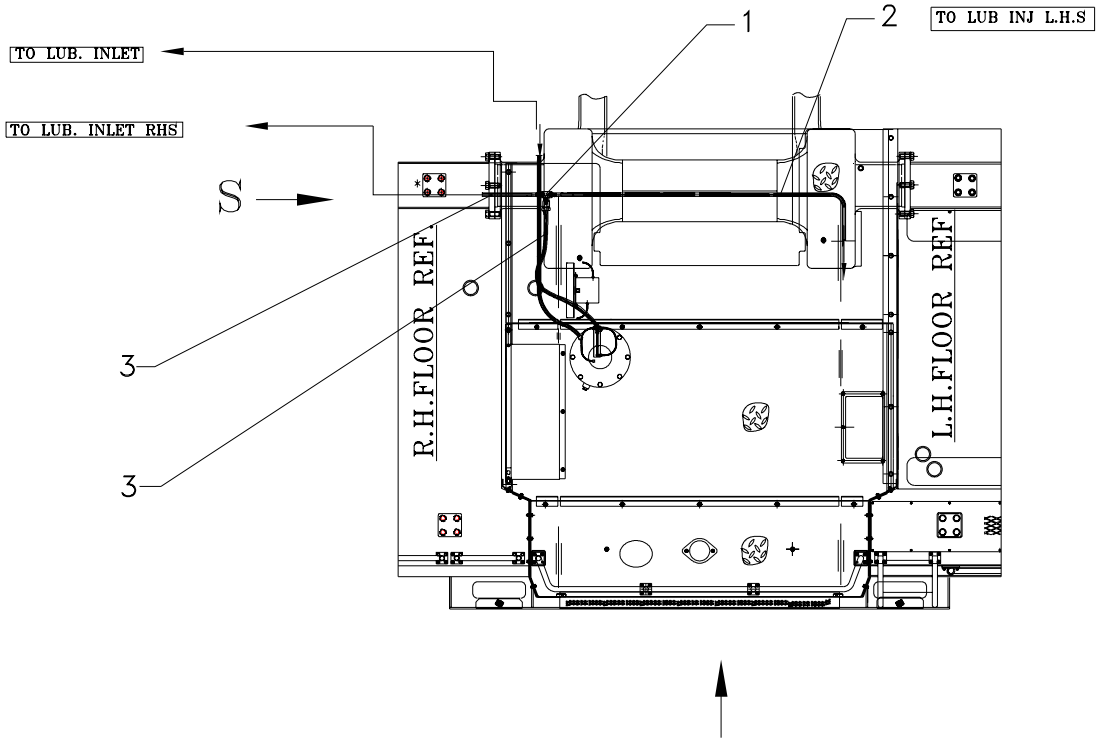

PUMP MOUNTING DETAILS.

HOSE ASSY ROUTING FROM TANK

FIG NO. 202

SLNO	PART NUMBER	DESCRIPTION	QTY	REMARKS
01	985-AL-11191	TEE ADAPTOR	1	
02	953-AL-01361	HOSE ASSY	1	
03	985-AL-02021	HOSE ASSY	2	
04	TF 5069	ELB. ADAPTOR	1	
05	953-AL-11049	QUICK CHANGE COUPLING	1	
06	953-AL-11057	ADAPTOR	1	

FIG. 203 AIR PRESSURE REGULATOR

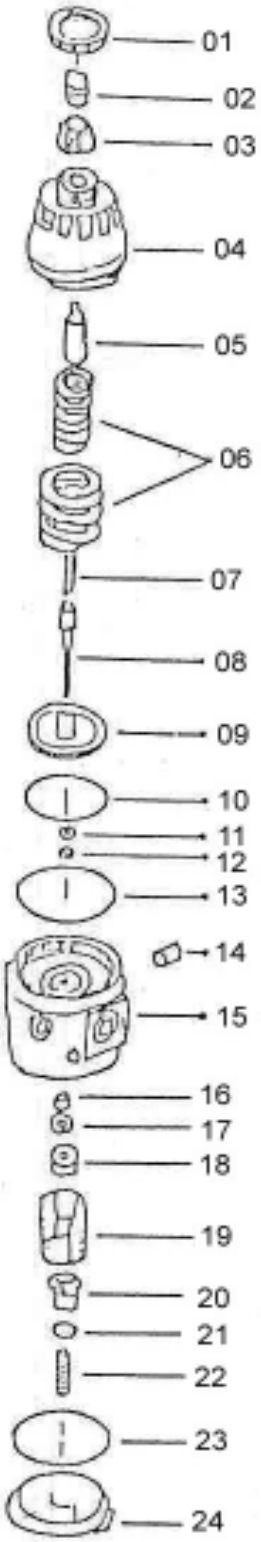

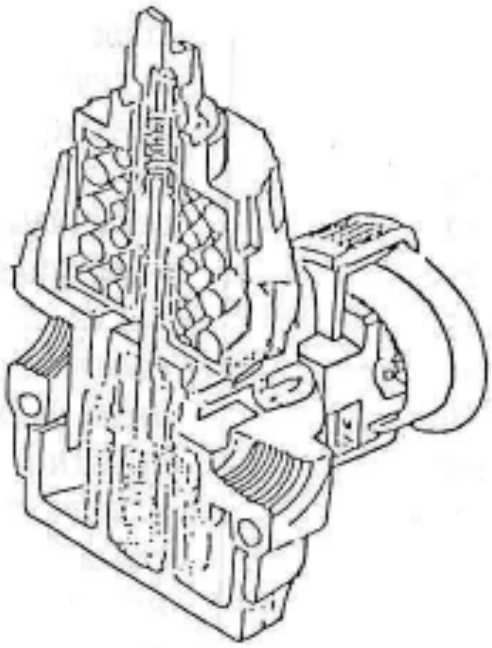

SLNO	PART NUMBER		DESCRIPTION	QTY	REMARKS
	985-AL-02095		AIR PRE REGULATOR		
01	985-AL-71415	*	PANEL MOUNT NUT	1	
02	985-AL-71423	*	KNOB LOCK	1	
03	985-AL-71431	*	ADJ. KNOB	1	
04	985-AL-71442	*	BONNET	1	
05	985-AL-71459	*	COUPLING	1	
06	985-AL-71467	*	SPRING	1	
07	985-AL-71475	*	COUPLING SPRING	1	
08	985-AL-71483	*	SCREW	1	
09	985-AL-03252	*	PISTON ASSY	1	
10	985-AL-61587	*	O RING (KIT)	1	
11	985-AL-11597	*	WASHER (KIT)	1	
12	985-AL-61606	*	V SEAL (KIT)	1	
13	985-AL-61615	*	SEAL (KIT)	1	
14	985-AL-11629	*	PIPE PLUG	1	
15	985-AL-11637	*	BODY	1	
16	985-AL-61647	*	V SEAL (KIT)	1	
17	985-AL-11653	*	RETAINING RING	1	
18	985-AL-11661	*	VALVE SEAT	1	
19	985-AL-11678	*	SCREEN	1	
20	985-AL-11686	*	VALVE (KIT)	1	
21	985-AL-61696	*	O RING	1	
22	985-AL-11701	*	VALVE SPRING	1	
23	985-AL-61716	*	SEAL (KIT)	1	
24	985-AL-11718	*	BOTTOM CAP	1	
	985-SK-01217		SERVICE KIT		

XI
AIR CONDITIONER/ HEATER INSTALLATION & ASSY.

FIG. 206 AIR CONDITION / HEATER INSTALLATION

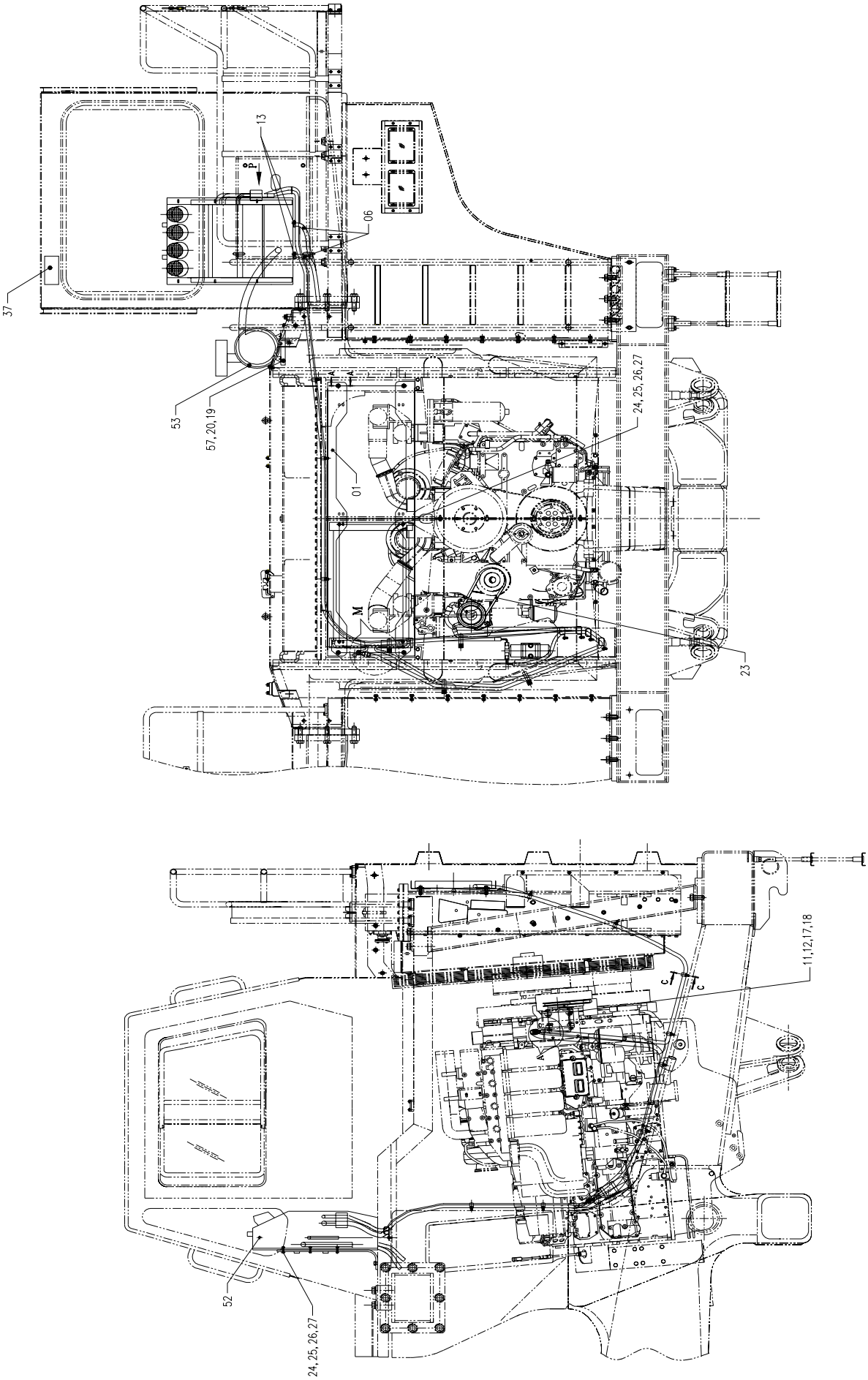

SLNO	PART NUMBER	DESCRIPTION	QTY	REMARKS
01	953-AC-12264	SUPPORT	2	
02	778-AC-02131	CONDENSER	1	
03	953-AC-62258	CUSHION	4	
04	CFB05-21245	HEX. BOLT	4	
05	451-WC-11012	WASHER	8	
06	778-AC-62218	DRAIN HOSE	2	
07	955-AC-02151	COMPRESSOR	1	
08	953-RC-62029	GROMMET	2	
09	953-RC-62012	RUBBER GROMMET	1	
10	CCC10-00519	BAND	10	
11	CFW05-10032	WASHER	4	
12	CFS01-21040	HEX. SCREW	4	
13	CCC01-03008	CLAMP	2	
14	C2501-10622	CABLE RED COLOR(L=6mts.)	1	
15	C2501-10611	CABLE WHITE COLOR(L=13mts.)	1	
16	VC-7673	CLAMP	12	
17	CFN01-11084	HEX. NUT	4	
18	CFW01-11030	SPRING WASHER	16	
19	953-AC-02317	CHANNEL STR.	2	
20	CFW02-11020	WASHER	16	
21	CPW03-10022	TAPPED PAD	12	
22	CFS01-11020	HEX. SCREW	12	
23	953-AC-61204	V-BELT	1	
24	778-AC-12298	HEX. BOLT	10	
25	778-AC-12281	HEX. NUT	10	
26	778-AC-12305	LOCK WASHER	10	
27	778-AC-12313	FLAT WASHER	10	
28	985-AC-71756	TIE WRAP PIN	12	
29	955-AC-81743	TERMINAL FEMALE 1/4” INSU	2	
30	955-AC-11953	RECEIVER DRIER	1	
31	955-AC-11848	WASHER FLAT M6	2	
32	955-AC-61858	#6 STR. FITTING	1	
33	953-AC-11349	RECEIVER DRIER BRACKET	1	
34	955-AC-81573	BINARY PRESSURE SWITCH	1	
35	955-AC-11823	SCREW M6x1.0	2	

FIG. 206 AIR CONDITION / HEATER INSTALLATION

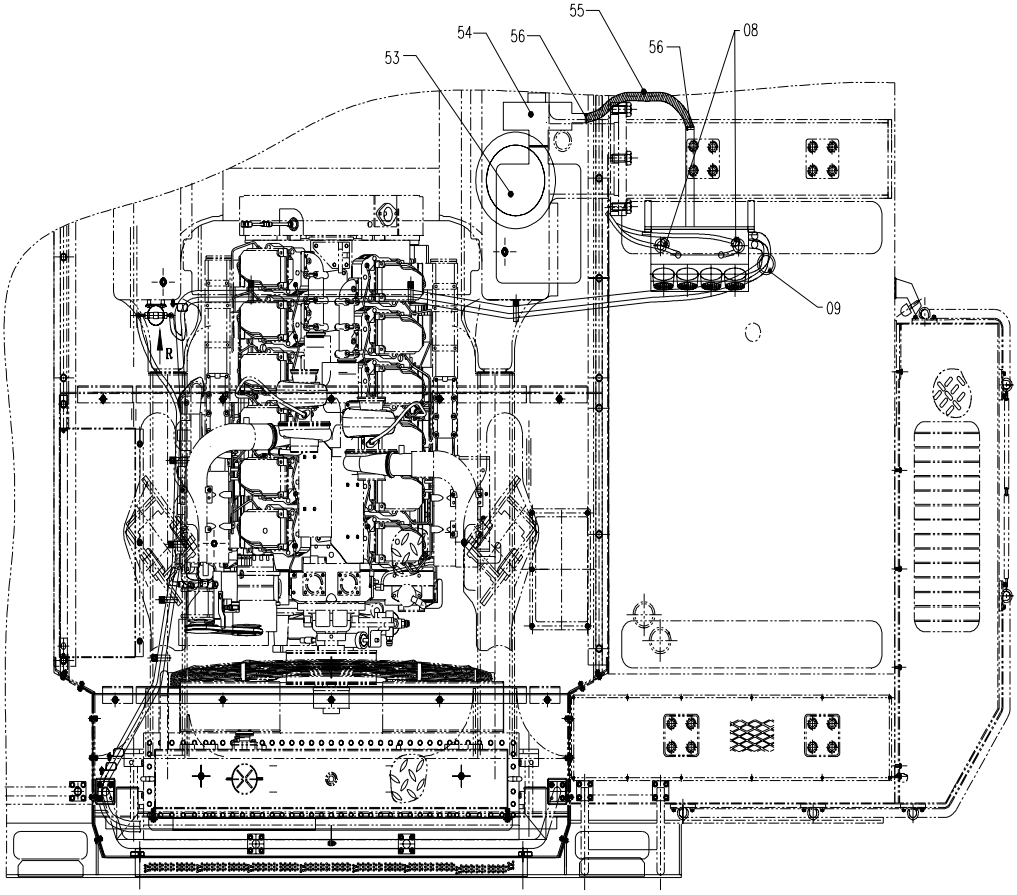

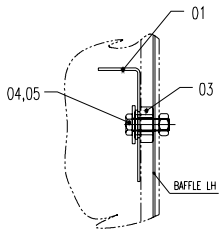

SECTION-AA

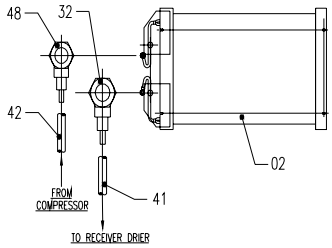

DETAIL-M

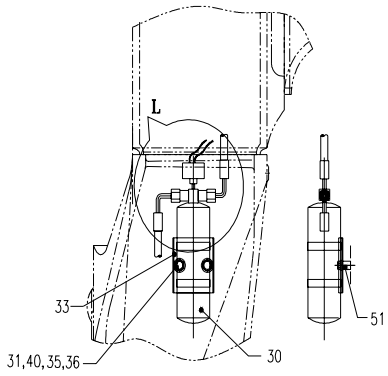

VIEW-R

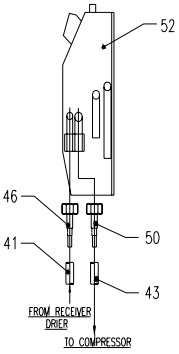

VIEW-P

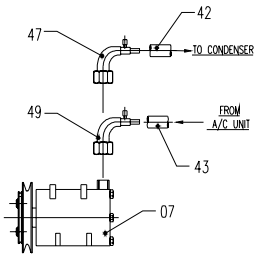

DETAIL-A

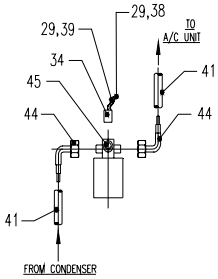

DETAIL-L

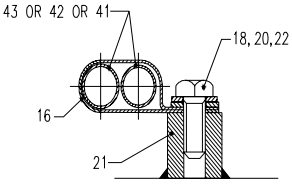

SECTION CC

SLNO	PART NUMBER	DESCRIPTION	QTY	REMARKS
36	955-AC-11831	NUT M6x1.0	2	
37	955-AC-11961	LABEL R134A DISCLAIMER	1	
38	955-AC-11807	WIRE 14 GA G.X.L.	1	
39	955-AC-11791	WIRE 16 GA G.X.L.	1	
40	955-AC-11945	LOCK WASHER M6	2	
41	778-AC-62226	FREON HOSE #6	1	
42	778-AC-62234	FREON HOSE #8	1	
43	778-AC-61817	FREON HOSE #10	1	
44	955-AC-61639	#6, 90DEG. FITTING	2	
45	955-AC-81979	RELAY 24V	1	
46	955-AC-61874	#6, STR. FITTING	1	
47	955-AC-61866	#8, 90DEG. FITTING	1	
48	955-AC-61647	#8, STR. FITTING	1	
49	955-AC-61939	#10, 90DEG. FITTING	1	
50	955-AC-61922	#10, STR. FITTING	1	
51	CPW01-06012	ROUND BOSS	2	
52	778-AC-02148	A.C.UNIT	1	
53	953-AC-02285	HOR. MOUNT FILTER	1	
54	953-AC-02293	PRESSURISER	1	
55	953-AC-72286	HOSE	1	
56	953-AC-02309	CLAMP	2	
57	CFB01-11025	HEX. BOLT	4	
	955-AC-02321	A.C. INST. KIT	1	

XII
DECAL INSTALLATION & TOOLS

FIG. 207 DECAL INSTALLATION (1/2)

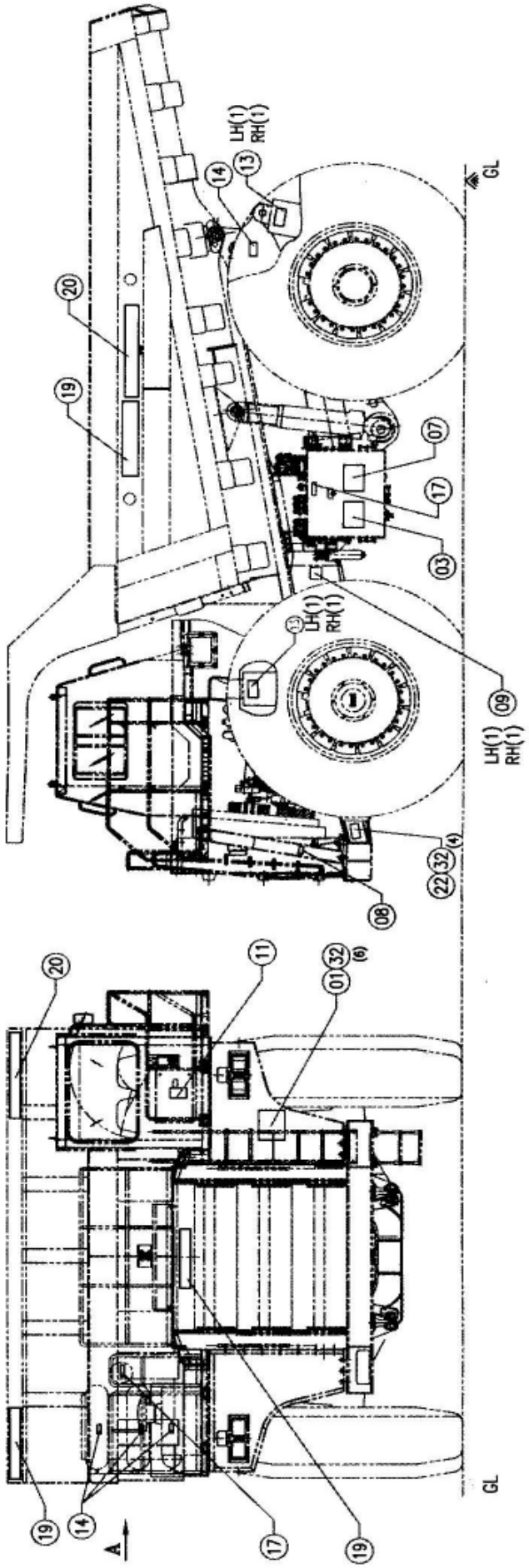

SLNO	PART NUMBER	DESCRIPTION	QTY	REMARKS
	953-DZ-00019	DECAL INSTALLATION		
01	953-DZ-21403	LUBRICATION CHART	1	
02	953-DZ-71121	BATTERY BOX DECAL	1	
03	953-DZ-71138	HYD. TANK DECAL	1	
04	953-DZ-71146	RADIATOR DECAL	1	
05	953-DZ-71154	UEC SYMBOLS DECAL	1	
06	953-DZ-71162	DIESEL TANK DECAL	1	
07	953-DZ-71179	BODY MAINTENANCE DECAL	1	
08	953-DZ-71187	TYRE PR. & FAN COVER DECAL	1	
09	953-DZ-71219	WHEEL SPACER DECAL	4	
10	953-DZ-71227	SUSPENSION CYL. MARKING	4	
11	953-DZ-71235	CKT. BREAKER DECAL	1	
12	953-DZ-71243	ENGINE OIL FILTER DECAL	1	
13	953-DZ-71251	SUSPENSION CYL. SAFETY	4	
14	953-DZ-71268	AIR TANK DECAL	4	
15	953-DZ-71276	STARTER SWITCH DECAL	1	
16	953-DZ-71284	RETARDER CONTROL DECAL	1	
17	953-DZ-71292	HYD. OIL DECAL	2	
18	953-DZ-71365	TRANSPARENT DECAL	1	
19	953-DZ-71373	BEML LOGO	4	
20	953-DZ-71381	EQPT. LOGO	3	
21	953-DZ-71316	AIR CLEANER INSTRUCTIONS	1	
22	935-DZ-20157	NAME PLATE	1	
23	951-DZ-21042	CAUTION RADIATOR CAP	1	
24	953-EG-11772	PLATE	REF	
25	953-RC-17074	PLATE	REF	
26	955-EG-22111	SWITCH MOUNT PLATE	1	
27	985-DZ-21335	NAME PLATE DUMP BRAKE	1	
28	985-DZ-21343	NAME PLATE FRONT BRAKE	1	
29	985-DZ-21351	NAME PLATE EMERG. BRAKE	1	
30	985-FP-21158	DECAL (GROUND LEVEL)	1	
31	985-FP-21166	FPS DECAL	1	
32	R 1073-3	DRIVE SCREW	14	
	953-DZB-0148	DECAL KIT		
	953-DZB-0164	DECAL KIT		

FIG. 207 DECAL INSTALLATION (2/2)

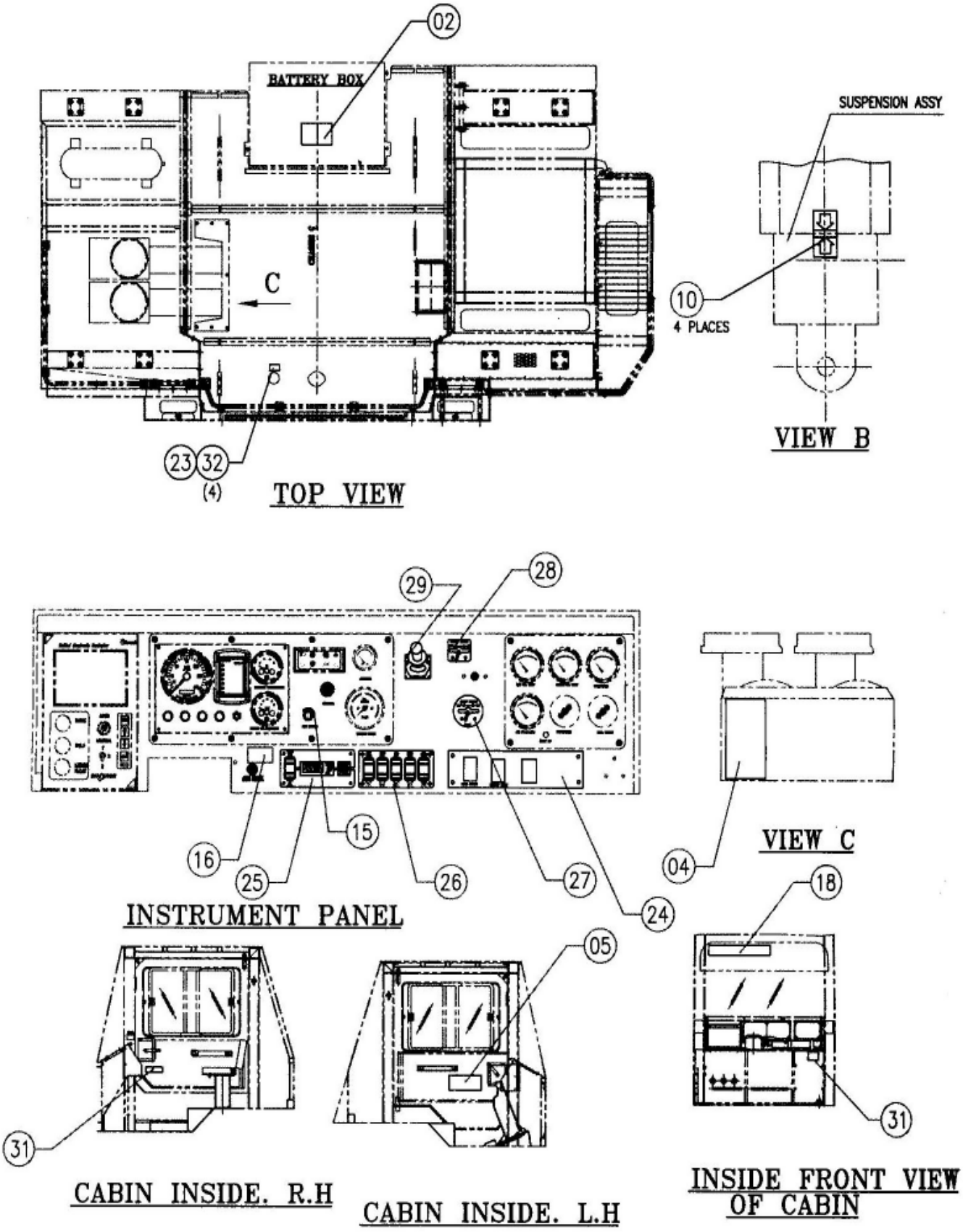

FIG. 208 RETRO REFLECTOR

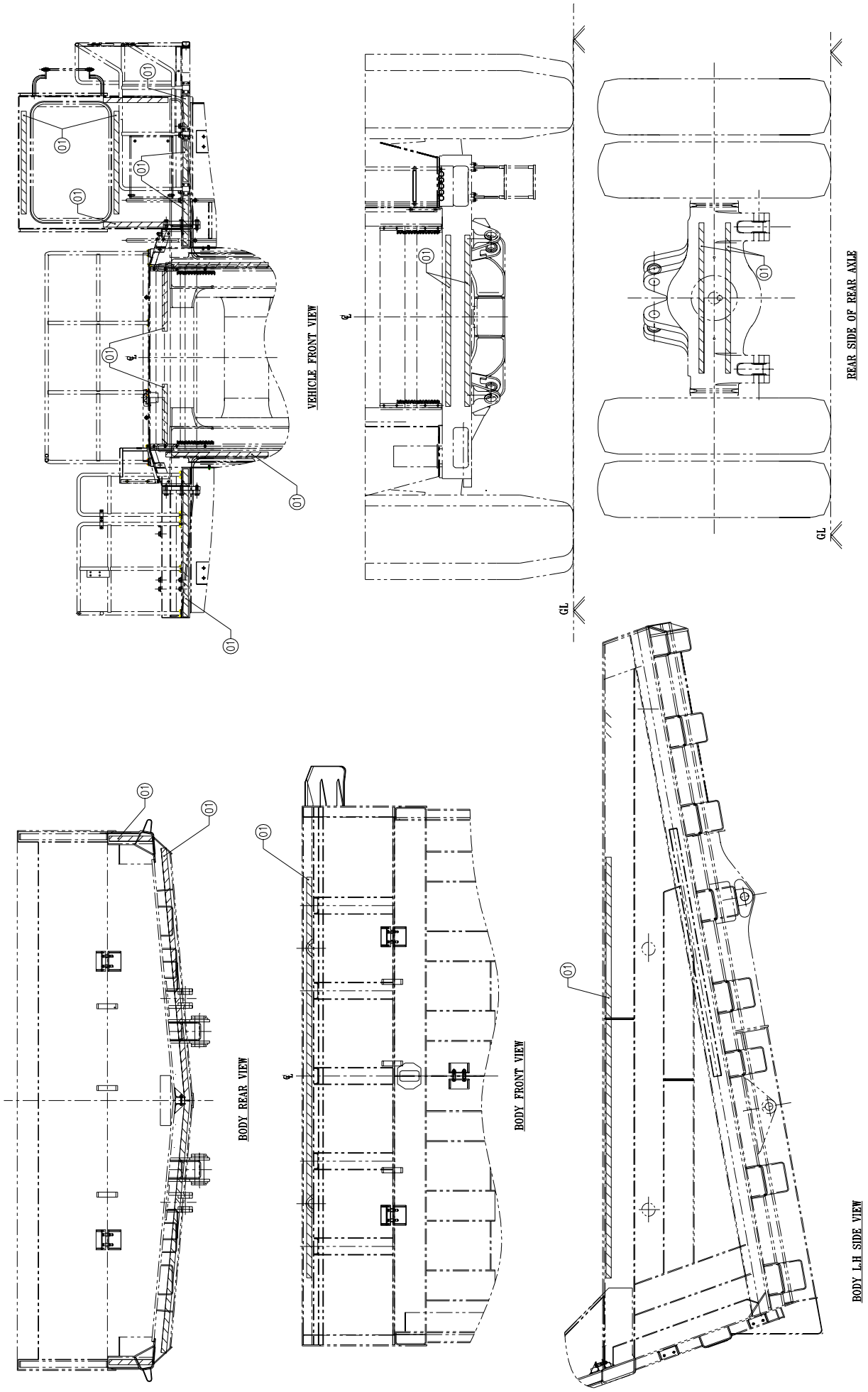

SLNO	PART NUMBER	DESCRIPTION	QTY	REMARKS
	953-DZ-01023	RETRO REFLECTOR	1	
01	451-DZB-0023	RED REFLECTIVE STICKER	1	

FIG. 209 TOOLS

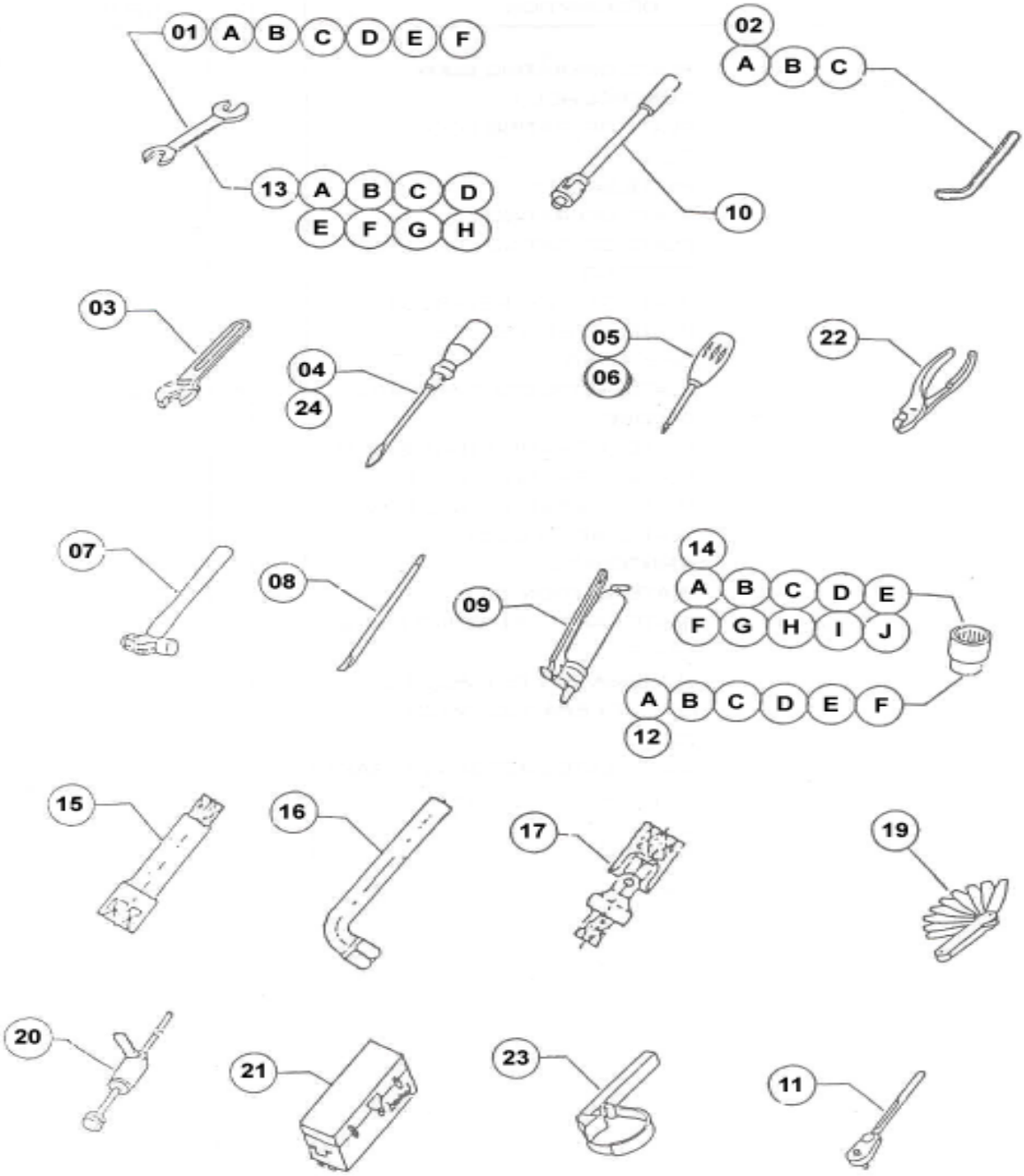

SLNO	PART NUMBER	DESCRIPTION	QTY	REMARKS
01	985-TI-02048	DOUBLE ENDED OPEN JAW		
01a	451-TI-11048	8x10 mm	1	
01b	451-TI-11056	12x14 mm	1	
01c	451-TI-11064	13x17 mm	1	
01d	451-TI-11072	19x22 mm	1	
01e	451-TI-11081	24x27 mm	1	
01f	451-TI-11097	30x32 mm	1	
02	985-TI-02064	ALEN WRENCH SET	1	
02a	985-TI-11274	5 mm	1	
02b	985-TI-11282	6 mm	1	
02c	985-TI-11299	8 mm	1	
03	985-TI-11306	WRENCH ADJUSTABLE 250 mm		
04	451-TI-11023	ENGG. PATREN SCREW DRIVE		
05	985-TI-11314	PHILIPS SCREW DRIVER	1	
06	985-TI-11322	PHILIPS SCREW DRIVE R8x150	1	
07	451-TI-11242	BALL PIN HAMMER	1	
08	985-TI-11128	BAR	1	
09	985-TI-11111	GREASE GUN WITH		
10	451-TI-11283	SWIVEL HANDLE 1/2"SQ.DRIVE		
11	451-TI-11234	NON REVERSIBLE RATCHET	1	
12	985-TI-02072	BIHEXOGONAL SOCKET		
12a	985-TI-11339	3/8" SOCKET	1	
12b	985-TI-11347	7/16" SOCKET	1	
12c	985-TI-11741	1/2" SOCKET	1	
12d	985-TI-11363	9/16" SOCKET	1	
12e	985-TI-11371	5/8" SOCKET	1	
12f	985-TI-11388	13/16" SOCKET	1	
13	985-TI-02056	DOUBLE ENDED OPEN		
13a	985-TI-11193	3/8" x 7/16"	1	
13b	985-TI-11209	1/2" x 9/16"	1	
13c	985-TI-11217	11/16" x 19/32"	1	
13d	985-TI-11225	7/8" x 13/16"	1	
13e	985-TI-11233	15/16" x 1"	1	
13f	985-TI-11241	11/16" x 11/4"	1	
13g	985-TI-11258	11/8" x 1"	1	
13h	985-TI-11266	5/8" x 3/4"	1	
14	451-TI-02016	BIHEX SOCKET 1/2" SQ.DRIVE	1	
14a	451-TI-11129	10mm	1	

FIG. 209 TOOLS

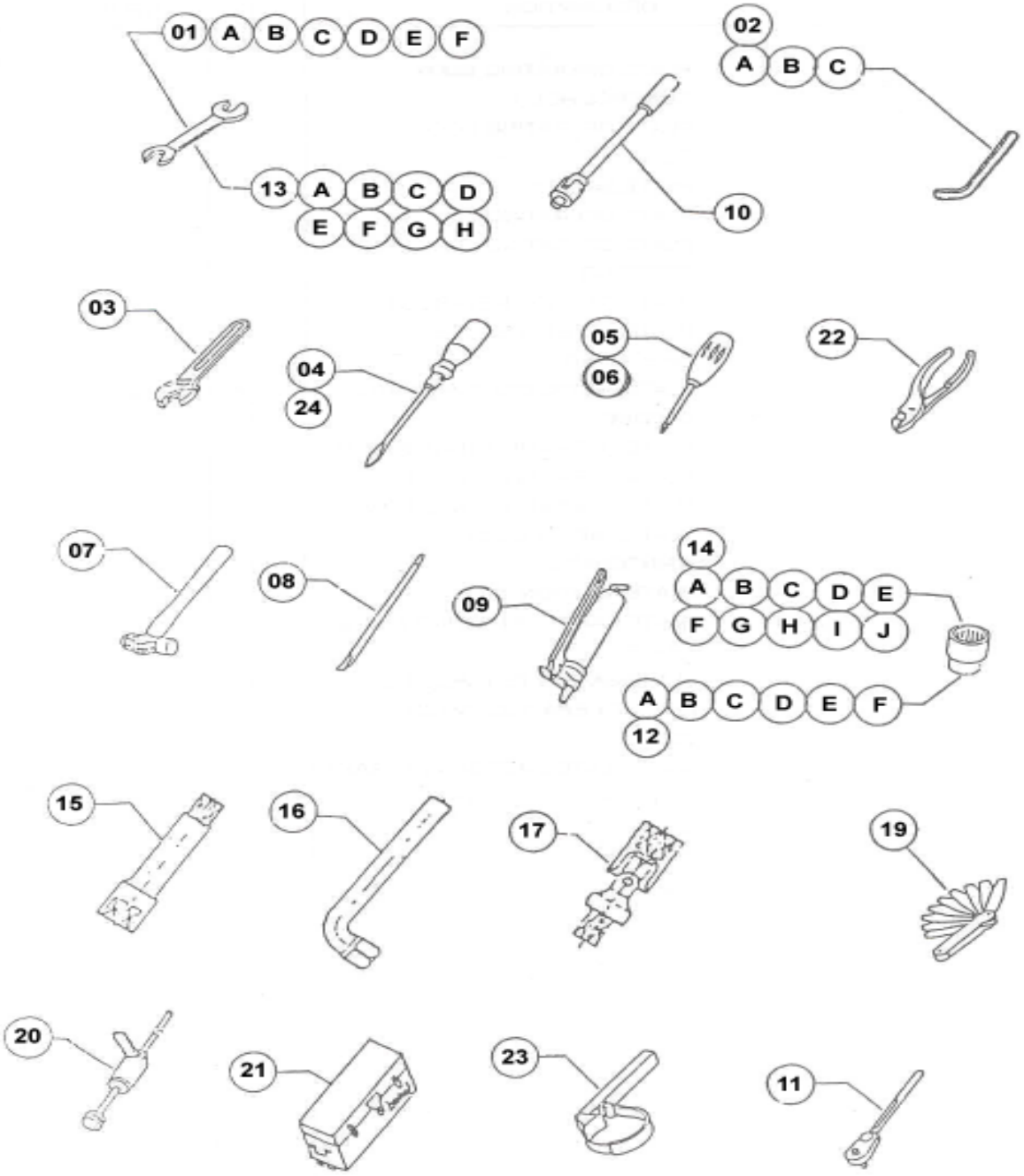

SLNO	PART NUMBER	DESCRIPTION	QTY	REMARKS
14b	451-TI-11137	13mm	1	
14c	451-TI-11145	14mm	1	
14d	451-TI-11153	17mm	1	
14e	451-TI-11161	19mm	1	
14f	451-TI-11178	22mm	1	
14g	451-TI-11186	24mm	1	
14h	451-TI-11194	27mm	1	
14i	451-TI-11202	30mm	1	
14j	451-TI-11218	32mm	1	
15	451-TI-11275	EXTENSION BAR 1/2" SQ.	1	
16	985-TI-11396	“L” HANDLE 1/2" SQ.DRIVE	1	
17	451-TI-11259	UNIVERSAL JOINT 1/2" SQ.	1	
18	935-TI-02191	TYRE INFLATION KIT	1	OPT.
18a	935-TI-03009	TYRE INFLATOR	1	OPT.
18b	985-TI-11444	ADAPTOR	1	OPT.
19	985-TI-11103	THICKNESS GAUGE	1	
20	985-TI-02031	DISC GAUGE	1	
21	985-TI-01002	TOOL BOX	1	
22	451-TI-11226	SLIP JOINT PLIER	1	
23	09019-08035	WRENCH FILTER	1	OPT.
24	935-TI-11774	HEX.SCREW DRIVER	1	
25	561816000001	SUSPENSION CHARGING KIT	1	OPT.
25a	561816010000	HIGH PRESSURE REGULATOR	1	OPT.
25b	561816010100	PRESSURE GAUGE 0-210Kgcm	1	OPT.
25c	561816010200	PRESSURE GAUGE 0-140Kgcm	1	OPT.
25d	561816000100	ADAPTOR 1/4” NPTM x 1/4”BSPF	1	OPT.
25e	561816000200	STOP VALVE 1/4”NPT x 1/4”BSP	1	OPT.
25f	561816000300	PURGE VALVE 1/4”NPT x 1/4”BSP	1	OPT.
25g	561816000400	DISTRIBUTION ADAPTOR	1	OPT.
25h	561816000500	PRESSURE GAUGE 0-70Kgcm	2	OPT.
25i	561816000600	HIGH PRE. Y-PIECE ASSY	1	OPT.
25j	561816000700	HOSE ASSY	2	OPT.
25k	561816000800	ISOLATION VALVE		OPT.
25l	561816000900	VALVE CONNECTOR	4	OPT.
NS	561816001100	FUNNEL	1	OPT.

FIG. 209 TOOLS

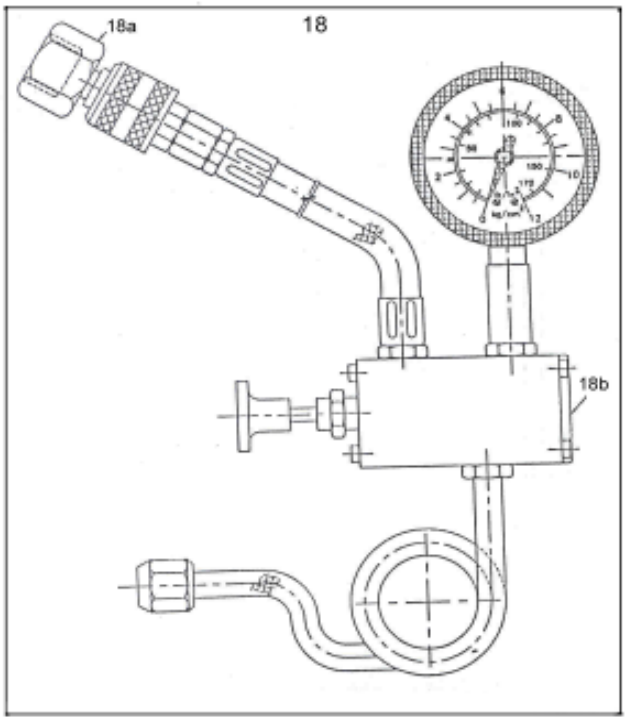

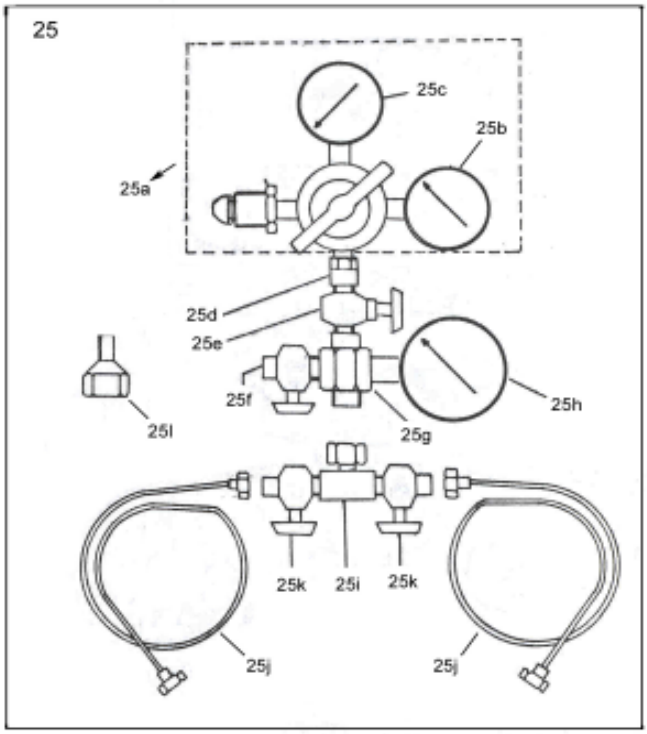

26

SLNO	PART NUMBER	DESCRIPTION	QTY	REMARKS
NS	561816001200	MEASURING TAPE 2MTRS	1	OPT.
NS	561816001300	PTFE TAPE 1/2” W x 10MTRS	1	OPT.
NS	561816020000	TOOL POUCH	1	OPT.
26	953-TI-02043	INSTL. TOOL KIT (WIGGINS SYS.)	1	

XIII
KIT

SLNO	PART NUMBER	DESCRIPTION	QTY	REMARKS
K-1	953-SU-00016	REAR SUSPENSION SERVICE KIT		
K-2	953-ZZ-00026	TRANSMISSION CV SEAT SEAL KIT		
K-3	953-ZZ-00042	LOCKUP VALVE SEAL KIT		
K-4	953-ZZ-00059	TC VALVE SEAL KIT		
K-5	953-ZZ-00067	REGULATOR VALVE SEAL KIT		
K-6	953-ZZ-00075	TRANS. CONTROL VALVE SEAL KIT		
K-7	953-ZZ-00083	LUB VALVE SEAL KIT		
K-8	953-ZZ-00091	SOLENOID VALVE SERVICE KIT		
K-9	953-ZZ-00107	TORQUE CONVERTOR COMPLETE SERVICE KIT		
K-10	953-ZZ-00115	TRANSMISSION COMPLETE SERVICE KIT		
K-11	953-ZZ-00123	TRANSMISSION SEAL KIT		
K-12	953-ZZ-00131	TORQUE CONVERTOR SEAL KIT		
K-13	953-HC-00029	STEERING CYLINDER ASSY SEAL KIT		
K-14	953-HC-00012	HOIST CYLINDER SEAL KIT		
K-15	985-SK-01444	SEAL KIT (HOIST VALVE)		
K-16	953-SK-00046	REPAIR KIT (RETURN LINE FILTER ASSY)		
K-17	766-SK-00061	SEAL KIT (RELIEF VALVE)		
K-18	953-OC-01054	TRANSMISSION FILTRATION IMPROVEMENT KIT		
K-19	985-AX-03018	SEAL KIT FRONT BRAKE		
K-20	985-SK-01582	BRAKE CHAMBER ASSY REAR REPAIR KIT		
K-21	985-SK-01574	BRAKE CHAMBER ASSY FRONT REPAIR KIT		
K-22	985-SK-01436	SLACK ADJUSTER ASSY SERVICE KIT		
K-23	950-SK-00205	SHUT OFF COCK SERVICE KIT		
K-24	950-SK-00198	LEVER TYPE CONTROL VALVE SERVICE KIT		
K-25	950-SK-00181	DUAL BRAKE VALVE SERVICE KIT		
K-26	950-SK-00149	RELAY EMERGENCY VALVE SERVICE KIT		
K-27	950-SK-00254	D2 GOVERNER VALVE REPAIR KIT		

SLNO	PART NUMBER	DESCRIPTION	QTY	REMARKS
K-28	950-SK-00108	LIMITING AND QUICK RELEASE VALVE SERVICE KIT		
K-29	950-SK-00068	GRADUATED HAND CONTROL VALVE SERVICE KIT		
K-30	950-SK-00051	INVERSION VALVE SERVICE KIT		
K-31	566-35-05014	RETARDER VALVE SERVICE KIT		
K-32	985-SK-01047	PARKING BRAKE SERVICE KIT		
K-33	985-SK-01014	AIR PIPING SERVICE KIT (1/4")		
K-34	985-SK-01022	AIR PIPING SERVICE KIT (3/8")		
K-35	985-SK-01039	AIR PIPING SERVICE KIT (5/8")		
K-36	985-SK-01517	INJECTOR SERVICE KIT (AUTO GRE)		
K-37	985-SK-01217	AIR PRESSURE REGULATOR SERVICE KIT		
K-38	985-SK-01485	GAKET & O-RING KIT		
K-39	985-ZZ-14888	HOSE KIT (REAR BRAKE)		
K-40	985-SK-01428	SERVICE KI (AIR CYLINDER)		
K-41	985-TI-02089	A.C. CHARGING KIT (RED DOT MAKE)		
K-42	985-AX-00507	DIFFERENTIAL SERVICE KIT		
K-43	985-AX-00515	FINAL DRIVE SERVICE KIT		
K-44	985-AX-03001	FRONT BRAKE OVERHAUL KIT		
K-45	985-SK-01639	DAMPER SERVICE KIT		
K-46	953-HSB-0047	O-RING KIT (HYD. TANK INST.)		
K-47	953-HSB-0063	O-RING KIT (EMERGENCY STEERING INST.)		
K-48	953-HSB-0071	HOSE ASSY KIT (EMERGENCY STEERING INST)		
K-49	953-OCB-0024	O-RING KIT (TRANS. OIL COOLER & PIPING INST)		
K-50	953-OCB-0032	HOSE KIT (TRANS. OIL COOLER & PIPING INST)		
K-51	950-SK-00035	QUICK RELEASE VALVE SEAL KIT		
K-52	953-HSB-0241	O-RING KIT (HYD. TANK ASSY. SPLIT TYPE)		
K-53	953-HSB-0258	O-RING KIT (BRAKE OIL PIPING)		
K-54	953-HSB-0266	HOSE ASSY KIT (BRAKE OIL PIPING)		

SLNO	PART NUMBER	DESCRIPTION	QTY	REMARKS
K-55	953-HSB-0282	O-RING KIT (HOIST PIPING INST)		
K-56	953-HSB-0299	HOSE ASSY KIT (HOIST PIPING INST)		
K-57	953-HSB-0388	HOSE ASSY KIT (STEERING PIPING INST)		
K-58	953-HSB-0452	O-RING KIT (STEERING PIPING INST)		
K-59	953-OCB-0073	HOSE ASSY KIT (TRANS. OIL COOLER & PIPING INST)		
K-60	953-OCB-0081	O-RING KIT (TRANS. OIL COOLER & PIPING INST)		
K-61	953-OCB-0049	FILTER ASSY KIT (PALL FILTER)		

SLNO	PART NUMBER		DESCRIPTION	QTY	REMARKS
K-1	953-SU-00016		FRONT AND REAR SUSPENSION SERVICE KIT		
K-1	564300004640	*	O-RING	1	
K-1	VD 5076	*	GASKET PLATE	1	
K-1	953-SU-91191	*	BACK UP RING	2	
K-1	953-SU-91118	*	O-RING	2	
K-1	953-SU-91207	*	BUFFER SEAL	1	
K-1	953-SU-91159	*	SEAL ROD	1	
K-1	953-SU-91167	*	WIPER SEAL	1	
K-2	953-ZZ-00156		TRANSMISSION CV SEAT SEAL KIT		
K-2	07000-73045	*	O-RING	7	
K-2	07000-73035	*	O-RING	3	
K-2	07000-73028	*	O-RING	19	
K-2	07000-72018	*	O-RING	5	
K-3	953-ZZ-00164		LOCKUP VALVE SEAL KIT		
K-3	07000-71006	*	O-RING	3	
K-3	07000-72010	*	O-RING	2	
K-3	07000-72016	*	O-RING	5	
K-3	07000-73038	*	O-RING	2	
K-4	953-ZZ-00148		TC VALVE SEAL KIT		
K-4	07000-72014	*	O-RING	6	
K-4	07000-72020	*	O-RING	1	
K-4	07000-73022	*	O-RING	1	
K-4	07000-73028	*	O-RING	3	
K-4	07000-73035	*	O-RING	1	
K-4	07000-73040	*	O-RING	2	
K-4	07000-73030	*	O-RING	2	
K-4	07000-73038	*	O-RING	1	
K-4	07002-22434	*	O-RING	3	
K-4	07002-23534	*	O-RING	3	
K-5	953-ZZ-00067		REGULATOR VALVE SEAL KIT		
K-5	07000-73035	*	O-RING	1	

SLNO	PART NUMBER		DESCRIPTION	QTY	REMARKS
K-5	07000-72018	*	O-RING	2	
K-5	07000-73042	*	O-RING	1	
K-5	07002-24234	*	O-RING	1	
K-6	953-ZZ-00075		TRANS. CONTROL VALVE SEAL KIT		
K-6	07000-71009	*	O-RING	1	
K-6	07000-72012	*	O-RING	4	
K-6	07000-72015	*	O-RING	2	
K-6	07000-72018	*	O-RING	17	
K-6	07000-72021	*	O-RING	1	
K-6	07000-73025	*	O-RING	7	
K-6	07000-73028	*	O-RING	10	
K-6	07000-73030	*	O-RING	1	
K-6	07000-73032	*	O-RING	20	
K-6	07000-73035	*	O-RING	5	
K-6	07000-73038	*	O-RING	3	
K-6	07000-73040	*	O-RING	1	
K-6	07000-73045	*	O-RING	1	
K-6	07002-23034	*	O-RING	1	
K-6	07002-21823	*	O-RING	1	
K-7	953-ZZ-00083		LUB. VALVE SEAL KIT		
K-7	07000-73032	*	O-RING	2	
K-7	07000-73035	*	O-RING	3	
K-8	953-ZZ-00091		SOLENOID VALVE SEAL KIT		
K-8	07000-71009	*	O-RING	7	
K-8	985-CV-72118	*	GASKET	1	
K-8	985-CV-72207	*	GASKET	1	
K-9	953-ZZ-00164		TORQUE CONVERTOR COMPLETE SERVICE KIT		
K-9	953-ZZ-00042	*	LOCKUP VALVE SEAL KIT	1	
K-9	953-ZZ-00148	*	TC VALVE SEAL KIT	1	
K-9	953-ZZ-00067	*	REGULATOR VALVE SEAL KIT	1	
K-9	953-ZZ-00131	*	TORQUE CONVERTOR SEAL KIT	1	

SLNO	PART NUMBER		DESCRIPTION	QTY	REMARKS
K-10	953-ZZ-00115		TRANSMISSION COMPLETE SERVICE KIT	1	
K-10	953-ZZ-00156	*	TRANSMISSION CV SEAT SEAL KIT	1	
K-10	953-ZZ-00075	*	TRANS. CONTROL VALVE SEAL KIT	1	
K-10	953-ZZ-00083	*	LUB. VALVE SEAL KIT	1	
K-10	953-ZZ-00091	*	SOLENOID VALVE SEAL KIT	1	
K-10	953-ZZ-00123	*	TRANSMISSION SEAL KIT	1	
K-11	953-ZZ-00123		TRANSMISSION SEAL KIT		
K-11	07000-73022	*	O-RING	5	
K-11	07000-73025	*	O-RING	5	
K-11	985-TM-61092	*	O-RING	2	
K-11	07000-72065	*	O-RING	4	
K-11	07000-73035	*	O-RING	5	
K-11	07000-73028	*	O-RING	2	
K-11	07000-72055	*	O-RING	2	
K-11	07000-72090	*	O-RING	2	
K-11	985-TM-72481	*	GASKET	1	
K-11	985-TM-71566	*	GASKET	1	
K-11	07000-72060	*	O-RING	1	
K-11	07000-72014	*	O-RING	2	
K-11	985-TM-62437	*	SEAL RING	1	
K-11	985-TM-61035	*	SEAL RING	1	
K-11	985-TM-61116	*	SEAL RING	2	
K-11	985-TM-61132	*	SEAL RING	2	
K-11	985-TM-61124	*	SEAL RING	2	
K-11	985-TM-61027	*	SEAL RING	4	
K-11	985-TM-61068	*	SEAL RING	4	
K-11	07002-23634	*	O-RING	1	
K-11	985-TM-91184	*	OIL SEAL	1	
K-11	07000-73025	*	O-RING	1	
K-11	07012-20120	*	O-RING	1	
K-11	07000-75200	*	O-RING	1	
K-11	985-TM-61076	*	O-RING	1	
K-11	07000-72055	*	O-RING	2	

SLNO	PART NUMBER	DESCRIPTION		QTY	REMARKS
K-11	07000-72075	*	O-RING	2	
K-11	07000-72025	*	O-RING	2	
K-12	953-ZZ-00131		TORQUE CONVERTOR SEAL KIT		
K-12	07002-23634	*	O-RING	1	
K-12	07012-20110	*	OIL SEAL	1	
K-12	07000-75150	*	O-RING	1	
K-12	985-TC-61065	*	O-RING	1	
K-12	07000-73032	*	O-RING	1	
K-12	07000-73040	*	O-RING	3	
K-12	07000-73028	*	O-RING	5	
K-12	07000-72020	*	O-RING	2	
K-12	07000-72014	*	O-RING	1	
K-12	07000-72016	*	O-RING	7	
K-12	07000-72095	*	O-RING	1	
K-12	985-TC-71263	*	GASKET	2	
K-12	07000-75230	*	O-RING	2	
K-12	07000-75075	*	O-RING	1	
K-12	07000-73035	*	O-RING	2	
K-12	07000-71006	*	O-RING	3	
K-12	07000-73042	*	O-RING	1	
K-12	07000-72018	*	O-RING	2	
K-12	07000-73025	*	O-RING	1	
K-13	953-HC-00029		STEERING CYLINDER ASSY SEAL KIT		
K-13	07000-12055	*	O-RING	1	
K-13	375-HC-71014	*	WEAR RING	2	
K-13	07001-02055	*	BACKUP RING	2	
K-13	07000-12125	*	O-RING	1	
K-13	CFN44-15252	*	NYLOCK NUT	1	
K-13	CFL10-00093	*	SNAP RING	1	
K-13	375-HC-02018	*	RING PISTON	1	
K-13	985-HC-61076	*	PACKING ROD	1	
K-13	375-HC-71096	*	BACKUP RING	1	
K-13	07000-02060	*	O-RING	4	
K-13	707-56-70580	*	DUST SEAL	1	

SLNO	PART NUMBER		DESCRIPTION	QTY	REMARKS
K-14	953-HC-00012		HOIST CYLINDER SEAL KIT		
K-14	953-HC-91293	*	RING WEAR	2	
K-14	640000452600	*	O-RING	1	
K-14	07155-01435	*	WEAR RING	1	
K-14	155-HC-99216	*	PISTON SEAL	1	
K-14	PB 7325	*	BEARING (7.5")	2	
K-14	CHS02-05240	*	BACKUP RING	1	
K-14	07000-15240	*	O-RING	1	
K-14	707-51-11110	*	PACKING ROD	1	
K-14	07177-01140	*	BUSHING	1	
K-14	CFL10-00135	*	SNAP RING	1	
K-14	198-63-94170	*	DUST SEAL	1	
K-14	VA 3213	*	BEARING	1	
K-14	VA 3219	*	SEAL ROD	1	
K-14	VA 3216	*	WIPER ROD	1	
K-14	PB 6551	*	BEARING	1	
K-14	PB 6552	*	SEAL BUFFER	1	
K-14	PB 6553	*	SEAL ROD	1	
K-14	PB 6554	*	WIPER ROD	1	
K-15	985-SK-01444		SEAL KIT (HOIST VALVE)		
K-15	07000-02015	*	O-RING	1	
K-15	07000-02020	*	O-RING	1	
K-15	07000-02055	*	O-RING	1	
K-15	07000-02075	*	O-RING	1	
K-15	07000-13045	*	O-RING	2	
K-15	07000-12012	*	O-RING	1	
K-15	07000-02065	*	O-RING	2	
K-15	07000-02090	*	O-RING	1	
K-15	07002-01423	*	O-RING	1	
K-15	07002-02434	*	O-RING	1	
K-15	07000-13055	*	O-RING	1	
K-15	07001-02012	*	BACKUP RING	1	
K-15	07001-03045	*	BACKUP RING	1	
K-15	07430-11260	*	OIL SEAL	1	
K-15	07016-10256	*	DUST SEAL	1	

SLNO	PART NUMBER		DESCRIPTION	QTY	REMARKS
K-16	953-SK-00046		REPAIR KIT (RETURN LINE FILTER ASSY)		
K-16	953-HS-63001	*	O-RING (VROA.O) 18*2.5	2	
K-16	953-HS-63034	*	GASKET RF 660 GrH	1	
K-16	953-HS-62987	*	O-RING (HEAD) 164.47*5.33	2	
K-16	953-HS-62979	*	O-RING (ELEMENT) 69.2*5.33	2	
K-17	766-SK-00061		SEAL KIT (RELIEF VALVE)		
K-17	766-SK-15357	*	O-RING	1	
K-17	766-SK-15349	*	O-RING	1	
K-18	953-OC-01054		TRANSMISSION FILTRATION IMPROVEMENT KIT		
K-18	985-HS-11628	*	SUPPORT DELTA DYNE BLOCK	1	
K-18	985-HS-11611	*	REMOTE DELTA DYNE BLOCK	1	
K-18	953-OC-11082	*	VISUAL DP INDICTOR	1	
K-18	985-HS-03066	*	FULL FLOW BYPASS VALVE ASSY	1	
K-18	985-HS-03058	*	FILTER ELEMENT (12 MICRONS)	1	
K-19	985-AX-03018		SEAL KIT (FRONT BRAKE , BRAKE HEAD ASSY)		
K-19	985-AX-13095	*	RETAINER	6	
K-19	985-AX-63072	*	BOOT	6	
K-19	985-AX-73108	*	PAKING	6	
K-19	985-AX-13127	*	RETAINER	3	
K-19	985-AX-73132	*	PAKING	3	
K-20	985-SK-01582		REAR BRAKE CHAMBER REPAIR KIT		
K-20	985-AS-15511	*	SLEEVE	1	
K-20	985-AS-65262	*	PACKING	1	
K-20	985-AS-65538	*	O-RING	1	
K-20	985-AS-65546	*	O-RING	1	
K-20	985-AS-65554	*	O-RING	1	
K-20	985-AS-15569	*	SEAL	1	

SLNO	PART NUMBER		DESCRIPTION	QTY	REMARKS
K-20	985-AS-65579	*	SEAL	1	
K-20	985-AS-65587	*	O-RING	1	
K-20	985-AS-15617	*	FILTER	2	
K-21	985-SK-01574		FRONT BRAKE CHAMBER REPAIR KIT		
K-21	985-AS-65262	*	PACKING	1	
K-21	985-AS-15293	*	FILTER	2	
K-21	985-AS-15325	*	BUSHING	1	
K-21	985-AS-15341	*	CUP	2	
K-21	985-AS-65376	*	O-RING	1	
K-21	985-AS-65384	*	O-RING	1	
K-21	985-AS-03183	*	PISTON ASSY	1	
K-21	985-AS-15447	*	CUP	1	
K-21	985-AS-15455	*	RING BACKUP	1	
K-22	985-SK-01436		SLACK ADJUSTER SERVICE KIT		
K-22	424-35-15280	*	O-RING	2	
K-22	426-35-15260	*	RING	2	
K-22	426-35-15250	*	COVER	2	
K-22	426-35-15240	*	SEAL ASSY	2	
K-22	426-35-15280	*	O-RING	2	
K-22	426-35-15290	*	CAP	2	
K-22	985-AS-63715	*	O-RING	2	
K-23	950-SK-00205		SHUT OFF COCK SERVICE KIT		
K-23	950-AS-13933	*	SEALING RING	1	
K-23	950-AS-12629	*	PLUNGER	1	
K-23	950-AS-13106	*	WASHER	1	
K-23	950-AS-10303	*	VALVE	1	
K-23	950-AS-73055	*	FIBER WASHER	1	
K-23	950-AS-13293	*	TENSION PIN	1	
K-23	950-AS-94809	*	GREASE SACHET	1	
K-24	950-SK-00198		LEVER TYPE CONTROL SERVICE KIT		

SLNO	PART NUMBER		DESCRIPTION	QTY	REMARKS
K-24	950-AS-13577	*	SEALING RING	1	
K-24	950-AS-12491	*	VALVE SPRING	1	
K-24	950-AS-10271	*	VALVE	1	
K-24	950-AS-12475	*	SPRING	1	
K-24	950-AS-63562	*	O-RING	1	
K-24	950-AS-12459	*	PIN	1	
K-24	950-AS-94809	*	GREASE SACHET	1	
K-25	950-SK-00181		DUAL BRAKE VAL.SER.KIT		
K-25	950-AS-12134	*	INTERNAL CIRCLIP	1	
K-25	950-AS-12297	*	WASHER	1	
K-25	950-AS-62128	*	O-RING	1	
K-25	950-AS-62111	*	O-RING	2	
K-25	950-AS-62096	*	O-RING	2	
K-25	950-AS-62103	*	O-RING	2	
K-25	950-AS-12078	*	CONICAL SPRING	2	
K-25	950-AS-12053	*	VALVE	2	
K-25	950-AS-62152	*	O-RING	2	
K-25	950-AS-12312	*	INTERNAL CIRCLIP	1	
K-25	950-AS-62169	*	O-RING	1	
K-25	950-AS-12248	*	GUIDE RING	2	
K-25	950-AS-62233	*	O-RING	1	
K-25	950-AS-12191	*	RUBBER SPRING	1	
K-25	950-AS-12207	*	SPRING SEAT	1	
K-25	950-AS-12223	*	INTERNAL CIRCLIP	1	
K-25	950-AS-62274	*	BOOT	1	
K-25	950-AS-12289	*	INTERNAL CIRCLIP	2	
K-25	950-AS-62793	*	BOOT	1	
K-25	950-AS-94809	*	GREASE SACHET	1	
K-26	950-SK-00149		RE6 RELAY EMER.VALVE		
			SERVICE KIT	1	
K-26	950-AS-11754	*	DIAPHRAGM	1	
K-26	950-AS-11738	*	SPRING	1	
K-26	950-AS-14524	*	SEALING RING	1	
K-26	950-AS-14492	*	SEALING RING	1	
K-26	950-AS-14508	*	SEALING RING	1	
K-26	950-AS-11705	*	SPRING	1	

SLNO	PART NUMBER		DESCRIPTION	QTY	REMARKS
K-26	950-AS-11698	*	VALVE RETAINER	1	
K-26	950-AS-10393	*	VALVE	1	
K-26	950-AS-11876	*	FITTER	1	
K-26	950-AS-10985	*	CHECK VALVE	1	
K-26	950-AS-10993	*	CHECK VALVE SPRING	1	
K-26	950-AS-13577	*	SEALING RING	1	
K-26	950-AS-14484	*	SEALING RING	2	
K-26	950-AS-14468	*	SEALING RING	1	
K-26	950-AS-14451	*	SEALING RING	1	
K-26	950-AS-11665	*	EXHAUST VALVE SEAT	1	
K-26	950-AS-94809	*	GREASE SACHET	1	
K-26	950-AS-14476	*	SEALING RING	1	
K-27	950-SK-00254		GOVERNOR VALVE SERVICE KIT	1	
K-27	950-AS-64656	*	SEALING RING	1	
K-27	950-AS-64648	*	SEALING RING	2	
K-27	950-AS-11502	*	COVER	1	
K-27	950-AS-14319	*	CIRCLIP	1	
K-27	950-AS-11535	*	FILTET	2	
K-27	950-AS-10377	*	INLET/EXHAUST VALVE	1	
K-27	950-AS-11527	*	VALVE SPRING	1	
K-27	950-AS-94809	*	GREASE SACHET	1	
K-28	950-SK-00108		LIMITING & QUICK RELEASE VALVE REPAIR KIT		
K-28	950-AS-13066	*	NYLOCK NUT	2	
K-28	950-AS-10303	*	VALVE	2	
K-28	950-AS-73055	*	FIBER WASHER	2	
K-28	950-AS-63595	*	O-RING	1	
K-28	950-AS-10717	*	PLUNGER	1	
K-28	950-AS-63602	*	O-RING	2	
K-28	950-AS-10158	*	VALVE SPRING	1	
K-28	950-AS-11779	*	VALVE GUIDE	1	
K-28	950-AS-10806	*	VALVE STEM	1	
K-28	950-AS-94809	*	GREASE SACHET	1	
K-28	950-AS-10458	*	EXHAUST CHECK	1	

SLNO	PART NUMBER		DESCRIPTION	QTY	REMARKS
K-29	950-SK-00068		GRADUATED HAND CON. VALVE SERVICE KIT	1	
K-29	950-AS-64201	*	O-RING	1	
K-29	950-AS-63384	*	O-RING	1	
K-29	950-AS-10336	*	INLET & EXHAUST VALVE	1	
K-29	950-AS-63595	*	O-RING	1	
K-29	950-AS-63749	*	O-RING	1	
K-29	950-AS-14232	*	SHIM 0.5mm THICK	AR	
K-29	950-AS-14249	*	SHIM 0.3mm THICK	AR	
K-29	950-AS-14257	*	SHIM 0.1mm THICK	AR	
K-29	950-AS-14079	*	TENSION PIN	1	
K-29	950-AS-61156	*	GAITER	1	
K-29	950-AS-14087	*	SEALING RING	1	
K-29	950-AS-13544	*	SPLIT PIN	1	
K-29	950-AS-10936	*	EXHAUST BANJO	1	
K-29	950-AS-94809	*	GREASE SACHET	1	
K-29	950-AS-64426	*	O-RING	1	
K-30	950-SK-00051		INVERTION VALVE SERVICE KIT		
K-30	950-AS-10271	*	VALVE	1	
K-30	950-AS-63595	*	O-RING	2	
K-30	950-AS-63602	*	O-RING	2	
K-30	950-AS-63473	*	O-RING	1	
K-30	950-AS-10458	*	EXHAUST CHECK	1	
K-30	950-AS-94809	*	GREASE SACHET	1	
K-31	566-35-05014		RETARDER VALVE SERVICE KIT		
K-31	566-35-00012	*	INLET/EXHAUST VALVE ASSY	1	
K-31	566-35-16230	*	O-RING PISTON	1	
K-31	566-35-00022	*	CAM & FOLLOWER ASSY	1	
K-31	566-35-16253	*	FOLLOWER CAM	1	
K-31	566-35-16263	*	CAM	1	
K-31	566-35-16280	*	GASKET	1	
K-31	566-35-16380	*	O-RING HEAD	1	

SLNO	PART NUMBER		DESCRIPTION	QTY	REMARKS
K-32	985-SK-01047		PARKING BRAKE SER.KIT	1	
K-32	985-BP-13034	*	SEAL PISTON	1	
K-32	985-BP-13059	*	INSULATOR PISTON	1	
K-32	985-BP-13075	*	BEARING,THRUST	1	
K-32	985-BP-73089	*	GUSSET ASSY	1	
K-32	985-BP-13107	*	WASHER FLAT	4	
K-32	985-BP-13115	*	BOLT HEX.HEAD	4	
K-32	985-BP-13123	*	BEARING JOURNAL	1	
K-32	985-BP-13131	*	WASHER	1	
K-32	985-BP-73145	*	PACKING	1	
K-32	985-BP-13156	*	WASHER,WASHER SPRING	1	
K-32	985-BP-13189	*	RING RETAINER	1	
K-32	985-BP-13261	*	FITTING PRE.RELIEF	1	
K-33	985-SK-01014		AIR PIPING SER.KIT(1/4")		
K-33	950-AS-23231	*	SLEEVE	40	
K-33	950-AS-13228	*	UNION NUT	40	
K-33	950-AS-24617	*	INSERT	40	
K-33	950-AS-13511	*	LOCK NUT	40	
K-33	950-AS-15586	*	SPECIAL WASHER	25	
K-33	950-AS-24577	*	ELBOW	10	
K-33	880001000014	*	TUBE(1/4")OD 10mts	1	
K-33	950-AS-14354	*	PIPE CONNECTOR	10	
K-34	985-SK-01022		AIR PIPING SER.KIT(3/8")	1	
K-34	950-AS-23289	*	SLEEVE	40	
K-34	950-AS-13277	*	UNION NUT	40	
K-34	950-AS-24609	*	INSERT	40	
K-34	950-AS-23507	*	ELBOW	10	
K-34	950-AS-65628	*	SEAL RING	25	
K-34	950-AS-15613	*	WASHER	25	
K-34	950-AS-65522	*	SEALING RING	25	
K-34	950-AS-15586	*	SPECIAL WASHER	25	
K-34	880001000015	*	TUBE(3/8")OD 10mts	1	
K-34	950-AS-14362	*	PIPE CONNECTOR	10	

SLNO	PART NUMBER		DESCRIPTION	QTY	REMARKS
K-35	985-SK-01039		AIR PIPING SER.KIT(5/8")	1	
K-35	950-AS-23401	*	SLEEVE	40	
K-35	950-AS-13796	*	UNION NUT	40	
K-35	950-AS-65522	*	SEALING RING	25	
K-35	950-AS-15613	*	SPECIAL WASHER	25	
K-35	950-AS-23844	*	ELBOW	10	
K-35	880001000016	*	TUBE(5/8")OD 10mts	1	
K-35	950-AS-13941	*	PIPE CONNECTOR	10	
K-36	985-SK-01517		INJECTOR SERVICE KIT (AUTO GRE)		
K-36	985-AL-12552	*	ADJUSTING SLEEVE	1	
K-36	985-AL-12366	*	PISTON ROD	1	
K-36	985-AL-62376	*	O-RING	1	
K-36	985-AL-12399	*	SPRING SEAT	1	
K-36	985-AL-12414	*	PLUNGER	1	
K-36	985-AL-12422	*	INLET DISC	1	
K-36	985-AL-12430	*	ADAPTOR BOLT	1	
K-36	985-AL-12447	*	GASKET	1	
K-36	985-AL-12455	*	ADAPTOR GASKET	1	
K-36	985-AL-72469	*	PACKING	1	
K-36	985-AL-72477	*	PACKING	1	
K-36	985-AL-72485	*	PACKING	1	
K-36	985-AL-62498	*	O-RING	1	
K-36	985-AL-12503	*	WASHER	1	
K-37	985-SK-01217		AIR PRESSURE REGULATOR SERVICE KIT		
K-37	985-AL-61587	*	O-RING	1	
K-37	985-AL-11597	*	WASHER	1	
K-37	985-AL-61606	*	V-SEAL	1	
K-37	985-AL-61615	*	SEAL	1	
K-37	985-AL-61647	*	V-SEAL	1	
K-37	985-AL-11686	*	VALVE	1	
K-37	985-AL-61716	*	SEAL	1	

SLNO	PART NUMBER		DESCRIPTION	QTY	REMARKS
K-38	985-SK-01485		GASKET & O-RING KIT		
K-38	985-AL-61517	*	O-RING	1	
K-38	985-AL-71529	*	GASKET	1	
K-38	985-AL-61606	*	O-RING	1	
K-38	985-AL-61622	*	O-RING	1	
K-38	985-AL-11637	*	WASHER	1	
K-38	985-AL-61647	*	O-RING	1	
K-38	985-AL-11686	*	PACKING NUT	1	
K-38	985-AL-11694	*	PACKING CAP	1	
K-38	985-AL-11815	*	WASHER	2	
K-38	985-AL-12041	*	SEALING RING	1	
K-38	985-AL-12358	*	COPPER WASHER	1	
K-38	985-AL-72096	*	PACKING	1	
K-38	985-AL-62108	*	O-RING	1	
K-38	985-AL-72274	*	PACKING	1	
K-39	985-ZZ-14888		HOSE KITY(REAR BRAKE)	1	
K-39	07102-20304	*	HOSE	1	
K-39	07102-20316	*	HOSE	1	
K-39	07113-00509	*	HOSE	2	
K-39	07102-20309	*	HOSE	1	
K-39	07102-20330	*	HOSE	1	
K-39	07113-00511	*	HOSE	2	
K-40	985-SK-01428		SERVICE KIT (AIR CYLINDER)	1	
K-40	581-43-13420	*	SEAL	1	
K-40	581-43-13430	*	SEAL	1	
K-40	581-43-13440	*	O-RING	2	
K-40	581-43-13450	*	O-RING	1	
K-40	581-43-13460	*	DUST SEAL	1	
K-41	985-TI-02089		A.C. CHARING KIT (RED DOT MAKE)		
K-41	985-TI-03011	*	VACCUM PUMP	1	
K-41	985-TI-03028	*	MANIFOLD GAUGE SET R12	1	
K-41	985-TI-03036	*	LEAK DETECTOR	1	
K-41	985-TI-11452	*	MANIFOLD ASSY R134A	1	

SLNO	PART NUMBER		DESCRIPTION	QTY	REMARKS
K-41	985-TI-61462	*	CHARGING HOSE (YELLOW)	1	
K-41	985-TI-61479	*	CHARGING HOSE (BLUE)	1	
K-41	985-TI-61487	*	CHARGING HOSE (RED)	1	
K-42	985-AX-00507		DIFFERENTIAL SERVICE KIT	1	
K-42	985-AX-16627	*	LOCK PLATE	1	
K-42	07012-00150	*	SEAL OIL	1	
K-42	CHS01-05320	*	O-RING	1	
K-42	985-AXB-9077	*	SHIM ASSY	1	
K-42	CHS01-05240	*	O-RING	1	
K-42	CHS01-05110	*	O-RING	1	
K-42	985-AX-65487	*	O-RING	1	
K-43	985-AX-00515		FINAL DRIVE SERVICE KIT	2	
K-43	CHS01-05320	*	O-RING	1	
K-43	985-AX-03618	*	SHIM ASSY	1	
K-43	985-AX-15371	*	LOCK	4	
K-43	985-AX-15144	*	RING, SNAP	1	
K-43	CHS03-02434	*	O-RING	1	
K-43	985-AX-65324	*	O-RING	1	
K-43	CHS01-03030	*	O-RING	1	
K-43	CPL09-12430	*	PLUG	3	
K-43	CHS03-03634	*	O-RING	1	
K-43	985-AX-65332	*	O-RING	1	
K-43	CPL09-11215	*	PLUG	3	
K-44	985-AX-03001		FRONT BRAKE OVERHAUL KIT	1	
K-44	985-AX-13095	*	RETAINER	6	
K-44	985-AX-63072	*	BOOT	6	
K-44	985-AX-73108	*	PACKING	6	
K-44	985-AX-13127	*	RETAINER	3	
K-44	985-AX-73132	*	PAKING	3	
K-44	985-AX-13062	*	CRRIOR/LINING SET	1	
K-44	985-AX-13087	*	PISTON	1	
K-45	985-SK-01639		DAMPER SERVICE KIT	1	
K-45	985-DA-02046	*	SEAL OIL	1	

SLNO	PART NUMBER		DESCRIPTION	QTY	REMARKS
K-45	CFL01-19530	*	RING SNAP	1	
K-45	985-DA-02021	*	SEAL OIL	1	
K-45	CHS01-15170	*	O-RING	1	
K-46	953-HSB-0241		O-RING KIT (HYD. TANK INST)	1	
K-46	CHS01-13048	*	O-RING	1	
K-46	CHS01-12010	*	O-RING	2	
K-46	CHS01-13045	*	O-RING	2	
K-46	CHS01-13055	*	O-RING	1	
K-46	CHS01-12140	*	O-RING	3	
K-46	CHS01-13035	*	O-RING	1	
K-46	CHS01-11210	*	O-RING	2	
K-47	953-HSB-0063		O-RING KIT (EMERGENCY STG. INST)	1	
K-47	MTC 9899	*	O-RING	2	
K-47	TH 5604	*	O-RING	3	
K-47	SV 2581	*	O-RING	2	
K-47	CHS01-13025	*	O-RING	2	
K-47	CHS01-13030	*	O-RING	1	
K-47	CHS01-13035	*	O-RING	1	
K-48	953-HSB-0071		HOSE ASSY KIT (EMERGENCY STG. INST)	1	
K-48	953-HS-02698	*	HOSE ASSY	1	
K-48	953-HS-02681	*	HOSE ASSY	1	
K-48	953-HS-02657	*	HOSE ASSY	1	
K-49	953-OCB-0024		O-RING KIT (TRANS. OIL COOLER & PIPING INST)	1	
K-49	CHS01-72075	*	O-RING	2	
K-49	CHS01-12130	*	O-RING	1	
K-49	CHS01-13035	*	O-RING	3	
K-49	CHS01-13048	*	O-RING	13	
K-49	CHS01-12060	*	O-RING	4	

SLNO	PART NUMBER		DESCRIPTION	QTY	REMARKS
K-50	953-OCB-0032		HOSE KIT (TRANS. OIL COOLER & PIPING INST)	1	
K-50	452-HS-02094	*	HOSE ASSY	2	
K-50	CHH15-02406	*	HOSE ASSY	1	
K-50	CHH15-02047	*	HOSE ASSY	1	
K-50	CHH30-07422	*	HOSE ASSY	1	
K-50	CHH11-02410	*	HOSE ASSY	2	
K-51	950-SK-00035		QUICK RELEASE VALVE SEAL KIT	1	
K-51	950-AS-10303	*	VALVE	2	
K-51	950-AS-73055	*	FABRIC WASHER	2	
K-51	950-AS-63602	*	O-RING	2	
K-51	950-AS-98409	*	GREASE SACHET	1	
K-51	950-AS-10458	*	EXHAUST CHECK	1	
K-52	953-HSB-0241		O-RING KIT (HYD. TANK ASSY SPLIT TYPE)	1	
K-52	CHS01-11210	*	O-RING	2	
K-52	CHS01-13035	*	O-RING	2	
K-52	CHS01-12140	*	O-RING	4	
K-52	CHS01-13055	*	O-RING	1	
K-52	CHS01-13045	*	O-RING	2	
K-52	CHS01-12010	*	O-RING	2	
K-52	CHS01-13048	*	O-RING	1	
K-53	953-HSB-0258		O-RING KIT (BRAKE OIL PIPING INST)	1	
K-53	CHS01-12070	*	O-RING	2	
K-53	CHS01-12130	*	O-RING	1	
K-53	CHS01-13048	*	O-RING	35	
K-53	CHS01-12060	*	O-RING	4	
K-53	CHS01-13045	*	O-RING	2	
K-53	CHS01-12085	*	O-RING	1	
K-53	CHS01-12075	*	O-RING	1	
K-53	TL 3995	*	O-RING	5	

SLNO	PART NUMBER		DESCRIPTION	QTY	REMARKS
K-54	953-HSB-0266		HOSE ASSY KIT		
			(BRAKE OIL PIPING INST)	1	
K-54	953-HS-02381	*	HOSE ASSY	5	
K-54	985-PH-02427	*	HOSE ASSY	3	
K-54	953-HS-03142	*	HOSE ASSY	2	
K-54	CHH26-12410	*	HOSE ASSY	1	
K-54	953-HS-02487	*	HOSE ASSY	1	
K-55	953-HSB-0282		O-RING KIT (HOIST PIPING KIT)	1	
K-55	CHS01-12130	*	O-RING	1	
K-55	CHS01-12070	*	O-RING	2	
K-55	CHS01-13048	*	O-RING	19	
K-55	CHS01-12060	*	O-RING	2	
K-55	CHS01-13035	*	O-RING	2	
K-55	CHS01-13045	*	O-RING	4	
K-55	CHS01-13050	*	O-RING	1	
K-55	CHS01-13032	*	O-RING	2	
K-55	CHS01-13025	*	O-RING	7	
K-55	CHS01-12075	*	O-RING	1	
K-56	953-HSB-0299		HOSE ASSY KIT		
			(HOIST PIPING INST)	1	
K-56	CHH09-02410	*	HOSE ASSY	2	
K-56	953-HS-02276	*	HOSE ASSY	1	
K-56	953-PH-02439	*	HOSE ASSY	1	
K-56	CHH13-12412	*	HOSE ASSY	2	
K-56	953-HS-02251	*	HOSE ASSY	2	
K-57	953-HSB-0388		HOSE ASSY KIT		
			(STEERING PIPING INST)	1	
K-57	CHH13-02410	*	HOSE ASSY	1	
K-57	953-PH-02252	*	HOSE ASSY	1	
K-57	953-HS-02551	*	HOSE ASSY	1	
K-57	953-HS-03248	*	HOSE ASSY	1	
K-57	953-HS-02592	*	HOSE ASSY	1	
K-57	953-PH-02471	*	HOSE ASSY	1	
K-57	953-PH-03208	*	HOSE ASSY	1	

SLNO	PART NUMBER		DESCRIPTION	QTY	REMARKS
K-57	CHH13-01208	*	HOSE ASSY	3	
K-57	953-HS-03134	*	HOSE ASSY	1	
K-57	953-HS-02608	*	HOSE ASSY	2	
K-58	953-HSB-0452		O-RING KIT (STEERING PIPING INST)	1	
K-58	CHS01-13048	*	O-RING	5	
K-58	CHS01-13030	*	O-RING	6	
K-58	CHS01-13025	*	O-RING	8	
K-58	TC 9898	*	O-RING	2	
K-58	TH 5604	*	O-RING	1	
K-58	VG 9097	*	O-RING	6	
K-58	TC 9899	*	O-RING	4	
K-58	VG 9096	*	O-RING	1	
K-58	594300250240	*	O-RING	4	
K-58	563400004540	*	O-RING	2	
K-59	953-OCB-0073		HOSE KIT (TRANS. OIL COOLER & PIPING INST. WITH PALL FILTER)	1	
K-59	CHH15-02407	*	HOSE ASSY	1	
K-59	CHH15-02406	*	HOSE ASSY	1	
K-59	CHH26-12011	*	HOSE ASSY	1	
K-59	CHH26-12407	*	HOSE ASSY	1	
K-60	953-OCB-0081		O-RING KIT (TRANS. OIL COOLER & PIPING INST. WITH PALL FILTER)	1	
K-60	CHS01-12060	*	O-RING	4	
K-60	CHS01-13048	*	O-RING	7	
K-60	CHS01-12130	*	O-RING	1	
K-60	CHS01-72075	*	O-RING	2	
K-60	CHS01-33035	*	O-RING	3	
K-60	CHS01-33032	*	O-RING	2	

SLNO	PART NUMBER		DESCRIPTION	QTY	REMARKS
K-61	953-OCB-0049		FILTER ASSY KIT (WITH ELEMENT & SEAL KIT)	1	
K-61	953-OC-11414	*	FILTER ELEMENT (FLUSHING)	1	
K-61	953-OC-11439	*	CLOGGING INDICATOR	1	
K-61	953-SK-00087	*	SEAL KIT	1	
K-61	953-OC-02212	*	FILTER ASSY	1	

XIV
NUMERICAL INDEX

PARTNO	FIG	ITEM	PARTNO	FIG	ITEM	PARTNO	FIG	ITEM
3085140	16	04	01599-01011	59	22	04059-01632	165	07
3160404	16	02	01599-01011	59	28	04065-03212	170	16
3348747	16	03	01599-01011	59	34	04071-00160	73	04
3408345	16	07	01599-01011	59	39	04082-00212	126	12
3865337	16	05	01602-20825	154	27	04205-01028	154	18
3865337	16	06	01602-20825	154	33	06000-32030	70	31
3865346	16	01	01602-20825	154	38	06120-02016	154	24
4002064	16	08	01602-21030	58	05	06120-02520	154	28
4002064	16	09	01602-21030	59	19	07000-02015	155	24
40558222	14	37	01602-21030	154	43	07000-02015	215	K-15
01010-50820	154	26	01602-21236	56	17	07000-02020	154	23
01010-50820	154	32	01602-21236	57	33	07000-02020	215	K-15
01010-50830	154	37	01602-21236	58	16	07000-02055	155	07
01010-51020	57	29	01602-21236	58	29	07000-02055	215	K-15
01010-51030	154	42	01602-21236	59	06	07000-02060	126	37
01010-51055	57	25	01602-21236	59	09	07000-02060	161	19
01010-51055	58	03	01602-21236	59	26	07000-02060	215	K-13
01010-51060	57	26	01602-21236	59	32	07000-02065	155	28
01010-51060	58	04	01602-21236	154	12	07000-02065	215	K-15
01010-51230	59	25	01602-21236	154	48	07000-02075	154	44
01010-51230	59	31	01602-21442	170	13	07000-02075	215	K-15
01010-51235	57	32	01602-21442	170	19	07000-02090	154	10
01010-51235	154	11	01602-21648	55	15	07000-02090	154	41
01010-51280	58	18	01602-21648	154	46	07000-02090	215	K-15
01010-51280	59	04	01602-21648	155	26	07000-05290	66	08
01010-51285	59	05	01602-21648	155	31	07000-05315	66	18
01010-51290	154	08	01602-21648	155	36	07000-11823	71	15
01010-51425	57	03	01641-21016	154	19	07000-12012	155	10
01010-51425	57	08	01643-31032	57	36	07000-12012	215	K-15
01010-51430	57	05	01643-31032	58	26	07000-12055	161	12
01010-51645	155	30	01643-31032	58	32	07000-12055	215	K-13
01010-51650	155	25	01643-31032	58	36	07000-12060	58	17
01010-51655	55	14	01643-31032	59	23	07000-12125	161	13
01010-51675	155	35	01643-31032	59	29	07000-12125	215	K-13
01010-51680	59	37	01643-31032	59	35	07000-13025	156	38
01011-51010	59	18	01643-31032	59	40	07000-13030	72	36
01011-51610	155	29	01643-31445	57	04	07000-13035	59	17
01124-82255	156	25	01643-31445	57	06	07000-13045	154	16
01190-01208	162	13	01643-31445	57	09	07000-13045	155	05
01252-31240	154	47	01643-51232	56	13	07000-13045	155	23
01252-31645	154	45	01643-51232	58	10	07000-13045	155	33
01580-10605	155	18	01643-51232	59	15	07000-13045	215	K-15
01580-11210	57	11	02750-24500	05	32	07000-13048	59	07
01599-01011	57	35	04010-60519	154	35	07000-13048	59	12
01599-01011	58	22	04020-01228	170	14	07000-13048	156	34
01599-01011	58	25	04020-01842	31	10	07000-13055	155	32
01599-01011	58	31	04020-01842	170	10	07000-13055	215	K-15
01599-01011	58	35	04050-03015	154	20	07000-15240	156	18

PARTNO	FIG	ITEM	PARTNO	FIG	ITEM	PARTNO	FIG	ITEM
07000-15240	215	K-14	07000-73032	215	K-7	07003-13036	100	03
07000-15320	72	03	07000-73032	215	K-12	07003-13036	102	03
07000-15485	71	46	07000-73035	215	K-2	07012-00150	70	36
07000-15500	71	34	07000-73035	215	K-4	07012-00150	215	K-42
07000-22010	55	11	07000-73035	215	K-5	07012-20110	215	K-12
07000-25165	55	12	07000-73035	215	K-6	07012-20120	215	K-11
07000-42018	94	09	07000-73035	215	K-7	07016-10256	154	30
07000-71006	215	K-3	07000-73035	215	K-11	07016-10256	215	K-15
07000-71006	215	K-12	07000-73035	215	K-12	07042-00312	98	01
07000-71009	215	K-6	07000-73038	215	K-3	07042-20108	58	13
07000-71009	215	K-8	07000-73038	215	K-4	07042-20415	32	02
07000-72010	215	K-3	07000-73038	215	K-6	07043-00211	98	02
07000-72012	215	K-6	07000-73040	215	K-4	07102-20304	102	15
07000-72014	215	K-4	07000-73040	215	K-6	07102-20304	215	K-39
07000-72014	215	K-11	07000-73040	215	K-12	07102-20309	102	07
07000-72014	215	K-12	07000-73042	215	K-5	07102-20309	215	K-39
07000-72015	215	K-6	07000-73042	215	K-12	07102-20316	102	18
07000-72016	215	K-3	07000-73045	215	K-2	07102-20316	215	K-39
07000-72016	215	K-12	07000-73045	215	K-6	07102-20330	102	11
07000-72018	215	K-2	07000-75075	215	K-12	07102-20330	215	K-39
07000-72018	215	K-5	07000-75150	215	K-12	07113-00509	102	21
07000-72018	215	K-6	07000-75200	215	K-11	07113-00509	215	K-39
07000-72018	215	K-12	07000-75230	215	K-12	07113-00511	102	31
07000-72020	215	K-4	07001-02012	155	11	07113-00511	102	32
07000-72020	215	K-12	07001-02012	215	K-15	07113-00511	215	K-39
07000-72021	215	K-6	07001-02055	161	14	07114-01410	58	06
07000-72025	215	K-11	07001-02055	215	K-13	07114-01410	59	11
07000-72055	215	K-11	07001-03045	155	06	07118-01406	57	18
07000-72055	215	K-11	07001-03045	215	K-15	07118-01407	56	09
07000-72060	215	K-11	07001-05165	55	13	07118-01408	56	09
07000-72065	215	K-11	07002-01423	155	20	07137-06010	126	48
07000-72075	215	K-11	07002-01423	215	K-15	07137-06010	161	10
07000-72090	215	K-11	07002-02034	102	22A	07145-00060	126	25
07000-72095	215	K-12	07002-02034	102	30	07145-00090	73	12
07000-73022	215	K-4	07002-02434	155	22	07155-01435	156	23
07000-73022	215	K-11	07002-02434	215	K-15	07155-01435	215	K-14
07000-73025	215	K-6	07002-12434	72	24	07165-15252	161	15
07000-73025	215	K-11	07002-13624	68	07	07177-01140	156	16
07000-73025	215	K-11	07002-13634	69	03	07177-01140	215	K-14
07000-73025	215	K-12	07002-13634	69	05	07177-07030	161	16
07000-73028	215	K-2	07002-13634	72	42	07179-00093	161	17
07000-73028	215	K-4	07002-21823	215	K-6	07202-50610	85	24
07000-73028	215	K-6	07002-22434	215	K-4	07214-50610	85	30
07000-73028	215	K-11	07002-23034	215	K-6	07238-00522	102	33
07000-73028	215	K-12	07002-23534	215	K-4	07238-10210	101	20
07000-73030	215	K-4	07002-23634	215	K-11	07239-12410	155	21
07000-73030	215	K-6	07002-23634	215	K-12	07261-21420	100	09
07000-73032	215	K-6	07002-24234	215	K-5	07261-21420	101	06

PARTNO	FIG	ITEM	PARTNO	FIG	ITEM	PARTNO	FIG	ITEM
07261-21445	100	08	113-CV-11419	48	10	375-HC-71014	215	K-13
07281-00259	101	07	113-CV-11419	49	07	375-HC-71096	161	09
07282-04311	56	18	113-CV-11443	49	09	375-HC-71096	215	K-13
07282-04311	57	28	113-CV-11468	49	10	375-VL-11278	154	31
07283-23442	57	34	113-TM-12073	40	06	380-CV-11211	48	06
07283-23442	58	21	113-TM-12316	35	06	380-CV-11455	48	25
07283-23442	59	38	113-TM-12316	35	22	380-CV-11608	49	14
07283-24346	58	24	125-CV-11283	35	07	424-35-15280	215	K-22
07283-24346	58	30	125-CV-11283	36	07	426-35-15240	215	K-22
07283-24346	58	34	125-CV-11672	35	05	426-35-15250	215	K-22
07283-24346	59	21	125-CV-11704	36	05	426-35-15260	215	K-22
07283-24346	59	27	125-CV-11712	41	14	426-35-15280	215	K-22
07283-24346	59	33	125-OC-02002	173	01	426-35-15290	215	K-22
07323-30200	98	14	125-TM-13736	41	02	451-DZB-0023	208	01
07326-10302	98	03	125-TM-13777	34	11	451-EG-11875	14	60
07326-10302	98	05	125-TM-23789	46	34	451-EG-11875	11	44
07371-31465	56	11	125-TM-93457	41	12	451-HP-61744	03	06
07371-31465	57	20	130-TM-93106	44	39	451-HP-61752	03	07
07371-31465	58	08	130-TM-93122	44	36	451-TI-02016	209	14
07371-31465	59	13	130-TM-93122	45	28	451-TI-11023	209	04
07372-21240	56	12	135-TM-92214	41	06	451-TI-11048	209	01a
07372-21240	56	16	141-60-32170	154	17	451-TI-11056	209	01b
07372-21240	57	16	155-HC-99216	156	22	451-TI-11064	209	01c
07372-21240	57	21	155-HC-99216	215	K-14	451-TI-11072	209	01d
07372-21240	58	09	198-63-94170	156	14	451-TI-11081	209	01e
07372-21240	58	15	198-63-94170	215	K-14	451-TI-11097	209	01f
07372-21240	59	08	25mm X t2	139	28	451-TI-11129	209	14a
07372-21240	59	14	283-95-14500	14	64	451-TI-11137	209	14b
07430-11260	154	29	283-95-14500	91	25	451-TI-11145	209	14c
07430-11260	215	K-15	287-09-11140	20	39	451-TI-11153	209	14d
07812-00246	98	04	287-09-11240	20	37	451-TI-11161	209	14e
08022-04001	19	10	355-AX-25575	68	08	451-TI-11178	209	14f
08027-10210	20	38	355-AX-25575	69	07	451-TI-11186	209	14g
08027-10210	86	26	375-AX-61728	66	27	451-TI-11194	209	14h
08027-10260	20	36	375-AX-61728	71	05	451-TI-11202	209	14i
08027-10260	86	25	375-CV-11749	155	17	451-TI-11218	209	14j
08027-11000	86	27	375-CV-11751	155	14	451-TI-11226	209	22
08027-12000	86	28	375-CV-11757	155	19	451-TI-11234	209	11
08036-02514	05	37	375-CV-11798	155	09	451-TI-11242	209	07
08050-02710	15	09	375-CV-11821	155	15	451-TI-11259	209	17
08086-20000	11	07	375-CV-11838	155	13	451-TI-11275	209	15
09019-08035	209	23	375-CV-11862	155	12	451-TI-11283	209	10
09280-10020	77	07	375-HC-02018	161	02	451-TK-11272	153	22
110-HM-21372	162	11	375-HC-02018	215	K-13	451-WC-11012	206	05
113-CV-11395	48	11	375-HC-02026	161	03	452-AS-10212	103	26
113-CV-11395	49	08	375-HC-11552	161	07	452-CV-81579	50	12
113-CV-11402	48	09	375-HC-19004	161	06	452-EG-03084	13	47
113-CV-11402	49	06	375-HC-71014	161	08	452-EG-11249	13	55

PARTNO	FIG	ITEM	PARTNO	FIG	ITEM	PARTNO	FIG	ITEM
452-EG-11257	13	51	564300004540	167	87	701-50-51111	155	02
452-HS-02094	215	K-50	564300004640	135	15	701-51-00040	155	
452-HS-15048	101	21	564300004640	215	K-1	701-51-00050	154	
452-PT-02094	56	22	564300004641	136	17	701-51-31210	154	06
452-PT-02094	57	41	564300007340	05	09	701-51-32120	154	03
464310000130	06	01	564329000230	142	05	701-51-32130	154	15
464310000230	06	02	565400001840	125	03	701-51-32160	154	34
466804000130	86	11	565410000340	167	97	701-51-32190	154	40
561-06-61510	15	03	565410150000	158		701-51-32240	154	22
561-15-45720	51	08	565410150000	167	96	701-51-32250	154	25
561-15-55650	53		565410150130	158	02	701-51-32270	154	39
561-30-11520	76	05	565410150260	158	04	701-51-33190	154	05
561-30-11520	77	05	565410150330	158	05	701-51-33290	155	34
561-30-11540	76	06	565410150460	158	07	701-51-35110	154	01
561-30-11540	77	06	565410160000	158	01	701-51-35120	154	21
561-35-61201	96	16	566-35-00012	215	K-31	701-51-35130	154	36
561600000330	08	31	566-35-00022	215	K-31	701-51-35140	154	09
561-63-22620	156	04	566-35-05014	215	K-31	701-51-35150	154	07
561-63-22780	156	28	566-35-05014	215	K-31	701-51-35160	155	08
561-81-13330	76	03	566-35-16230	215	K-31	701-51-35170	155	27
561-81-13330	77	03	566-35-16253	215	K-31	701-51-35180	155	01
561813040000	190	05	566-35-16263	215	K-31	701-51-42001	154	
561816000001	209	25	566-35-16280	215	K-31	701-51-42001	155	
561816000100	209	25d	566-35-16380	215	K-31	701-53-31120	154	13
561816000200	209	25e	566-63-22880	156	31	701-53-31130	154	14
561816000300	209	25f	568-40-11310	126	07	701-53-33290	155	03
561816000400	209	25g	568-46-11472	73	06	701-53-33350	154	02
561816000500	209	25h	571809000230	142	06	701-53-33360	154	04
561816000600	209	25i	571836000130	138	29	705-11-43530	170	
561816000700	209	25j	581-06-15320	11	23	705-12-44010	56	01
561816000800	209	25k	581-43-13420	215	K-40	705-17-04120	170	03
561816000900	209	25l	581-43-13430	215	K-40	705-17-04310	170	15
561816001100	209	NS	581-43-13440	215	K-40	705-17-04382	170	09
561816001200	209	NS	581-43-13450	215	K-40	705-17-04441	170	07
561816001300	209	NS	581-43-13460	215	K-40	705-17-04471	170	08
561816010000	209	25a	594300250240	167	46	705-17-04481	170	17
561816010100	209	25b	594300250240	215	K-58	705-17-04520	170	01
561816010200	209	25c	649000010800	14	72	705-17-04611	170	06
561816020000	209	NS	640000144000	153	04	705-17-04660	170	12
561842000400	11	01	640000452500	156	06	705-17-04730	170	11
561842000700	11	48	640000452600	156	24	705-17-43010	170	02
561842000900	11	02	640000452600	215	K-14	705-17-43450	170	04
561842001100	11	03	649000025610	08	30	705-17-43510	170	05
561842002200	14	71	649000038800	13	57	705-19-03470	170	18
561842002302	11	43	649000063300	147	03	707-51-11110	156	17
561842002302	14	59	649000078100	147	05	707-51-11110	215	K-14
562-97-11140	91	05	700-80-51160	155	16	707-56-70580	161	11
563400004540	215	K-58	701-30-51130	155	04	707-56-70580	215	K-13

PARTNO	FIG	ITEM	PARTNO	FIG	ITEM	PARTNO	FIG	ITEM
710-10-18310	32	63	766-SK-00061	164		787-EG-81116	14	10
711-28-36560	51	02	766-SK-00061	215	K-17	787-EG-81157	11	08
766 EG 02075	11	20	766-SK-00061	215	K-17	787-EG-81157	11	10
766-FE-01059	137	07	766-SK-15349	215	K-17	787-EG-81157	11	38
766-HS-02178	171	24	766-SK-15357	215	K-17	787-EG-81157	11	52
766-HS-02786	167	30	774-EG-02019	12	01	787-EG-81157	13	66
766-HS-02956	168	16	776-HS-15195	164	01	787-EG-81173	11	09
766-HS-02964	168	26	776-HS-15202	164	02	787-EG-81173	11	13
766-HS-11093	167	38	778-AC-02131	206	02	787-EG-81181	11	12
766-HS-12416	168	28	778-AC-02148	206	52	787-EG-81198	11	11
766-HS-12424	168	29	778-AC-12281	206	25	787-EG-81198	11	39
766-HS-12457	167	37	778-AC-12298	206	24	787-EG-81198	13	14
766-HS-12473	167	35	778-AC-12305	206	26	787-EG-81205	13	63
766-HS-12676	168	38	778-AC-12313	206	27	787-HS-02802	153	57
766-HS-14482	168	35	778-AC-61817	206	43	880001000014	215	K-33
766-HS-14499	168	32	778-AC-62218	206	06	880001000015	118	25
766-HS-14814	128	02	778-AC-62226	206	41	880001000015	215	K-34
766-HS-14822	128	03	778-AC-62234	206	42	880001000016	118	26
766-HS-14847	128	05	778-AS-01121	102	01	880001000016	215	K-35
766-HS-14855	128	06	778-AS-02053	168	09	905-AS-12394	104	38
766-HS-14863	128	09	778-AS-02053	172	43	935-AS-02057	85	25
766-HS-14888	128	11	778-AS-02078	94	14	935-AS-02387	87	25
766-HS-14896	128	12	778-AX-92189	66	05	935-AS-02395	87	26
766-HS-14903	128	13	778-BD-10236	144	13	935-AS-02395	96	05
766-HS-14911	128	14	778-CC-02119	139	04	935-AS-03545	88	09
766-HS-14928	128	15	778-CC-10324	139	33	935-AS-66628	86	31
766-HS-14936	128	16	778-CC-10357	138	53	935-AS-71886	103	23
766-HS-14944	128	17	778-CC-10365	138	54	935-AS-72039	103	32
766-HS-15219	164	03	778-CC-10373	139	21	935-CC-01034	17	24
766-HS-15227	164	04	778-CC-10584	139	30	935-CC-01059	138	51
766-HS-15235	164	05	778-CC-60026	139	42	935-CC-01067	138	52
766-HS-15243	164	06	778-CC-60091	139	19	935-CH-03179	138	18
766-HS-15251	164	07	778-HP-10239	138	32	935-CH-11368	169	10
766-HS-15268	164	08	778-HS-02496	167	84	935-DZ-11643	127	01
766-HS-15276	164	09	778-HS-03151	153	05	935-EG-02565	13	52
766-HS-15284	164	10	778-RC-70056	138	50	935-EG-11117	11	54
766-HS-15292	164	11	778-SS-02045	125	02	935-EG-11117	20	18
766-HS-15308	164	12	778-SS-02061	125	05	935-EG-11133	11	06
766-HS-15316	164	13	778-SS-10518	125	16	935-EG-11393	13	39
766-HS-15324	164	14	787-AS-70239	103	34	935-EG-11669	13	38
766-HS-15332	164	15	787-AS-70344	103	35	935-HC-11234	156	27
766-HS-15349	164	16	787-EG-02035	13	56	935-PH-03151	171	76
766-HS-15357	164	17	787-EG-11026	14	73	935-SS-02038	125	01
766-HS-15365	164	18	787-EG-81084	13	50	935-TI-02191	209	18
766-HS-15373	164	19	787-EG-81084	14	09	935-TI-03009	209	18a
766-HS-15381	164	20	787-EG-81092	13	01	935-TI-11774	209	24
766-HS-15398	164	21	787-EG-81092	14	08	935-ZZ-20157	207	22
766-HS-15405	164	22	787-EG-81116	13	03	950-AS-02017	87	31

PARTNO	FIG	ITEM	PARTNO	FIG	ITEM	PARTNO	FIG	ITEM
950-AS-02099	95	18	950-AS-10336	215	K-29	950-AS-11502	116	13
950-AS-02099	112		950-AS-10377	116	17	950-AS-11502	215	K-27
950-AS-02106	95	24	950-AS-10377	215	K-27	950-AS-11519	116	11
950-AS-02106	115		950-AS-10393	114	16	950-AS-11527	116	18
950-AS-02114	85	16	950-AS-10393	215	K-26	950-AS-11527	215	K-27
950-AS-02114	87	09	950-AS-10458	112	14	950-AS-11535	116	16
950-AS-02114	97	03	950-AS-10458	115	17	950-AS-11535	215	K-27
950-AS-02171	97	24	950-AS-10458	215	K-28	950-AS-11543	116	03
950-AS-02188	90	33	950-AS-10458	215	K-30	950-AS-11551	116	04
950-AS-02188	106		950-AS-10458	215	K-51	950-AS-11568	116	06
950-AS-02236	91	21	950-AS-10466	113	10	950-AS-11576	116	05
950-AS-02236	92	16	950-AS-10474	115	03	950-AS-11584	116	07
950-AS-02236	97	12	950-AS-10709	112	13	950-AS-11592	116	08
950-AS-02236	111		950-AS-10709	115	13	950-AS-11657	114	28
950-AS-02236	118	01	950-AS-10717	112	06	950-AS-11665	114	26
950-AS-02277	116		950-AS-10717	215	K-28	950-AS-11665	215	K-26
950-AS-02293	93	24	950-AS-10733	112	01	950-AS-11673	114	30
950-AS-02333	95	23	950-AS-10758	115	01	950-AS-11681	114	21
950-AS-02333	96	09	950-AS-10806	112	10	950-AS-11698	114	15
950-AS-02333	97	01	950-AS-10806	215	K-28	950-AS-11698	215	K-26
950-AS-02333	114		950-AS-10847	115	12	950-AS-11705	114	14
950-AS-02446	87	12	950-AS-10888	106	22	950-AS-11705	215	K-26
950-AS-02463	87	10	950-AS-10896	106	30	950-AS-11713	114	11
950-AS-02463	96	01	950-AS-10903	106	28	950-AS-11721	114	10
950-AS-02488	87	13	950-AS-10911	106	24	950-AS-11738	114	07
950-AS-02522	86	56	950-AS-10936	106	33	950-AS-11738	215	K-26
950-AS-02528	90	01	950-AS-10936	215	K-29	950-AS-11746	114	06
950-AS-02528	104		950-AS-10985	114	18	950-AS-11754	114	03
950-AS-02536	90	24	950-AS-10985	215	K-26	950-AS-11754	215	K-26
950-AS-02536	93	07	950-AS-10993	114	19	950-AS-11762	114	02
950-AS-02536	107		950-AS-10993	215	K-26	950-AS-11779	112	09
950-AS-02552	96	24	950-AS-11065	106	02	950-AS-11779	215	K-28
950-AS-02552	99	01	950-AS-11073	106	12	950-AS-11835	114	27
950-AS-02552	113		950-AS-11082	106	17	950-AS-11868	114	23
950-AS-02715	85	12	950-AS-11098	106	19	950-AS-11876	114	17
950-AS-05266	113	01	950-AS-11105	106	20	950-AS-11876	215	K-26
950-AS-10158	112	08	950-AS-11113	112	11	950-AS-11884	114	32
950-AS-10158	215	K-28	950-AS-11138	106	05	950-AS-12053	215	K-25
950-AS-10271	107	04	950-AS-11146	106	10	950-AS-12053	104	12
950-AS-10271	115	05	950-AS-11162	106	29	950-AS-12061	104	37
950-AS-10271	215	K-24	950-AS-11195	106	01	950-AS-12078	215	K-25
950-AS-10271	215	K-30	950-AS-11367	106	08	950-AS-12078	104	11
950-AS-10303	112	03	950-AS-11421	111	04	950-AS-12086	104	08
950-AS-10303	113	12	950-AS-11438	111	03	950-AS-12134	215	K-25
950-AS-10303	215	K-23	950-AS-11446	111	02	950-AS-12134	104	01
950-AS-10303	215	K-28	950-AS-11454	111	01	950-AS-12142	104	16
950-AS-10303	215	K-51	950-AS-11487	116	15	950-AS-12175	104	13
950-AS-10336	106	07	950-AS-11495	116	02	950-AS-12183	104	23

PARTNO	FIG	ITEM	PARTNO	FIG	ITEM	PARTNO	FIG	ITEM
950-AS-12191	215	K-25	950-AS-13099	112	17	950-AS-13463	96	31
950-AS-12191	104	24	950-AS-13099	115	14	950-AS-13463	118	09
950-AS-12207	215	K-25	950-AS-13106	113	06	950-AS-13488	90	35
950-AS-12207	104	25	950-AS-13106	215	K-23	950-AS-13496	95	20
950-AS-12215	104	27	950-AS-13122	104	31	950-AS-13511	87	11
950-AS-12223	215	K-25	950-AS-13122	114	05	950-AS-13511	88	17
950-AS-12223	104	26	950-AS-13147	111	06	950-AS-13511	89	12
950-AS-12248	215	K-25	950-AS-13155	104	35	950-AS-13511	90	16
950-AS-12248	104	21	950-AS-13163	104	32	950-AS-13511	91	09
950-AS-12256	104	20	950-AS-13163	104	36	950-AS-13511	92	11
950-AS-12264	104	28	950-AS-13163	114	04	950-AS-13511	215	K-33
950-AS-12289	215	K-25	950-AS-13228	85	20	950-AS-13544	106	32
950-AS-12289	104	30	950-AS-13228	86	37	950-AS-13544	215	K-29
950-AS-12297	215	K-25	950-AS-13228	88	05	950-AS-13577	107	02
950-AS-12297	104	04	950-AS-13228	89	16	950-AS-13577	114	20
950-AS-12312	215	K-25	950-AS-13228	91	14	950-AS-13577	215	K-24
950-AS-12312	104	17	950-AS-13228	94	10	950-AS-13577	215	K-26
950-AS-12345	111	05	950-AS-13228	98	09	950-AS-13585	107	13
950-AS-12353	104	40	950-AS-13228	215	K-33	950-AS-13617	85	15
950-AS-12361	104	34	950-AS-13252	107	11	950-AS-13617	87	20
950-AS-12386	104	41	950-AS-13252	112	16	950-AS-13617	90	38
950-AS-12401	104	05	950-AS-13252	115	16	950-AS-13617	91	20
950-AS-12418	104	03	950-AS-13269	87	32	950-AS-13617	92	17
950-AS-12426	104	19	950-AS-13269	89	05	950-AS-13617	93	17
950-AS-12434	104	14	950-AS-13269	90	26	950-AS-13617	95	01
950-AS-12442	113	05	950-AS-13269	91	04	950-AS-13617	96	22
950-AS-12459	107	09	950-AS-13269	92	08	950-AS-13617	97	04
950-AS-12459	215	K-24	950-AS-13269	93	13	950-AS-13617	118	02
950-AS-12467	107	05	950-AS-13277	87	16	950-AS-13633	90	41
950-AS-12475	107	06	950-AS-13277	88	22	950-AS-13633	91	23
950-AS-12475	215	K-24	950-AS-13277	89	07	950-AS-13633	92	14
950-AS-12491	107	03	950-AS-13277	90	09	950-AS-13633	95	08
950-AS-12491	115	04	950-AS-13277	91	08	950-AS-13641	118	20
950-AS-12491	215	K-24	950-AS-13277	92	06	950-AS-13658	115	02
950-AS-12493	107	01	950-AS-13277	93	04	950-AS-13666	87	21
950-AS-12597	107	10	950-AS-13277	94	06	950-AS-13666	97	10
950-AS-12604	107	08	950-AS-13277	95	03	950-AS-13666	118	06
950-AS-12629	113	03	950-AS-13277	97	15	950-AS-13739	114	31
950-AS-12629	215	K-23	950-AS-13277	118	11	950-AS-13788	86	53
950-AS-12637	113	14	950-AS-13277	215	K-34	950-AS-13788	96	23
950-AS-12645	113	16	950-AS-13293	113	15	950-AS-13788	97	23
950-AS-12661	113	09	950-AS-13293	215	K-23	950-AS-13796	85	08
950-AS-13041	112	12	950-AS-13366	114	01	950-AS-13796	86	35
950-AS-13066	112	02	950-AS-13374	90	05	950-AS-13796	87	05
950-AS-13066	113	11	950-AS-13414	97	07	950-AS-13796	118	04
950-AS-13066	215	K-28	950-AS-13414	118	12	950-AS-13796	215	K-35
950-AS-13074	112	15	950-AS-13455	104	33	950-AS-13803	87	35
950-AS-13074	115	15	950-AS-13463	93	22	950-AS-13803	91	22

PARTNO	FIG	ITEM	PARTNO	FIG	ITEM	PARTNO	FIG	ITEM
950-AS-13803	97	11	950-AS-14468	114	24	950-AS-15613	95	04
950-AS-13803	118	17	950-AS-14468	215	K-26	950-AS-15613	215	K-34
950-AS-13828	90	22	950-AS-14476	114	29	950-AS-15613	215	K-35
950-AS-13828	93	09	950-AS-14476	215	K-26	950-AS-15886	87	30
950-AS-13868	88	23	950-AS-14484	114	22	950-AS-20484	95	07
950-AS-13869	88	29	950-AS-14484	215	K-26	950-AS-21466	106	26
950-AS-13869	89	18	950-AS-14492	114	12	950-AS-22568	93	08
950-AS-13884	89	14	950-AS-14492	215	K-26	950-AS-23012	90	34
950-AS-13884	92	20	950-AS-14508	114	13	950-AS-23231	85	21
950-AS-13893	113	08	950-AS-14508	215	K-26	950-AS-23231	86	38
950-AS-13909	87	14	950-AS-14516	114	09	950-AS-23231	88	04
950-AS-13925	113	07	950-AS-14524	114	08	950-AS-23231	89	17
950-AS-13933	113	02	950-AS-14524	215	K-26	950-AS-23231	90	23
950-AS-13933	215	K-23	950-AS-14662	97	19	950-AS-23231	91	16
950-AS-13941	215	K-35	950-AS-14727	115	08	950-AS-23231	93	02
950-AS-13974	113	18	950-AS-14735	115	10	950-AS-23231	94	11
950-AS-14005	106	25	950-AS-14743	115	11	950-AS-23231	98	08
950-AS-14046	115	11	950-AS-14751	115	11	950-AS-23231	215	K-33
950-AS-14054	95	14	950-AS-15586	88	13	950-AS-23248	107	12
950-AS-14054	96	08	950-AS-15586	88	30	950-AS-23289	87	15
950-AS-14054	118	21	950-AS-15586	89	04	950-AS-23289	88	21
950-AS-14079	106	23	950-AS-15586	89	13	950-AS-23289	89	06
950-AS-14079	215	K-29	950-AS-15586	90	06	950-AS-23289	90	08
950-AS-14087	106	31	950-AS-15586	90	15	950-AS-23289	91	12
950-AS-14087	215	K-29	950-AS-15586	91	10	950-AS-23289	92	05
950-AS-14135	90	07	950-AS-15586	92	09	950-AS-23289	93	06
950-AS-14135	95	10	950-AS-15586	92	12	950-AS-23289	94	05
950-AS-14143	96	19	950-AS-15586	93	20	950-AS-23289	95	02
950-AS-14143	118	24	950-AS-15586	96	32	950-AS-23289	97	16
950-AS-14184	106	21	950-AS-15586	97	21	950-AS-23289	118	10
950-AS-14192	106	16	950-AS-15586	118	05	950-AS-23289	215	K-34
950-AS-14232	106	13	950-AS-15586	215	K-33	950-AS-23401	85	09
950-AS-14232	215	K-29	950-AS-15586	215	K-34	950-AS-23401	86	36
950-AS-14249	106	14	950-AS-15594	90	04	950-AS-23401	87	04
950-AS-14249	215	K-29	950-AS-15594	97	13	950-AS-23401	96	20
950-AS-14257	106	15	950-AS-15594	118	07	950-AS-23401	97	06
950-AS-14257	215	K-29	950-AS-15601	86	54	950-AS-23401	215	K-35
950-AS-14313	104	02	950-AS-15601	91	19	950-AS-23407	118	03
950-AS-14319	116	14	950-AS-15601	96	29	950-AS-23442	92	15
950-AS-14319	215	K-27	950-AS-15601	97	02	950-AS-23507	87	34
950-AS-14354	86	51	950-AS-15601	118	13	950-AS-23507	88	19
950-AS-14354	98	16	950-AS-15613	85	14	950-AS-23507	91	11
950-AS-14354	215	K-33	950-AS-15613	85	17	950-AS-23507	95	21
950-AS-14362	215	K-34	950-AS-15613	87	06	950-AS-23507	215	K-34
950-AS-14427	116	01	950-AS-15613	90	36	950-AS-23686	85	13
950-AS-14435	116	09	950-AS-15613	90	40	950-AS-23686	97	22
950-AS-14451	114	25	950-AS-15613	92	18	950-AS-23694	87	22
950-AS-14451	215	K-26	950-AS-15613	93	18	950-AS-23694	90	39

PARTNO	FIG	ITEM	PARTNO	FIG	ITEM	PARTNO	FIG	ITEM
950-AS-23694	93	03	950-AS-62169	215	K-25	950-AS-65522	95	05
950-AS-23694	95	06	950-AS-62169	104	18	950-AS-65522	96	28
950-AS-23694	97	18	950-AS-62233	215	K-25	950-AS-65522	97	08
950-AS-23694	118	15	950-AS-62233	104	22	950-AS-65522	118	14
950-AS-23844	87	23	950-AS-62274	215	K-25	950-AS-65522	215	K-34
950-AS-23844	96	30	950-AS-62274	104	29	950-AS-65522	215	K-35
950-AS-23844	97	09	950-AS-62339	90	42	950-AS-65603	87	29
950-AS-23844	118	16	950-AS-62339	95	09	950-AS-65603	88	18
950-AS-23844	215	K-35	950-AS-62339	96	27	950-AS-65603	89	15
950-AS-24153	93	23	950-AS-62339	97	14	950-AS-65603	90	17
950-AS-24163	96	18	950-AS-62339	118	08	950-AS-65603	92	13
950-AS-24163	118	22	950-AS-62793	215	K-25	950-AS-65603	93	21
950-AS-24211	106	06	950-AS-62793	104	39	950-AS-65628	91	13
950-AS-24577	91	17	950-AS-63027	113	04	950-AS-65628	96	33
950-AS-24577	215	K-33	950-AS-63384	106	04	950-AS-65628	97	20
950-AS-24609	87	17	950-AS-63384	215	K-29	950-AS-65628	118	19
950-AS-24609	88	20	950-AS-63473	115	09	950-AS-65628	215	K-34
950-AS-24609	89	08	950-AS-63473	215	K-30	950-AS-73055	112	04
950-AS-24609	90	10	950-AS-63562	107	07	950-AS-73055	113	13
950-AS-24609	91	07	950-AS-63562	215	K-24	950-AS-73055	215	K-23
950-AS-24609	92	07	950-AS-63595	106	09	950-AS-73055	215	K-28
950-AS-24609	93	05	950-AS-63595	112	05	950-AS-73055	215	K-51
950-AS-24609	94	07	950-AS-63595	115	06	950-AS-74959	93	01
950-AS-24609	95	11	950-AS-63595	215	K-28	950-AS-94809	116	19
950-AS-24609	97	17	950-AS-63595	215	K-29	950-AS-94809	215	K-23
950-AS-24609	118	18	950-AS-63595	215	K-30	950-AS-94809	215	K-24
950-AS-24609	215	K-34	950-AS-63602	112	07	950-AS-94809	215	K-25
950-AS-24617	85	22	950-AS-63602	115	07	950-AS-94809	215	K-26
950-AS-24617	86	39	950-AS-63602	215	K-28	950-AS-94809	215	K-27
950-AS-24617	88	06	950-AS-63602	215	K-30	950-AS-94809	215	K-28
950-AS-24617	89	19	950-AS-63602	215	K-51	950-AS-94809	215	K-29
950-AS-24617	91	15	950-AS-63749	106	11	950-AS-94809	215	K-30
950-AS-24617	94	12	950-AS-63749	215	K-29	950-AS-98409	215	K-51
950-AS-24617	98	07	950-AS-64201	106	03	950-FP-02034	185	23
950-AS-24617	215	K-33	950-AS-64201	215	K-29	950-FP-02067	185	46
950-AS-24763	113	17	950-AS-64426	106	18	950-FP-11106	185	25
950-AS-61156	106	27	950-AS-64426	215	K-29	950-FP-11114	185	24
950-AS-61156	215	K-29	950-AS-64648	116	12	950-FP-21086	185	41
950-AS-62096	215	K-25	950-AS-64648	215	K-27	950-FP-21139	185	39
950-AS-62096	104	09	950-AS-64656	116	10	950-FP-21191	185	40
950-AS-62103	215	K-25	950-AS-64656	215	K-27	950-FP-71039	185	22
950-AS-62103	104	10	950-AS-65522	85	18	950-FP-71120	185	19
950-AS-62111	215	K-25	950-AS-65522	86	55	950-SK-00035	112	
950-AS-62111	104	07	950-AS-65522	87	07	950-SK-00035	215	K-51
950-AS-62128	215	K-25	950-AS-65522	90	37	950-SK-00035	215	K-51
950-AS-62128	104	06	950-AS-65522	91	18	950-SK-00051	115	
950-AS-62152	215	K-25	950-AS-65522	92	19	950-SK-00051	215	K-30
950-AS-62152	104	15	950-AS-65522	93	19	950-SK-00051	215	K-30

PARTNO	FIG	ITEM	PARTNO	FIG	ITEM	PARTNO	FIG	ITEM
950-SK-00068	106		953-AL-01118	200	09	953-AL-03021	191	24
950-SK-00068	215	K-29	953-AL-01118	200	10	953-AL-11049	202	05
950-SK-00068	215	K-29	953-AL-01118	200	23	953-AL-11057	202	06
950-SK-00108	112		953-AL-01126	196	09	953-AL-12012	191	01
950-SK-00108	215	K-28	953-AL-01126	199	09	953-AL-12029	191	02
950-SK-00108	215	K-28	953-AL-01126	200	04	953-AL-12037	191	03
950-SK-00149	114		953-AL-01126	200	08	953-AL-12045	191	04
950-SK-00149	215	K-26	953-AL-01126	200	11	953-AL-12053	191	05
950-SK-00149	215	K-26	953-AL-01126	200	15	953-AL-12061	191	06
950-SK-00181	104		953-AL-01126	200	29	953-AL-12078	191	07
950-SK-00181	215	K-25	953-AL-01134	196	10	953-AL-12086	191	08
950-SK-00181	215	K-25	953-AL-01134	199	10	953-AL-12094	191	09
950-SK-00198	107		953-AL-01134	200	07	953-AL-12101	191	10
950-SK-00198	215	K-24	953-AL-01134	200	12	953-AL-12118	191	11
950-SK-00198	215	K-24	953-AL-01134	200	26	953-AL-12126	191	12
950-SK-00205	113		953-AL-01134	200	27	953-AL-12134	191	13
950-SK-00205	215	K-23	953-AL-01134	200	28	953-AL-12142	191	14
950-SK-00205	215	K-23	953-AL-01142	196	04	953-AL-12159	191	15
950-SK-00254	116		953-AL-01142	200	22	953-AL-12167	191	17
950-SK-00254	215	K-27	953-AL-01142	200	25	953-AL-12175	191	18
950-SK-00254	215	K-27	953-AL-01159	196	11	953-AL-12183	191	19
951-DZ-21042	207	23	953-AL-01159	200	19	953-AL-12191	191	20
953 CO 02029	11	21	953-AL-01167	194	03	953-AL-12207	191	21
953 RC 17106	11	18	953-AL-01167	200	32	953-AL-12215	191	22
953-AC-02285	206	53	953-AL-01175	199	12	953-AL-12223	191	25
953-AC-02293	206	54	953-AL-01175	200	03	953-AL-12231	191	26
953-AC-02309	206	56	953-AL-01175	200	16	953-AL-12248	191	27
953-AC-02317	206	19	953-AL-01183	196	05	953-AL-12256	191	28
953-AC-11349	206	33	953-AL-01183	200	21	953-AL-12264	191	29
953-AC-12264	206	01	953-AL-01191	194	10	953-AL-12272	191	30
953-AC-61204	206	23	953-AL-01191	199	11	953-AS-02028	86	07
953-AC-62258	206	03	953-AL-01191	200	02	953-AS-02028	86	48
953-AC-72286	206	55	953-AL-01191	200	17	953-AS-02036	86	40
953-AL-01061	194	04	953-AL-01191	200	30	953-AS-02069	86	41
953-AL-01061	199	06	953-AL-01215	199	03	953-AS-02077	86	49
953-AL-01061	200	06	953-AL-01215	200	01	953-AS-02085	86	52
953-AL-01061	200	13	953-AL-01215	200	18	953-AS-02085	99	02
953-AL-01061	200	31	953-AL-01231	195	11	953-AS-02093	86	01
953-AL-01086	194	09	953-AL-01361	202	02	953-AS-02117	86	03
953-AL-01086	196	08	953-AL-01378	199	16	953-AS-02174	86	02
953-AL-01086	200	24	953-AL-01378	200	05	953-AS-02174	117	
953-AL-01086	200	35	953-AL-01386	199	01	953-AS-03008	117	02
953-AL-01094	194	07	953-AL-01386	200	14	953-AS-03024	117	09
953-AL-01094	196	06	953-AL-01394	194	01	953-AS-03032	117	10
953-AL-01094	200	20	953-AL-01394	200	33	953-AS-03057	117	13
953-AL-01094	200	34	953-AL-02017	191		953-AS-03065	117	05
953-AL-01118	196	07	953-AL-03005	191	16	953-AS-03073	117	07
953-AL-01118	199	05	953-AL-03013	191	23	953-AS-03081	117	08

PARTNO	FIG	ITEM	PARTNO	FIG	ITEM	PARTNO	FIG	ITEM
953-AS-03098	20	13	953-BD-01122	180	38	953-DZ-71316	207	21
953-AS-11019	86	05	953-BD-01155	180	03a	953-DZ-71365	207	18
953-AS-11027	86	04	953-BD-01163	180	11	953-DZ-71373	207	19
953-AS-11035	86	06	953-BD-01171	180	03b	953-DZ-71381	207	20
953-AS-11051	86	18	953-BD-01188	181		953-DZ-71421	13	68
953-AS-12089	86	09	953-BD-02054	181	01	953-DZB-0148	207	
953-AS-12097	117	01	953-BD-02079	181	02	953-DZB-0164	207	
953-AS-12112	117	04	953-BD-10032	180	37	953-EC-02016	03	01
953-AS-12129	117	06	953-BD-10049	180	39	953-EC-02024	03	02
953-AS-12137	117	12	953-BD-10057	180	40	953-EC-02243	02	
953-AS-12145	117	14	953-BD-11029	180	05	953-EC-02243	03	
953-AS-12153	117	15	953-BD-11159	180	06	953-EC-02268	03	17
953-AS-16788	86	50	953-BD-11167	180	07	953-EC-02276	03	18
953-AS-62106	117	03	953-BD-11183	182	03	953-EC-03004	02	10
953-AS-71731	103	08	953-BD-61128	180	08	953-EC-12158	02	03
953-AS-74618	103	06	953-BP-02054	74		953-EG-01047	13	
953-AS-76874	103	24	953-BP-03026	70	52	953-EG-01088	14	
953-AS-76882	103	12	953-BR-42066	71	13	953-EG-01152	14	
953-AS-76899	103	33	953-BR-42074	71	19	953-EG-01339	15	
953-AS-76906	103	05	953-BR-42082	71	31	953-EG-01347	13	
953-AS-76914	103	04	953-CO-02012	14	22	953-EG-01363	12	
953-AS-76917	103	44	953-CO-02029	14	55	953-EG-01363	17	
953-AS-76955	103	42	953-CO-02045	14	57	953-EG-01371	13	
953-AS-76963	103	43	953-CO-02053	14	03	953-EG-01411	18	
953-ASB-6775	86	19	953-CO-03161	14	75	953-EG-02254	12	18
(* 953-AX-42007)	70	01	953-CO-11082	14	20	953-EG-02254	16	16
953-AX-01004	68		953-DA-01004	01		953-EG-02254	17	13
953-AX-01004	73	01	953-DA-01004	26	05	953-EG-02262	12	17
953-AX-01037	66		953-DA-02009	01	24	953-EG-02262	16	17
953-AX-02009	68	01	953-DZ-00016	207		953-EG-02262	17	14
953-AX-02009	70		953-DZ-01023	208		953-EG-02295	15	07
953-AX-02017	68	04	953-DZ-21403	207	01	953-EG-02432	15	06
953-AX-02017	72		953-DZ-71121	207	02	953-EG-02473	15	05
953-AX-02025	68	02	953-DZ-71138	207	03	953-EG-02521	13	65
953-AX-02025	69	01	953-DZ-71146	207	04	953-EG-02521	17	01
953-AX-02043	68	03	953-DZ-71154	207	05	953-EG-02534	16	18
953-AX-02058	68	05	953-DZ-71162	207	06	953-EG-02534	17	15
953-AX-03013	72	04	953-DZ-71179	207	07	953-EG-02538	13	62
953-AX-11024	66	07	953-DZ-71187	207	08	953-EG-02538	14	01
953-AX-11219	73	11	953-DZ-71219	207	09	953-EG-02538	17	05
953-AX-11227	73	02	953-DZ-71227	207	10	953-EG-02542	16	19
953-AX-12029	72	01	953-DZ-71235	207	11	953-EG-02542	17	16
953-AX-52019	70	42	953-DZ-71243	207	12	953-EG-02546	17	04
953-BD-00012	180		953-DZ-71251	207	13	953-EG-02554	13	61
953-BD-01009	180	01	953-DZ-71268	207	14	953-EG-02554	17	07
953-BD-01074	180	02	953-DZ-71276	207	15	953-EG-02562	13	60
953-BD-01082	180	03	953-DZ-71284	207	16	953-EG-02562	17	02
953-BD-01099	182		953-DZ-71292	207	17	953-EG-02602	20	02

PARTNO	FIG	ITEM	PARTNO	FIG	ITEM	PARTNO	FIG	ITEM
953-EG-02619	20	03	953-EG-81732	18	03	953-FG-01024	30	01
953-EG-02627	20	04	953-EG-81749	18	07	953-FG-01049	145	
953-EG-02635	20	05	953-EG-82201	11	53	953-FG-01073	142	01
953-EG-02643	20	06	953-EG-82201	20	20	953-FG-01081	144	
953-EG-02651	20	07	953-EG-82259	11	49	953-FG-02045	144	03
953-EG-02668	20	08	953-EG-82267	14	76	953-FG-02053	144	04
953-EG-02676	20	09	953-EG-82648	11	55	953-FG-02134	145	01
953-EG-02692	13	11	953-EG-82729	11	57	953-FG-02142	145	02
953-EG-02732	86	08	953-EG-82737	11	58	953-FG-02159	145	07
953-EG-02732	117	11	953-EGB-0058	20	01	953-FG-02167	145	13
953-EG-02757	12	05	953-EGB-0074	18	01	953-FG-02191	143	01
953-EG-02765	12	04	953-EX-01458	08	01	953-FG-12154	144	17
953-EG-02773	12	06	953-EX-01466	08	02	953-FG-12462	145	09
953-EG02781	12	20	953-EX-01474	08	04	953-FG-12479	145	11
953-EG-02781	17	29	953-EX-01506	08	11	953-FG-12502	145	08
953-EG-02846	13	46	953-EX-01514	08	12	953-FL-00023	146	
953-EG-02984	20	10	953-EX-01522	08	19	953-FL-00033	05	
953-EG-02992	20	11	953-EX-02179	08	24	953-FL-02001	07	04
953-EG-03015	11	30	953-EX-02227	08	15	953-FL-02026	07	01
953-EG-03072	13	17	953-EX-02243	08	14	953-FL-11017	05	54
953-EG-03259	17	31	953-EX-02251	08	26	953-FL-61027	05	55
953-EG-11107	14	36	953-EX-02268	08	20	953-FP-02029	185	82
953-EG-11245	13	54	953-EX-02276	08	33	953-HC-00012	156	
953-EG-11301	19	02	953-EX-02284	08	32	953-HC-00012	215	K-14
953-EG-11318	19	03	953-EX-10027	08	03	953-HC-00012	215	K-14
953-EG-11626	13	64	953-EX-13462	08	13	953-HC-00029	161	
953-EG-11772	11	47	953-EX-13908	08	27	953-HC-00029	215	K-13
953-EG-11772	13	13	953-EX-73362	08	05	953-HC-00029	215	K-13
953-EG-11772	207	24	953-EX-73727	08	10	953-HC-01009	126	49
953-EG-11812	14	27	953-FE-01002	138	03	953-HC-01009	161	
953-EG-11812	17	08	953-FE-01019	137	03	953-HC-01009	167	69
953-EG-11812	139	34	953-FE-01027	137	04	953-HC-01017	156	
953-EG-16823	18	11	953-FE-01043	137	06	953-HC-01017	169	01
953-EG-17074	207	25	953-FE-01043	138	10	953-HC-02005	161	01
953-EG-61474	12	16	953-FE-01051	137	08	953-HC-02021	156	01
953-EG-71007	11	17	953-FE-01051	138	13	953-HC02038	156	02
953-EG-71031	17	18	953-FE-01059	138	12	953-HC-02046	156	03
953-EG-71081	13	59	953-FE-01092	138	02	953-HC-11256	156	35
953-EG-71437	13	58	953-FE-01108	138	01	953-HC-11264	156	37
953-EG-71437	138	47	953-FE-01116	137	05	953-HC-51068	156	05
953-EG-72652	11	50	953-FE-01116	138	09	953-HC-91293	156	20
953-EG-81198	14	74	953-FE-02007	137	01	953-HC-91293	215	K-14
953-EG-81327	13	19	953-FE-02015	137	02	953-HM-01003	162	
953-EG-81327	139	20	953-FE-02207	144	02	953-HM-01003	163	
953-EG-81692	18	02	953-FE-11088	138	04	953-HM-01003	171	01
953-EG-81708	18	05	953-FG-00011	142		953-HM-02008	162	01
953-EG-81716	18	04	953-FG-00028	143		953-HM-51005	163	04
953-EG-81724	18	06	953-FG-01016	143	02	953-HP-00048	138	

PARTNO	FIG	ITEM	PARTNO	FIG	ITEM	PARTNO	FIG	ITEM
953-HP-00064	147		953-HS-02251	171	66	953-HS-03053	153	42
953-HP-01003	138	08	953-HS-02251	215	K-56	953-HS-03079	153	28
953-HP-01052	138	17	953-HS-02276	171	15	953-HS-03094	167	28
953-HP-01075	138	16	953-HS-02276	215	K-56	953-HS-03094	168	24
953-HP-01166	138	11	953-HS-02292	172	46	953-HS-03101	172	25
953-HP-01166	141		953-HS-02308	172	71	953-HS-03118	38	38
953-HP-01174	138	14	953-HS-02316	172	72	953-HS-03118	171	22
953-HP-01182	138	36	953-HS-02324	172	73	953-HS-03126	167	43
953-HP-01206	138	15	953-HS-02373	172	69	953-HS-03134	167	93
953-HP-02073	141	03	953-HS-02381	172	15	953-HS-03134	215	K-57
953-HP-02121	141	17	953-HS-02381	215	K-54	953-HS-03142	172	83
953-HP-02268	147	01	953-HS-02398	172	66	953-HS-03142	215	K-54
953-HP-02276	141	01	953-HS-02405	172	60	953-HS-03175	60	46
953-HP-02284	141	02	953-HS-02413	172	56	953-HS-03183	171	12
953-HP-02308	141	08	953-HS-02421	172	29	953-HS-03183	172	04
953-HP-02316	141	09	953-HS-02438	172	30	953-HS-03248	215	K-57
953-HP-02332	138	06	953-HS-02446	172	37	953-HS-11015	160	01
953-HP-02349	138	07	953-HS-02454	172	38	953-HS-11015	153	19
953-HP-13421	147	02	953-HS-02462	172	40	953-HS-11023	157	01
953-HP-13543	141	05	953-HS-02487	172	85	953-HS-11023	153	45
953-HP-13551	141	04	953-HS-02487	215	K-54	953-HS-11048	171	51
953-HP-13835	138	55	953-HS-02551	167	39	953-HS-11194	171	21
953-HP-13843	138	56	953-HS-02551	215	K-57	953-HS-11494	169	08
953-HP-61122	138	28	953-HS-02568	167	42	953-HS-11859	172	07
953-HP-63894	144	14	953-HS-02576	167	47	953-HS-12052	167	27
953-HP-73727	138	39	953-HS-02592	167	44	953-HS-12125	171	73
953-HS-00046	160		953-HS-02592	215	K-57	953-HS-12247	168	36
953-HS-01036	165		953-HS-02608	167	55	953-HS-12303	171	55
953-HS-01037	167		953-HS-02608	215	K-57	953-HS-12328	171	72
953-HS-01044	169		953-HS-02657	215	K-48	953-HS-12377	167	77
953-HS-01077	168		953-HS-02665	171	79	953-HS-12377	171	40
953-HS-02016	128		953-HS-02681	168	39	953-HS-12433	128	01
953-HS-02016	167	70	953-HS-02681	215	K-48	953-HS-12441	128	04
953-HS-02024	167	20	953-HS-02698	168	42	953-HS-12514	172	75
953-HS-02057	167	29	953-HS-02698	215	K-48	953-HS-12522	172	51
953-HS-02057	168	23	953-HS-02705	168	11	953-HS-12539	172	67
953-HS-02058	153	18	953-HS-02713	168	21	953-HS-12693	167	90
953-HS-02058	160		953-HS-02762	167	88	953-HS-12936	167	104
953-HS-02065	171	23	953-HS-02787	167	89	953-HS-61058	153	20
953-HS-02073	157		953-HS-02802	171	34	953-HS-62979	160	03
953-HS-02073	153	44	953-HS-02827	171	60	953-HS-62979	215	K-16
953-HS-02098	164		953-HS-02835	172	53	953-HS-62987	160	04
953-HS-02098	168	31	953-HS-02843	172	32	953-HS-62987	215	K-16
953-HS-02139	172	70	953-HS-02908	172	52	953-HS-63001	160	05
953-HS-02195	171	62	953-HS-02916	172	68	953-HS-63001	215	K-16
953-HS-02202	171	71	953-HS-03012	154		953-HS-63034	160	06
953-HS-02219	171	54	953-HS-03012	155		953-HS-63034	215	K-16
953-HS-02235	167	94	953-HS-03012	153	23	953-HSB-0039	147	16

PARTNO	FIG	ITEM	PARTNO	FIG	ITEM	PARTNO	FIG	ITEM
953-HSB-0047	215	K-46	953-OC-02156	60	01	953-PH-02171	167	08
953-HSB-0055	168		953-OC-02164	60	52	953-PH-02188	167	06
953-HSB-0063	168		953-OC-02172	60	23	953-PH-02196	167	11
953-HSB-0063	215	K-47	953-OC-02189	60	24	953-PH-02203	168	01
953-HSB-0063	215	K-47	953-OC-02197	60	53	953-PH-02203	171	13
953-HSB-0071	168		953-OC-02204	60	54	953-PH-02236	167	49
953-HSB-0071	215	K-48	953-OC-02212	60	47	953-PH-02252	167	26
953-HSB-0071	215	K-48	953-OC-02212	215	K-61	953-PH-02252	215	K-57
953-HSB-0088	167		953-OC-02229	60	60	953-PH-02406	167	12
953-HSB-0241	215	K-52	953-OC-02334	60	30	953-PH-02422	167	99
953-HSB-0241	215	K-46	953-OC-02342	60	65	953-PH-02439	171	31
953-HSB-0241	215	K-52	953-OC-11082	57	39	953-PH-02439	215	K-56
953-HSB-0258	172		953-OC-11082	215	K-18	953-PH-02471	215	K-57
953-HSB-0258	215	K-53	953-OC-11399	60	22	953-PH-02488	173	06
953-HSB-0258	215	K-53	953-OC-11414	60	51	953-PH-02496	173	12
953-HSB-0266	172		953-OC-11414	215	K-61	953-PH-02503	173	03
953-HSB-0266	215	K-54	953-OC-11439	60	50	953-PH-02511	173	04
953-HSB-0266	215	K-54	953-OC-11439	215	K-61	953-PH-02528	173	05
953-HSB-0274	172		953-OC-11447	60	48	953-PH-02536	173	13
953-HSB-0282	171		953-OCB-0024	59		953-PH-02869	173	02
953-HSB-0282	215	K-55	953-OCB-0024	215	K-49	953-PH-03005	153	01
953-HSB-0282	215	K-55	953-OCB-0024	215	K-49	953-PH-03013	153	02
953-HSB-0299	171		953-OCB-0032	59		953-PH-03021	153	03
953-HSB-0299	215	K-56	953-OCB-0032	215	K-50	953-PH-03046	153	61
953-HSB-0299	215	K-56	953-OCB-0032	215	K-50	953-PH-03054	153	54
953-HSB-0306	171		953-OCB-0049	215	K-61	953-PH-03087	153	39
953-HSB-0388	167		953-OCB-0049	215	K-61	953-PH-03095	168	02
953-HSB-0388	215	K-57	953-OCB-0073	215	K-59	953-PH-03151	172	23
953-HSB-0388	215	K-57	953-OCB-0073	215	K-59	953-PH-03184	171	26
953-HSB-0452	167		953-OCB-0081	215	K-60	953-PH-03192	171	25
953-HSB-0452	215	K-58	953-OCB-0081	215	K-60	953-PH-03208	215	K-57
953-HSB-0452	215	K-58	953-PD-00013	26		953-PH-11146	160	02
953-IP-03022	139	27	953-PD-01026	27		953-PH-11187	153	29
953-MF-00012	134	01	953-PD-01067	29		953-PH-12272	173	07
953-MF-01083	171	92	953-PD-02039	29		953-PH-12289	173	14
953-MF-31637	20	35	953-PD-02103	29	02	953-PH-62363	173	22
953-OC-00017	56		953-PH-01012	171		953-PH-62371	173	08
953-OC-00017	58		953-PH-01029	172		953-PI-01015	26	04
953-OC-00017	59		953-PH-01086	173		953-PI-01031	73	05
953-OC-00017	60		953-PH-02025	167	67	953-PI-01048	73	07
953-OC-01021	58	12	953-PH-02066	153		953-PI-01048	134	10
953-OC-01021	59	10	953-PH-02099	171	20	953-PI-01056	26	
953-OC-01038	58	11	953-PH-02106	171	18	953-PI-01056	26	01
953-OC-01054	56		953-PH-02114	171	43	953-PI-01064	26	03
953-OC-01054	57		953-PH-02122	171	42	953-PI-01064	27	
953-OC-01054	215	K-18	953-PH-02147	172	76	953-PI-02003	73	03
953-OC-01054	215	K-18	953-PH-02155	172	84	953-PI-02003	136	02
953-OC-02042	60	15	953-PH-02163	172	02	953-PI-02003	136	13

PARTNO	FIG	ITEM	PARTNO	FIG	ITEM	PARTNO	FIG	ITEM
953-PI-02033	135	11	953-SK-00012	157		953-SU-02009	136	01
953-PI-10014	28	08	953-SK-00021	128		953-SU-02017	136	12
953-PI-10088	28	07	953-SK-00038	128	10	953-SU-02025	135	01
953-PI-10163	27	03	953-SK-00046	153		953-SU-02033	135	10
953-PI-11027	27	02	953-SK-00046	215	K-16	953-SU-02041	136	23
953-PI-11035	29	01	953-SK-00046	215	K-16	953-SU-02058	135	27
953-PI-11084	27	01	953-SK-00079	86	20	953-SU-02058	136	29
953-PI-11116	29	03	953-SK-00079	117		953-SU-02066	136	22
953-PI-11411	27	04	953-SK-00087	60	49	953-SU-02074	135	21
953-PT-02025	56	14	953-SK-00087	215	K-61	953-SU-02082	135	20
953-PT-02033	57	14	953-SS-00019	126		953-SU-11146	135	17
953-RA-01005	04	01	953-SS-01007	126	03	953-SU-11146	136	19
953-RA-01021	04	23	953-SS-01015	126	08	953-SU-11515	135	14
953-RA-01054	04	17	953-SS-01023	126	27	953-SU-11515	136	16
953-RC-02089	138	05	953-SS-01031	126	40	953-SU-21125	135	02
953-RC-02201	139	07	953-SS-01089	126	41	953-SU-21125	136	04
953-RC-02218	139		953-SS-01104	127		953-SU-21133	135	13
953-RC-03077	139	01	953-SS-02044	167	80	953-SU-21133	136	15
953-RC-03085	139	02	953-SS-02085	126	33	953-SU-61091	135	24
953-RC-03093	139	03	953-SS-11302	126	16	953-SU-61091	136	26
953-RC-03104	139	22	953-SS-11319	126	11	953-SU-91118	135	06
953-RC-03125	139	25	953-SS-11368	126	24	953-SU-91118	136	08
953-RC-03141	139	29	953-SS-11376	126	26	953-SU-91118	215	K-1
953-RC-03539	139	16	953-SS-11384	126	20	953-SU-91159	135	04
953-RC-17074	11	15	953-SS-11392	126	17	953-SU-91159	136	06
953-RC-17114	11	19	953-SS-11408	126	39	953-SU-91159	215	K-1
953-RC-17114	20	17	953-SS-11416	126	36	953-SU-91167	135	05
953-RC-17471	13	69	953-SS-11424	126	47	953-SU-91167	136	07
953-RC-62012	206	09	953-SS-11432	126	47	953-SU-91167	215	K-1
953-RC-62029	206	08	953-SS-11449	126	47	953-SU-91191	135	07
953-RC-67132	138	37	953-SS-11457	126	47	953-SU-91191	136	09
953-RC-67213	139	39	953-SS-11473	126	30	953-SU-91191	215	K-1
953-RC-67287	139	26	953-SS-11538	126	42	953-SU-91207	135	03
953-RC-67319	139	40	953-SS-11627	127	03	953-SU-91207	136	05
953-RC-67343	139	43	953-SS-11635	127	04	953-SU-91207	215	K-1
953-RC-67392	139	18	953-SS-31115	126	01	953-TC-01006	32	
953-RC-67416	139	06	953-SS-31123	126	02	953-TC-01006	33	
953-RC-67424	139	11	953-SS-31131	126	15	953-TC-01006	34	
953-RC-67432	139	08	953-SS-31148	126	23	953-TC-01006	35	
953-RC-67449	139	55	953-SS-31156	126	05	953-TC-01006	36	
953-RG-01038	04	26	953-SU-00016	135		953-TC-01006	37	
953-RG-01046	04	21	953-SU-00016	136		953-TC-52029	34	47
953-RG-01054	04	18	953-SU-00016	215	K-1	953-TI-02043	209	26
953-RG-01062	04	24	953-SU-00016	215	K-1	953-TM-02013	26	02
953-RG-01079	04	30	953-SU-01004	73	13	953-TM-02013	31	
953-RG-10012	04	37	953-SU-01004	136		953-TM-02013	38	
953-RG-10029	04	36	953-SU-01012	66	01	953-TM-02013	39	
953-RG-10037	04	35	953-SU-01012	135		953-TM-02013	40	

PARTNO	FIG	ITEM	PARTNO	FIG	ITEM	PARTNO	FIG	ITEM
953-TM-02013	41		953-TMB-0011	50		953-ZZ-00123	215	K-10
953-TM-02013	42		953-TMB-0011	51		953-ZZ-00123	215	K-11
953-TM-02013	43		953-TMB-0011	52		953-ZZ-00131	34	
953-TM-02013	44		953-TMB-0011	53		953-ZZ-00131	215	K-12
953-TM-02013	45		953-TMB-0011	54		953-ZZ-00131	215	K-9
953-TM-02013	46		953-WT-01009	77	10	953-ZZ-00131	215	K-12
953-TM-02054	43	01	953-WT-01017	77		953-ZZ-00148	38	
953-TM-11037	43	03	953-WT-01041	78		953-ZZ-00148	215	K-4
953-TM-11045	41	23	953-WT-01231	76		953-ZZ-00148	215	K-9
953-TM-11078	42	28	953-WT-02005	76	01	953-ZZ-00156	215	K-2
953-TM-11078	43	24	953-WT-02005	76		953-ZZ-00156	215	K-10
953-TM-11101	44	28	953-WT-02005	77	01	953-ZZ-00164	36	
953-TM-32016	42	01	953-WT-02005	77		953-ZZ-00164	215	K-3
953-TM-32032	42	10	953-WT-02013	76	02	953-ZZ-00164	215	K-9
953-TM-43098	44	30	953-WT-02013	77	02	953-ZZ-11572	180	32
953-TM-43113	38	01	953-WT-02021	78	01	955-AC-02151	206	07
953-TM-43179	38	11	953-WT-10008	77	11	955-AC-02321	206	
953-TM-54057	44	24	953-WT-11045	76	04	955-AC-11791	206	39
953-TM-54098	43	09	953-WT-11045	77	04	955-AC-11807	206	38
953-TM-54113	42	24	953-WT-11094	78	03	955-AC-11823	206	35
953-TM-54113	43	20	953-ZZ-00026	50		955-AC-11831	206	36
953-TM-54138	42	20	953-ZZ-00026	215	K-2	955-AC-11848	206	31
953-TM-54138	43	16	953-ZZ-00042	215	K-3	955-AC-11945	206	40
953-TM-54179	43	14	953-ZZ-00042	215	K-9	955-AC-11953	206	30
953-TM-54195	41	01	953-ZZ-00059	50		955-AC-11961	206	37
953-TM-54219	41	20	953-ZZ-00059	215	K-4	955-AC-61639	206	44
953-TM-54235	41	05	953-ZZ-00067	37		955-AC-61647	206	48
953-TM-96031	42	23	953-ZZ-00067	215	K-5	955-AC-61858	206	32
953-TM-96031	43	19	953-ZZ-00067	215	K-5	955-AC-61866	206	47
953-TM-96048	43	07	953-ZZ-00067	215	K-9	955-AC-61874	206	46
953-TMB-0011	32		953-ZZ-00075	50		955-AC-61922	206	50
953-TMB-0011	33		953-ZZ-00075	215	K-6	955-AC-61939	206	49
953-TMB-0011	34		953-ZZ-00075	215	K-6	955-AC-81573	206	34
953-TMB-0011	35		953-ZZ-00075	215	K-10	955-AC-81743	206	29
953-TMB-0011	36		953-ZZ-00083	40		955-AC-81979	206	45
953-TMB-0011	37		953-ZZ-00083	215	K-7	955-CC-02106	139	24
953-TMB-0011	38		953-ZZ-00083	215	K-7	955-CC-02114	139	32
953-TMB-0011	39		953-ZZ-00083	215	K-10	955-CC-02211	139	23
953-TMB-0011	40		953-ZZ-00091	215	K-8	955-CC-63627	138	40
953-TMB-0011	41		953-ZZ-00091	215	K-8	955-CC-63635	138	41
953-TMB-0011	42		953-ZZ-00091	215	K-10	955-CC-74562	139	41
953-TMB-0011	43		953-ZZ-00107	34		955-CC-92511	139	17
953-TMB-0011	44		953-ZZ-00107	215	K-9	955-EF-11096	186	03
953-TMB-0011	45		953-ZZ-00115	38		955-EG-02112	13	15
953-TMB-0011	46		953-ZZ-00115	215	K-10	955-EG-02697	19	01
953-TMB-0011	47		953-ZZ-00115	215	K-10	955-EG-04138	11	59
953-TMB-0011	48		953-ZZ-00123	38		955-EG-04187	11	56
953-TMB-0011	49		953-ZZ-00123	215	K-11	955-EG-11274	13	32

PARTNO	FIG	ITEM	PARTNO	FIG	ITEM	PARTNO	FIG	ITEM
955-EG-11274	15	23	985-AL-11126	192	7	985-AL-12358	215	K-38
955-EG-11274	20	21	985-AL-11126	197	02	985-AL-12366	201	02
955-EG-11299	13	21	985-AL-11134	197	17	985-AL-12366	215	K-36
955-EG-11477	13	34	985-AL-11142	197	18	985-AL-12382	201	04
955-EG-11696	13	22	985-AL-11159	197	13	985-AL-12399	201	05
955-EG-11777	13	02	985-AL-11167	193	01	985-AL-12399	215	K-36
955-EG-22111	11	16	985-AL-11167	195	8	985-AL-12406	201	06
955-EG-22111	207	26	985-AL-11175	198	13	985-AL-12414	201	07
955-EG-72113	14	47	985-AL-11183	197	07	985-AL-12414	215	K-36
955-EG-82514	19	11	985-AL-11183	192	5	985-AL-12422	201	08
955-EG-82522	19	09	985-AL-11191	192	20	985-AL-12422	215	K-36
955-EG-82539	19	12	985-AL-11191	202	01	985-AL-12430	215	K-36
955-EG-82709	13	67	985-AL-11207	192	16	985-AL-12439	201	09
955-EGB-0119	19		985-AL-11215	197	23	985-AL-12447	201	10
955-HS-02086	173	15	985-AL-11223	197	22	985-AL-12447	215	K-36
955-HS-11214	167	16	985-AL-11231	198	04	985-AL-12455	201	11
955-OS-02009	140	01	985-AL-11256	193	02	985-AL-12455	215	K-36
955-RC-11051	15	28	985-AL-11256	194	06	985-AL-12503	201	16
955-ZZ-01383	171	27	985-AL-11256	196	01	985-AL-12503	215	K-36
955-ZZ-10383	153	60	985-AL-11256	198	09	985-AL-12511	201	17
955-ZZ-10383	172	80	985-AL-11256	199	04	985-AL-12528	201	18
985 AS 02608	100	13	985-AL-11329	194	08	985-AL-12536	201	19
985 AS 02698	93	16	985-AL-11329	195	5	985-AL-12544	201	20
985-AC-71756	206	28	985-AL-11329	196	03	985-AL-12552	215	K-36
985-AL-02021	192	2	985-AL-11329	199	07	985-AL-61517	215	K-38
985-AL-02021	195	1	985-AL-11337	198	05	985-AL-61587	203	10
985-AL-02021	202	03	985-AL-11337	199	13	985-AL-61587	215	K-37
985-AL-02046	192	3	985-AL-11345	198	06	985-AL-61606	203	12
985-AL-02046	197	10	985-AL-11353	197	09	985-AL-61606	215	K-37
985-AL-02095	203		985-AL-11361	197	27	985-AL-61606	215	K-38
985-AL-02102	198	01	985-AL-11401	198	11	985-AL-61615	203	13
985-AL-02119	198	02	985-AL-11597	203	11	985-AL-61615	215	K-37
985-AL-02127	198	03	985-AL-11597	215	K-37	985-AL-61622	215	K-38
985-AL-02135	190	01	985-AL-11629	203	14	985-AL-61647	203	16
985-AL-02143	190	07	985-AL-11637	203	15	985-AL-61647	215	K-37
985-AL-02151	190	06	985-AL-11637	215	K-38	985-AL-61647	215	K-38
985-AL-02151	197	24	985-AL-11653	203	17	985-AL-61696	203	21
985-AL-02208	197	03	985-AL-11661	203	18	985-AL-61716	203	23
985-AL-02216	192	8	985-AL-11678	203	19	985-AL-61716	215	K-37
985-AL-02224	192	9	985-AL-11686	203	20	985-AL-62108	215	K-38
985-AL-02224	197	01	985-AL-11686	215	K-37	985-AL-62376	201	03
985-AL-03252	203	09	985-AL-11686	215	K-38	985-AL-62376	215	K-36
985-AL-03261	201		985-AL-11694	215	K-38	985-AL-62498	201	15
985-AL-11037	192	4	985-AL-11701	203	22	985-AL-62498	215	K-36
985-AL-11037	195	10	985-AL-11718	203	24	985-AL-71148	192	14
985-AL-11037	197	08	985-AL-11815	215	K-38	985-AL-71294	197	11
985-AL-11045	192	1	985-AL-12041	215	K-38	985-AL-71318	197	20
985-AL-11045	195	9	985-AL-12358	201	01	985-AL-71415	203	01

PARTNO	FIG	ITEM	PARTNO	FIG	ITEM	PARTNO	FIG	ITEM
985-AL-71423	203	02	985-AS-02705	90	21	985-AS-13876	89	01
985-AL-71431	203	03	985-AS-02705	92	02	985-AS-13876	91	01
985-AL-71442	203	04	985-AS-02713	92	21	985-AS-13884	90	14
985-AL-71459	203	05	985-AS-02721	102	23	985-AS-13884	91	24
985-AL-71467	203	06	985-AS-02721	110		985-AS-13892	94	13
985-AL-71475	203	07	985-AS-03037	85	19	985-AS-13892	98	06
985-AL-71483	203	08	985-AS-03167	108	01	985-AS-13908	98	10
985-AL-71529	215	K-38	985-AS-03167	109	01	985-AS-13916	94	01
985-AL-72096	215	K-38	985-AS-03175	108	02	985-AS-13924	94	02
985-AL-72274	215	K-38	985-AS-03183	108	21	985-AS-13932	88	25
985-AL-72469	201	12	985-AS-03183	215	K-21	985-AS-13932	89	09
985-AL-72469	215	K-36	985-AS-03191	108	27	985-AS-13932	90	18
985-AL-72477	201	13	985-AS-03207	109	02	985-AS-13932	91	06
985-AL-72477	215	K-36	985-AS-03215	109	14	985-AS-13932	92	03
985-AL-72485	201	14	985-AS-03223	109	14	985-AS-13932	93	15
985-AL-72485	215	K-36	985-AS-03231	109	21	985-AS-13949	87	03
985-AL-74026	194	05	985-AS-03248	105	02	985-AS-13949	87	36
985-AS-02049	101	23	985-AS-03256	105	03	985-AS-13957	102	06
985-AS-02073	88	01	985-AS-03264	105	15	985-AS-13957	102	12
985-AS-02085	20	34	985-AS-03272	105	28	985-AS-13957	102	14
985-AS-02085	96	02	985-AS-03297	110	12	985-AS-13957	102	19
985-AS-02093	90	11	985-AS-04041	100	12	985-AS-13965	100	33
985-AS-02105	102	22	985-AS-04058	100	11	985-AS-13965	102	20
985-AS-02113	102	29	985-AS-04114	85	30a	985-AS-13981	102	09
985-AS-02119	85	03	985-AS-11048	87	24	985-AS-13981	102	13
985-AS-02121	100	02	985-AS-11056	88	10	985-AS-13998	87	02
985-AS-02121	102	02	985-AS-11064	88	07	985-AS-14045	100	27
985-AS-02138	101	05	985-AS-11072	88	08	985-AS-14045	101	18
985-AS-02162	87	01	985-AS-11526	100	17	985-AS-14045	102	10
985-AS-02187	102	38	985-AS-11526	101	08	985-AS-14045	102	17
985-AS-02243	100	32	985-AS-12077	96	17	985-AS-14053	100	28
985-AS-02251	100	10	985-AS-12077	118	23	985-AS-14053	101	19
985-AS-02535	85	23	985-AS-12109	93	10	985-AS-14053	102	08
985-AS-02535	100	14	985-AS-12117	90	29	985-AS-14061	102	16
985-AS-02535	101	02	985-AS-12522	86	46	985-AS-14078	100	29
985-AS-02551	85	04	985-AS-12628	86	10	985-AS-14101	100	30
985-AS-02576	100	01	985-AS-12741	86	12	985-AS-14118	85	02
985-AS-02584	102	26	985-AS-12766	86	47	985-AS-15277	108	04
985-AS-02608	101	01	985-AS-12839	87	08	985-AS-15277	109	05
985-AS-02608	108		985-AS-13788	85	10	985-AS-15285	108	05
985-AS-02616	109		985-AS-13796	96	21	985-AS-15293	108	06
985-AS-02624	92	01	985-AS-13796	97	05	985-AS-15293	215	K-21
985-AS-02624	105		985-AS-13803	92	24	985-AS-15317	108	08
985-AS-02632	85	01	985-AS-13843	87	33	985-AS-15325	108	09
985-AS-02698	88	24	985-AS-13868	92	04	985-AS-15325	215	K-21
985-AS-02698	89	10	985-AS-13868	93	14	985-AS-15333	108	10
985-AS-02698	90	25	985-AS-13868	94	08	985-AS-15341	108	11
985-AS-02705	89	11	985-AS-13876	88	14	985-AS-15341	215	K-21

PARTNO	FIG	ITEM	PARTNO	FIG	ITEM	PARTNO	FIG	ITEM
985-AS-15358	108	12	985-AS-15803	105	17	985-AS-65579	109	17
985-AS-15366	108	13	985-AS-15828	105	19	985-AS-65579	215	K-20
985-AS-15399	108	16	985-AS-15836	105	20	985-AS-65587	109	18
985-AS-15399	109	09	985-AS-15844	105	21	985-AS-65587	215	K-20
985-AS-15406	108	17	985-AS-15852	105	22	985-AS-65627	109	25
985-AS-15406	109	10	985-AS-15869	105	23	985-AS-65716	105	08
985-AS-15414	108	18	985-AS-15877	105	24	985-AS-65765	105	13
985-AS-15414	109	11	985-AS-15885	105	25	985-AS-65895	105	26
985-AS-15422	108	19	985-AS-15917	105	28	985-AS-65902	105	27
985-AS-15422	109	12	985-AS-15925	105	29	985-AS-66761	110	09
985-AS-15439	108	20	985-AS-15933	105	30	985-AS-66786	110	13
985-AS-15439	109	13	985-AS-15941	105	31	985-AS-66794	110	16
985-AS-15447	108	22	985-AS-16557	95	19	985-AS-66801	110	17
985-AS-15447	215	K-21	985-AS-16605	110	03	985-AS-71108	05	41
985-AS-15455	108	23	985-AS-16613	110	05	985-AS-71507	103	40
985-AS-15455	215	K-21	985-AS-16621	110	06	985-AS-72788	103	01
985-AS-15463	108	24	985-AS-16646	110	08	985-AS-72803	103	25
985-AS-15471	108	25	985-AS-16662	110	10	985-AS-73703	85	11
985-AS-15488	108	26	985-AS-16669	110	11	985-AS-73793	98	15
985-AS-15496	108	28	985-AS-16695	110	14	985-AS-73979	05	39
985-AS-15496	109	22	985-AS-16702	110	15	985-AS-74083	05	40
985-AS-15503	108	29	985-AS-23507	92	10	985-AS-74083	167	95
985-AS-15503	109	23	985-AS-36589	110	01	985-AS-74634	103	02
985-AS-15511	109	03	985-AS-36597	110	02	985-AS-74642	103	03
985-AS-15511	215	K-20	985-AS-63715	215	K-22	985-AS-74659	103	09
985-AS-15528	109	06	985-AS-64039	12	10	985-AS-74667	103	07
985-AS-15569	109	16	985-AS-64039	15	14	985-AS-74683	103	10
985-AS-15569	215	K-20	985-AS-64039	16	13	985-AS-74691	103	11
985-AS-15593	109	19	985-AS-64039	100	24	985-AS-74715	103	13
985-AS-15609	109	20	985-AS-64039	101	15	985-AS-74723	103	14
985-AS-15617	109	24	985-AS-64096	102	39	985-AS-74748	103	16
985-AS-15617	215	K-20	985-AS-64136	91	27	985-AS-74756	103	17
985-AS-15633	100	31	985-AS-64136	101	22	985-AS-74764	103	18
985-AS-15633	109	26	985-AS-65262	108	03	985-AS-74772	103	19
985-AS-15641	105	01	985-AS-65262	109	04	985-AS-74789	103	20
985-AS-15658	105	02	985-AS-65262	215	K-20	985-AS-74804	103	22
985-AS-15666	105	03	985-AS-65262	215	K-21	985-AS-74845	103	27
985-AS-15674	105	04	985-AS-65302	108	07	985-AS-74853	103	28
985-AS-15682	105	05	985-AS-65376	108	14	985-AS-74861	103	29
985-AS-15699	105	06	985-AS-65376	215	K-21	985-AS-74878	103	30
985-AS-15706	105	07	985-AS-65384	108	15	985-AS-74886	103	31
985-AS-15722	105	09	985-AS-65384	215	K-21	985-AS-74972	103	15
985-AS-15739	105	10	985-AS-65538	109	07	985-AS-74975	103	21
985-AS-15747	105	11	985-AS-65538	215	K-20	985-AS-75014	103	39
985-AS-15755	105	12	985-AS-65546	109	08	985-AS-75014	103	41
985-AS-15771	105	14	985-AS-65546	215	K-20	985-AS-75047	103	37
985-AS-15788	105	15	985-AS-65554	109	15	985-AS-75088	103	38
985-AS-15796	105	16	985-AS-65554	215	K-20	985-AS-75096	103	36

PARTNO	FIG	ITEM	PARTNO	FIG	ITEM	PARTNO	FIG	ITEM
985-AS-75817	105	18	985-AX-15055	72	51	985-AX-55207	72	29
985-AX-00507	70		985-AX-15144	72	17	985-AX-55272	72	43
985-AX-00507	215	K-42	985-AX-15144	215	K-43	985-AX-55289	66	22
985-AX-00507	215	K-42	985-AX-15152	72	19	985-AX-55289	72	49
985-AX-00515	72		985-AX-15193	72	30	985-AX-55523	70	15
985-AX-00515	215	K-43	985-AX-15299	72	48	985-AX-55556	70	21
985-AX-00515	215	K-43	985-AX-15306	66	23	985-AX-55589	70	16
985-AX-02054	66	04	985-AX-15306	72	50	(* 985-AX-56463)	70	07
985-AX-02054	67		985-AX-15347	72	33	(* 985-AX-56488)	70	06
985-AX-02062	66	09	985-AX-15363	72	11	985-AX-63072	67	07
985-AX-03001	67		985-AX-15371	72	14	985-AX-63072	215	K-19
985-AX-03001	215	K-44	985-AX-15371	215	K-43	985-AX-63072	215	K-44
985-AX-03001	215	K-44	(* 985-AX-15388)	72	12	985-AX-65324	72	35
985-AX-03018	67		(* 985-AX-15396)	72	12	985-AX-65324	215	K-43
985-AX-03018	215	K-19	(* 985-AX-15403)	72	12	985-AX-65332	72	44
985-AX-03018	215	K-19	985-AX-15444	70	26	985-AX-65332	215	K-43
985-AX-03529	72	40	985-AX-15452	70	32	985-AX-65487	70	47
985-AX-03618	72	12	985-AX-15566	70	20	985-AX-65487	215	K-42
985-AX-03618	215	K-43	985-AX-15566	70	23	985-AX-73108	67	10
985-AX-03675	70	06	985-AX-15599	70	17	985-AX-73108	215	K-19
985-AX-04517	70	16	985-AX-15614	70	45	985-AX-73108	215	K-44
985-AX-12211	66	03	985-AX-15655	70	12	985-AX-73132	67	13
985-AX-12228	66	10	985-AX-15971	70	13	985-AX-73132	215	K-19
985-AX-12236	66	11	985-AX-16068	70	27	985-AX-73132	215	K-44
985-AX-12285	66	21	985-AX-16602	70	43	985-AX-95319	72	26
985-AX-13013	67	01	985-AX-16619	70	33	985-AX-95424	72	05
985-AX-13021	67	02	985-AX-16627	70	34	985-AX-95432	72	09
985-AX-13038	67	03	985-AX-16627	215	K-42	985-AX-95513	66	06
985-AX-13046	67	04	985-AX-16643	70	38	985-AX-95513	70	30
985-AX-13054	67	05	985-AX-16651	70	38	985-AX-95602	70	19
985-AX-13062	67	06	985-AX-19227	70	18	985-AX-95724	70	24
985-AX-13062	215	K-44	985-AX-25415	72	15	985-AXB-9052	70	01
985-AX-13087	67	08	985-AX-25578	70	22	985-AXB-9069	70	08
985-AX-13087	215	K-44	985-AX-32195	66	02	985-AXB-9077	70	38
985-AX-13095	67	09	985-AX-33912	66	17	985-AXB-9077	215	K-42
985-AX-13095	215	K-19	985-AX-45017	72	10	985-BD-02026	180	10
985-AX-13095	215	K-44	985-AX-45041	72	22	985-BD-02059	180	12
985-AX-13119	67	11	985-AX-45358	72	02	985-BD-02067	180	13
985-AX-13127	67	12	985-AX-45706	70	25	985-BD-02301	180	04
985-AX-13127	215	K-19	(* 985-AX-45714)	70	02	985-BD-11033	73	08
985-AX-13127	215	K-44	(* 985-AX-46549)	70	08	985-BD-11033	126	46
985-AX-13143	67	14	985-AX-46565	70	29	985-BD-11033	134	12
985-AX-13151	67	15	985-AX-46581	70	35	985-BD-11033	180	16
985-AX-13921	66	13	(* 985-AX-46638)	70	09	985-BD-11041	180	17
985-AX-13938	66	14	985-AX-55037	72	16	985-BD-11058	180	18
985-AX-13946	66	14	985-AX-55167	72	28	985-BD-11066	180	19
985-AX-13954	66	14	985-AX-55175	72	25	985-BD-11074	180	20
985-AX-13962	66	24	985-AX-55183	72	18	985-BD-12484	182	01

PARTNO	FIG	ITEM	PARTNO	FIG	ITEM	PARTNO	FIG	ITEM
985-BP-02034	74	02	985-BR-03522	71	26	985-CV-01072	52	01
985-BP-02042	74	03	985-BR-03539	71	32	985-CV-01072	53	
985-BP-02042	75		985-BR-03547	71	33	985-CV-01258	48	01
985-BP-11536	74	07	985-BR-15105	71	04	985-CV-02003	36	21
985-BP-11593	74	04	985-BR-15121	71	14	985-CV-02044	48	19
985-BP-13018	75	01	985-BR-15219	71	12	985-CV-02052	47	36
985-BP-13026	75	02	985-BR-15251	71	03	985-CV-02069	47	37
985-BP-13034	75	03	(* 985-BR-45035)	71	32	985-CV-02077	49	22
985-BP-13034	215	K-32	985-BR-42058	71	01	985-CV-02077	50	01
985-BP-13042	75	04	985-BR-45181	71	28	985-CV-02085	48	05
985-BP-13059	75	05	985-BR-45205	71	08	985-CV-02093	47	06
985-BP-13059	215	K-32	(* 985-BR-65018)	71	33	985-CV-02125	36	01
985-BP-13067	75	06	985-BR-65026	71	26	985-CV-02133	47	10
985-BP-13075	75	07	985-BR-65091	71	29	985-CV-02141	47	18
985-BP-13075	215	K-32	985-BR-65148	71	16	985-CV-02166	49	01
985-BP-13107	75	10	985-BR-65148	71	22	985-CV-02182	52	04
985-BP-13107	215	K-32	985-BR-65164	71	09	985-CV-03024	50	25
985-BP-13115	75	11	985-BR-65237	71	07	985-CV-03032	50	21
985-BP-13115	215	K-32	985-BR-95134	71	25	985-CV-11027	37	03
985-BP-13123	75	12	985-BR-95159	71	27	985-CV-11035	37	04
985-BP-13123	215	K-32	985-BR-95223	71	10	985-CV-11043	37	08
985-BP-13131	75	13	985-BR-95248	71	11	985-CV-11051	37	05
985-BP-13131	215	K-32	985-CO-02066	12	14	985-CV-11068	35	21
985-BP-13156	75	15	985-CO-02139	14	32	985-CV-11071	35	23
985-BP-13156	215	K-32	985-CO-02228	14	21	985-CV-11084	35	24
985-BP-13164	75	16	985-CO-02228	17	30	985-CV-11092	35	10
985-BP-13172	75	17	985-CO-02269	14	31	985-CV-11108	35	08
985-BP-13189	75	18	985-CO-02309	14	56	985-CV-11116	35	27
985-BP-13189	215	K-32	985-CO-02374	14	04	985-CV-11124	35	14
985-BP-13197	75	19	985-CO-02406	14	06	985-CV-11149	35	04
985-BP-13204	75	20	985-CO-02463	14	05	985-CV-11157	35	13
985-BP-13212	75	21	985-CO-03163	14	35	985-CV-11165	35	20
985-BP-13229	75	22	985-CO-03176	14	30	985-CV-11173	35	30
985-BP-13237	75	23	985-CO-11024	14	65	985-CV-11181	35	17
985-BP-13245	75	24	985-CV-01007	32	56	985-CV-11198	35	19
985-BP-13253	75	25	985-CV-01007	37	01	985-CV-11205	35	11
985-BP-13261	75	26	985-CV-01015	32	27	985-CV-11213	35	28
985-BP-13261	215	K-32	985-CV-01015	35	01	985-CV-11221	36	22
985-BP-43081	75	09	985-CV-01023	32	43	985-CV-11238	36	06
985-BP-73089	75	08	985-CV-01023	36	01	985-CV-11246	36	09
985-BP-73089	215	K-32	985-CV-01031	40		985-CV-11254	36	10
985-BP-73145	75	14	985-CV-01048	39	14	985-CV-11260	48	24
985-BP-73145	215	K-32	985-CV-01048	153	10	985-CV-11262	36	08
985-BP-91492	74	01	985-CV-01072	47	01	985-CV-11281	36	13
985-BR-01068	71		985-CV-01072	48	01	985-CV-11327	36	04
985-BR-02518	71	35	985-CV-01072	49	01	985-CV-11343	40	05
985-BR-02526	71	25	985-CV-01072	50	01	985-CV-11351	40	04
985-BR-02534	71	32	985-CV-01072	51	01	985-CV-11368	40	03

PARTNO	FIG	ITEM	PARTNO	FIG	ITEM	PARTNO	FIG	ITEM
985-CV-11392	39	15	985-CV-42545	48	29	985-EC-91868	02	07
985-CV-11408	39	16	985-CV-42561	48	32	985-EG-02023	12	22
985-CV-11984	49	15	985-CV-42561	48	34	985-EG-02494	12	21
985-CV-11992	48	15	985-CV-62093	50	08	985-EG-02526	12	19
985-CV-12218	50	15	985-CV-62106	50	19	985-EG-02526	17	28
985-CV-12226	50	16	985-CV-62122	50	20	985-EG-02567	15	08
985-CV-12275	50	03	985-CV-72118	50	22	985-EG-02956	17	17
985-CV-12283	50	05	985-CV-72118	215	K-8	985-EG-03433	17	03
985-CV-12291	47	02	985-CV-72207	50	26	985-EG-03441	17	06
985-CV-12307	48	07	985-CV-72207	215	K-8	985-EG-11088	11	04
985-CV-12356	49	26	985-CV-92263	50	11	985-EG-11128	11	05
985-CV-12389	52	01	985-CV-92863	53	06	985-EG-11152	14	46
985-CV-12429	48	08	985-DA-02021	01	18	985-EG-11152	14	69
985-CV-12437	49	13	985-DA-02021	215	K-45	985-EG-11177	14	49
985-CV-12445	48	14	985-DA-02038	01	11	985-EG-11266	13	28
985-CV-12453	49	05	985-DA-02046	01	14	985-EG-11299	13	35
985-CV-12461	48	04	985-DA-02046	215	K-45	985-EG-11306	14	26
985-CV-12478	49	03	985-DA-11078	01	04	985-EG-11696	14	48
985-CV-12486	47	20	985-DA-11086	01	32	985-EG-11963	13	48
985-CV-12534	47		985-DA-31044	01	17	985-EG-12246	14	07
985-CV-12583	48	31	985-DA-41031	01	12	985-EG-66599	12	13
985-CV-12591	48	30	985-DA-41056	01	01	985-EG-72324	11	24
985-CV-12623	48	20	985-DA-41064	01	03	985-EG-72324	15	11
985-CV-12631	49	17	985-DA-51019	01	10	985-EG-72332	15	10
985-CV-12648	48	16	985-DA-61096	01	02	985-EG-72349	15	18
985-CV-12656	48	18	985-DZ-21335	90	27	985-EG-81745	15	24
985-CV-12664	48	13	985-DZ-21335	207	27	985-EG-81834	13	33
985-CV-12672	49	11	985-DZ-21343	90	28	985-EG-81883	11	51
985-CV-12689	48	12	985-DZ-21343	207	28	985-EG-81883	17	23
985-CV-12697	48	17	985-DZ-21351	90	32	985-EG-81891	17	22
985-CV-12704	47	03	985-DZ-21351	207	29	985-EG-81912	17	21
985-CV-12712	47	04	985-DZ-21384	139	48	985-EG-82296	11	25
985-CV-12729	47	05	985-EC-02029	04	10	985-EG-82296	20	19
985-CV-12883	50	09	985-EC-02037	04	11	985-EG-86621	14	50
985-CV-21388	39	14	985-EC-02175	04	02	985-EI-02029	26	05
985-CV-22838	53	01	985-EC-02297	04	04	985-EI-02029	26	14
985-CV-41013	37	01	985-EC-02454	03	03	985-EI-02037	26	11
985-CV-41135	35	01	985-EC-03017	02	02	985-EI-02061	26	01
985-CV-41273	36		985-EC-03025	02	01	985-EI-11011	26	17
985-CV-41298	36	11	985-EC-11028	04	16	985-EI-11028	26	08
985-CV-41305	36	14	985-EC-11125	03	21	985-FL-02006	05	01
985-CV-41379	40	01	985-EC-11133	03	20	985-FL-02006	07	
985-CV-42026	49	23	985-EC-11133	31	15	985-FL-02014	05	16
985-CV-42131	50	01	985-EC-12049	04	03	985-FL-02103	05	05
985-CV-42367	48	01	985-EC-12421	03	19	985-FL-02111	05	15
985-CV-42383	47		985-EC-41396	02	06	985-FL-02185	05	21
985-CV-42407	49	01	985-EC-62067	02	04	985-FL-02193	05	27
985-CV-42497	47	01	985-EC-91413	02	12	985-FL-03084	06	03

PARTNO	FIG	ITEM	PARTNO	FIG	ITEM	PARTNO	FIG	ITEM
985-FL-11079	05	31	985-FP-11251	185	58	985-HM-91032	163	14
985-FL-11402	05	12	985-FP-11276	185	62	985-HM-91057	54	08
985-FL-11565	05	30	985-FP-11284	185	37	985-HM-91057	162	21
985-FL-18272	05	42	985-FP-11551	185	42	985-HM-91057	163	08
985-FL-61046	05	17	985-FP-11568	185	38	985-HP-02061	147	06
985-FL-61087	05	18	985-FP-21158	185	20	985-HP-02175	146	01
985-FP-02067	185	45	985-FP-21158	207	30	985-HP-02353	04	14
985-FP-02122	185	81	985-FP-21166	185	21	985-HP-02548	147	04
985-FP-02123	185	02	985-FP-21166	207	31	985-HP-11028	138	57
985-FP-02147	185	80	985-HC-61076	161	04	985-HP-11141	125	09
985-FP-02155	185	78	985-HC-61076	215	K-13	985-HP-11158	125	06
985-FP-02171	185	74	985-HM-01008	60	27	985-HP-11247	04	15
985-FP-02188	185	75	985-HM-01016	54		985-HP-11303	125	11
985-FP-02382	185	47	985-HM-01016	172	11	985-HP-61168	125	10
985-FP-02414	185	79	985-HM-01028	170		985-HS-02045	57	07
985-FP-02422	185	76	985-HM-02004	54	01	985-HS-02053	55	
985-FP-02439	185	77	985-HM-02012	54	03	985-HS-02053	57	01
985-FP-02447	186	01	985-HM-02012	162	16	985-HS-02061	57	02
985-FP-02455	186	02	985-HM-02029	162	02	985-HS-02353	167	17
985-FP-02463	185	13	985-HM-03009	162	14	985-HS-02865	172	33
985-FP-02471	185	14	985-HM-03017	163	01	985-HS-03017	55	01
985-FP-02496	185	17	985-HM-03025	163	03	985-HS-03058	55	06
985-FP-02503	185	18	985-HM-11085	54	12	985-HS-03058	215	K-18
985-FP-02511	185	32	985-HM-11093	54	11	985-HS-03066	55	08
985-FP-02528	185	33	985-HM-11109	54	15	985-HS-03066	215	K-18
985-FP-02536	185	34	985-HM-11109	163	15	985-HS-11011	153	32
985-FP-02544	185	35	985-HM-11352	162	10	985-HS-11044	57	10
985-FP-02585	185	60	985-HM-11369	162	08	985-HS-11288	55	02
985-FP-02593	185	72	985-HM-21004	54	06	985-HS-11296	55	10
985-FP-02609	185	68	985-HM-21064	162	19	985-HS-11303	55	09
985-FP-02617	185	73	985-HM-21064	163	06	985-HS-11385	55	05
985-FP-02625	185	69	985-HM-21112	54	02	985-HS-11611	57	38
985-FP-02658	185	64	985-HM-21112	163	02	985-HS-11611	215	K-18
985-FP-02666	185	63	985-HM-21178	162	15	985-HS-11628	57	37
985-FP-02763	185	36	985-HM-51123	54	04	985-HS-11628	215	K-18
985-FP-02771	185	03	985-HM-51131	54	05	985-HS-11644	56	21
985-FP-02788	185	16	985-HM-51131	163	05	985-HS-11644	57	40
985-FP-02796	185	15	985-HM-51189	162	17	985-MF-03437	172	82
985-FP-02811	185	04	985-HM-51197	162	18	985-MF-11018	134	04
985-FP-02828	185	01	985-HM-51237	162	03	985-MF-11018	169	02
985-FP-11032	185	48	985-HM-61046	54	09	985-MF-11026	134	05
985-FP-11058	185	27	985-HM-61046	162	22	985-MF-11026	169	03
985-FP-11179	185	26	985-HM-61046	163	09	985-MF-11034	134	02
985-FP-11202	185	44	985-HM-61079	54	07	985-PH-02243	171	49
985-FP-11219	185	49	985-HM-61079	162	20	985-PH-02379	171	56
985-FP-11227	185	55	985-HM-61079	163	07	985-PH-02427	172	36
985-FP-11235	185	56	985-HM-61249	162	04	985-PH-02427	215	K-54
985-FP-11243	185	57	985-HM-91032	54	14	985-PH-02468	171	05

PARTNO	FIG	ITEM	PARTNO	FIG	ITEM	PARTNO	FIG	ITEM
985-PH-02524	153	06	985-PT-02216	57	23	985-SK-01517	201	
985-PH-02573	172	06	985-PT-02224	59	36	985-SK-01517	215	K-36
985-PH-02581	172	05	985-PT-02224	60	37	985-SK-01517	215	K-36
985-PH-02605	172	77	985-PT-02638	59	01	985-SK-01574	108	
985-PH-02687	159		985-PT-02662	60	25	985-SK-01574	215	K-21
985-PH-02687	167	56	985-PT-11012	58	33	985-SK-01574	215	K-21
985-PH-02725	172	20	985-PT-11029	58	27	985-SK-01582	109	
985-PH-02873	167	58	985-PT-11029	60	31	985-SK-01582	215	K-20
985-PH-02905	167	68	985-PT-11037	58	20	985-SK-01582	215	K-20
985-PH-02913	167	66	985-PT-11045	59	30	985-SK-01599	105	
985-PH-02938	167	65	985-PT-11053	57	31	985-SK-01639	01	
985-PH-03034	159	03	985-PT-11061	59	24	985-SK-01639	215	K-45
985-PH-11012	171	88	985-PT-11086	56	05	985-SK-01639	215	K-45
985-PH-11029	172	81	985-PT-11086	60	11	985-SS-02098	125	04
985-PH-11037	171	85	985-PT-11094	59	20	985-SS-02121	168	12
985-PH-11053	172	47	985-PT-11503	60	62	985-SS-02179	15	32
985-PH-11061	172	44	985-PZ-11207	30	02	985-SS-02179	171	09
985-PH-11101	171	33	985-PZ-11215	30	05	985-SS-02219	15	04
985-PH-11126	171	90	985-RC-02141	139	12	985-SS-02219	168	07
985-PH-11134	171	69	985-RC-02158	139	13	985-SS-03175	15	38
985-PH-11175	172	42	985-SK-01014	98		985-SS-03175	168	13
985-PH-11183	172	57	985-SK-01014	215	K-33	985-SS-03183	15	37
985-PH-11191	171	52	985-SK-01014	215	K-33	985-SS-03183	168	14
985-PH-11256	167	91	985-SK-01022	98		985-SS-03191	15	36
985-PH-11289	172	54	985-SK-01022	215	K-34	985-SS-03215	15	02
985-PH-11426	172	58	985-SK-01022	215	K-34	985-SS-03223	15	01
985-PH-13013	159	01	985-SK-01039	98		985-SS-11104	126	19
985-PH-13021	159	05	985-SK-01039	215	K-35	985-SS-11145	126	28
985-PH-13038	159	02	985-SK-01039	215	K-35	985-SS-11186	126	43
985-PH-13046	159	04	985-SK-01047	75		985-SS-11348	125	14
985-PH-13054	159	07	985-SK-01047	215	K-32	985-SS-13146	125	17
985-PH-13062	159	10	985-SK-01047	215	K-32	985-SS-13162	127	02
985-PH-13079	159	06	985-SK-01051	75		985-TC-02015	51	05
985-PI-03012	31	01	985-SK-01217	203		985-TC-02023	33	32
985-PI-03029	31	09	985-SK-01217	215	K-37	985-TC-02031	34	19
985-PI-03037	31	09	985-SK-01217	215	K-37	985-TC-02048	34	24
985-PI-03061	31	08	985-SK-01428	165		985-TC-02056	32	
985-PI-11023	31	04	985-SK-01428	215	K-40	985-TC-02064	32	19
985-PI-11031	31	05	985-SK-01428	215	K-40	985-TC-02082	34	05
985-PI-11048	31	05	985-SK-01436	110		985-TC-02099	34	41
985-PI-11056	31	14	985-SK-01436	215	K-22	985-TC-11071	34	16
985-PI-11072	31	18	985-SK-01436	215	K-22	985-TC-11185	34	06
985-PI-11089	31	21	985-SK-01444	154		985-TC-11217	34	38
985-PI-61017	31	03	985-SK-01444	155		985-TC-11241	33	03
985-PI-61017	31	13	985-SK-01444	215	K-15	985-TC-11258	33	16
985-PI-61203	31	02	985-SK-01444	215	K-15	985-TC-11322	33	37
985-PT-02192	58	01	985-SK-01485	215	K-38	985-TC-11339	33	36
985-PT-02208	59	16	985-SK-01485	215	K-38	985-TC-11371	34	22

PARTNO	FIG	ITEM	PARTNO	FIG	ITEM	PARTNO	FIG	ITEM
985-TC-11396	32	47	985-TI-02031	209	20	985-TM-02034	39	01
985-TC-11469	34	21	985-TI-02048	209	01	985-TM-02059	39	34
985-TC-11533	34	48	985-TI-02056	209	13	985-TM-02067	40	13
985-TC-11582	34	42	985-TI-02064	209	02	985-TM-02075	39	02
985-TC-11606	32	28	985-TI-02072	209	12	985-TM-02083	46	16
985-TC-11671	33	33	985-TI-02089	215	K-41	985-TM-02123	46	
985-TC-11711	51	01	985-TI-02089	215	K-41	985-TM-02131	51	07
985-TC-21083	34	30	985-TI-03011	215	K-41	985-TM-02156	39	24
985-TC-21204	34	23	985-TI-03028	215	K-41	985-TM-02164	39	25
985-TC-21472	34	30A	985-TI-03036	215	K-41	985-TM-02172	39	26
985-TC-21497	34	32	985-TI-11103	209	19	985-TM-02189	39	24
985-TC-21707	32	61	985-TI-11111	209	09	985-TM-11009	44	38
985-TC-31484	34	05	985-TI-11128	209	08	985-TM-11017	42	03
985-TC-41017	34	07	985-TI-11193	209	13a	985-TM-11155	41	13
985-TC-41025	34	09	985-TI-11209	209	13b	985-TM-11325	45	30
985-TC-41196	34	18	985-TI-11217	209	13c	985-TM-11382	39	28
985-TC-41228	32	14	985-TI-11225	209	13d	985-TM-11496	41	15
985-TC-41236	33	06	985-TI-11233	209	13e	985-TM-11503	44	40
985-TC-41358	34	08	985-TI-11241	209	13f	985-TM-11511	44	37
985-TC-41552	34	25	985-TI-11258	209	13g	985-TM-11528	45	29
985-TC-41593	32	19	985-TI-11266	209	13h	985-TM-11536	44	43
985-TC-41617	32	01	985-TI-11274	209	02a	985-TM-11544	38	03
985-TC-41633	33	24	985-TI-11282	209	02b	985-TM-11755	39	11
985-TC-41641	33	23	985-TI-11299	209	02c	985-TM-11763	39	36
985-TC-51101	33	01	985-TI-11306	209	03	985-TM-11869	41	25
985-TC-51118	33	11	985-TI-11314	209	05	985-TM-11974	46	04
985-TC-51312	33	35	985-TI-11322	209	06	985-TM-11982	45	15
985-TC-51345	34	10	985-TI-11339	209	12a	985-TM-12046	44	14
985-TC-51459	34	20	985-TI-11347	209	12b	985-TM-12054	44	08
985-TC-51507	34	34	985-TI-11363	209	12d	985-TM-12176	45	23
985-TC-51515	34	01	985-TI-11371	209	12e	985-TM-12184	42	16
985-TC-51548	34	24	985-TI-11388	209	12f	985-TM-12184	43	12
985-TC-51572	34	41	985-TI-11396	209	16	985-TM-12249	44	26
985-TC-51629	33	28	985-TI-11444	209	18b	985-TM-12298	40	15
985-TC-51653	33	12	985-TI-11452	215	K-41	985-TM-12338	45	21
985-TC-61065	32	22	985-TI-11741	209	12c	985-TM-12346	44	03
985-TC-61065	215	K-12	985-TI-61462	215	K-41	985-TM-12346	45	32
985-TC-71093	34	44	985-TI-61479	215	K-41	985-TM-12354	42	17
985-TC-71263	33	17	985-TI-61487	215	K-41	985-TM-12354	43	13
985-TC-71263	215	K-12	985-TK-02037	14	62	985-TM-12379	44	41
985-TC-91002	34	12	985-TK-02037	153	40	985-TM-12492	39	06
985-TC-91051	33	13	985-TK-02053	153	41	985-TM-12557	42	08
985-TC-91279	33	02	985-TK-02224	153	48	985-TM-12565	38	02
985-TC-91368	34	15	985-TK-10534	55	07	985-TM-12573	38	04
985-TC-91562	34	28	985-TK-10542	153	14	985-TM-12581	46	19
985-TC-91668	32	52	985-TM-02001	39	05	985-TM-12598	45	02
985-TC-91935	32	13	985-TM-02018	40	21	985-TM-12654	41	08
985-TI-01002	209	21	985-TM-02026	39	07	985-TM-12679	46	09

PARTNO	FIG	ITEM	PARTNO	FIG	ITEM	PARTNO	FIG	ITEM
985-TM-12702	45	03	985-TM-61027	44	31	985-TM-92691	42	05
985-TM-12768	40	14	985-TM-61027	44	35	985-TM-92723	41	26
985-TM-12792	51	09	985-TM-61027	45	25	985-TM-92723	44	45
985-TM-12808	51	10	985-TM-61027	215	K-11	985-TM-92723	45	04
985-TM-12816	51	11	985-TM-61035	41	11	985-TM-92748	46	21
985-TM-21086	45	08	985-TM-61035	215	K-11	985-TM-92756	46	27
985-TM-21101	45	16	985-TM-61068	44	33	985-TM-96015	43	02
985-TM-22309	46	05	985-TM-61068	45	27	985-TM-96023	44	27
985-TM-22682	44	46	985-TM-61068	215	K-11	985-UJ-11051	28	01
985-TM-31932	44	01	985-TM-61076	46	28	985-UJ-11068	28	02
985-TM-31949	45	07	985-TM-61076	215	K-11	985-WC-02045	166	02
985-TM-41441	45	26	985-TM-61092	38	12	985-WC-02053	166	03
985-TM-41458	44	34	985-TM-61092	38	21	985-WC-02061	165	26
985-TM-41466	44	32	985-TM-61092	215	K-11	985-WC-02078	166	09
985-TM-41474	41	16	985-TM-61116	42	21	985-WC-02086	165	01
985-TM-41952	45	19	985-TM-61116	43	15	985-WC-02126	165	31
985-TM-42195	41	09	985-TM-61116	215	K-11	985-WC-02142	165	16
985-TM-42202	45	24	985-TM-61124	42	19	985-WC-02159	165	41
985-TM-42219	44	29	985-TM-61124	43	18	985-WC-02175	165	24
985-TM-42251	46	01	985-TM-61124	215	K-11	985-WC-02207	165	05
985-TM-42268	46	20	985-TM-61132	42	22	985-WC-02215	165	19
985-TM-42365	44	22	985-TM-61132	43	17	985-WC-02223	165	29
985-TM-42446	46	13	985-TM-61132	215	K-11	985-WC-11011	165	08
985-TM-42665	46	10	985-TM-62437	41	10	985-WC-11028	165	09
985-TM-51842	45	01	985-TM-62437	215	K-11	985-WC-11036	165	11
985-TM-51859	46	26	985-TM-71566	39	21	985-WC-11044	165	23
985-TM-51875	44	18	985-TM-71566	215	K-11	985-WC-11052	166	08
985-TM-51883	44	20	985-TM-72481	39	08	985-WC-11117	165	27
985-TM-51891	45	05	985-TM-72481	215	K-11	985-WC-61087	165	06
985-TM-51915	42	02	985-TM-91046	44	07	985-WT-02067	78	02
985-TM-51997	44	04	985-TM-91184	46	14	985-WT-03022	77	08
985-TM-52003	44	12	985-TM-91184	215	K-11	985-WT-03039	77	12
985-TM-52011	45	09	985-TM-91346	40		985-WT-03047	76	07
985-TM-52028	45	10	985-TM-91354	40		985-WT-03047	77	13
985-TM-52036	44	06	985-TM-91362	40		985-ZZ-10294	05	02
985-TM-52069	44	10	985-TM-91419	44	09	985-ZZ-10837	38	32
985-TM-52077	44	16	985-TM-91427	44	13	985-ZZ-10845	38	33
985-TM-52085	45	13	985-TM-92091	45	12	985-ZZ-10853	60	39
985-TM-52109	45	33	985-TM-92156	45	22	985-ZZ-10861	60	40
985-TM-52117	44	02	985-TM-92164	41	07	985-ZZ-14255	05	03
985-TM-52117	45	31	985-TM-92164	42	15	985-ZZ-14888	71	
985-TM-52133	42	13	985-TM-92164	43	11	985-ZZ-14888	215	K-39
985-TM-52141	43	08	985-TM-92237	44	25	985-ZZ-14888	215	K-39
985-TM-52271	46	08	985-TM-92318	44	05	985-ZZ-15868	166	01
985-TM-52385	44	23	985-TM-92326	45	11	985-ZZ-16256	198	17
985-TM-52628	42	04	985-TM-92472	46	03	985-ZZ-99671	74	10
985-TM-52636	42	07	985-TM-92642	42	06	985-ZZ-99711	74	13
985-TM-54179	42	18	985-TM-92642	44	15	985-ZZ-99728	74	14

PARTNO	FIG	ITEM	PARTNO	FIG	ITEM	PARTNO	FIG	ITEM
990-AL-11092	192	11	CCC05-32135	168	43	CCC07-24949	171	87
990-AL-11092	194	02	CCC05-32135	192	19	CCC07-24949	172	48
990-AL-11092	196	02	CCC05-32135	195	2	CCC07-26155	39	39
990-AL-11092	197	19	CCC05-38135	13	45	CCC07-26155	171	82
990-AL-11092	199	02	CCC05-38135	14	23	CCC07-27663	172	59
990-AL-11380	198	10	CCC05-38135	14	63	CCC07-32232	147	14
C1109-14016	153	34	CCC05-38135	20	29	CCC09-02400	172	64
C1109-15016	135	31	CCC05-38135	192	21	CCC09-03400	172	01
C1109-15016	136	31	CCC06-00610	19	05	CCC09-34000	171	14
C2501-10500	86	24	CCC06-00814	13	12	CCC09-52400	172	65
C2501-10522	86	23	CCC06-00814	14	54	CCC10-00414	20	28
C2501-10611	206	15	CCC06-00814	98	11	CCC10-00519	13	36
C2501-10622	206	14	CCC06-01014	192	18	CCC10-00519	18	10
C3001-01640	156	36	CCC06-01014	193	04	CCC10-00519	20	12
CBB00-06215	41	21	CCC06-01208	153	38	CCC10-00519	167	102
CBB00-06219	01	15	CCC06-01214	01	30	CCC10-00519	206	10
CBB30-05211	33	29	CCC06-01214	05	33	CCC10-00536	14	29
CBB30-06311	33	20	CCC06-01214	165	42	CCC10-00536	17	27
CBT02-32036	34	37	CCC06-01814	13	25	CCC10-00536	193	08
CBZ01-00635	34	31	CCC06-01814	86	43	CCC10-00538	197	21
CBZ01-00635	42	29	CCC06-01814	192	17	CCC10-00823	13	44
CBZ01-00635	43	25	CCC06-01814	193	03	CCC10-00823	14	25
CBZ01-00635	44	11	CCC06-01814	193	07	CCC13-00608	71	43
CBZ01-00635	44	17	CCC06-01814	195	6	CCCO6-01014	197	14
CBZ01-00635	45	14	CCC06-01814	197	12	CCP02-00000	39	29
CBZ01-01587	136	30	CCC06-01814	199	14	CCP02-00003	39	30
CBZ01-01905	135	30	CCC06-02514	12	09	CCP05-00000	153	21
CCA05-00410	71	39	CCC06-02514	13	41	CDS01-00090	134	03
CCA05-10817	05	45	CCC06-02514	14	19	CEC03-00035	13	23
CCC01-02057	86	33	CCC06-03014	196	13	CEC03-00035	15	33
CCC01-02507	100	07	CCC06-11014	199	08	CEC03-00035	16	10
CCC01-03008	206	13	CCC06-11214	198	14	CEC03-00519	15	34
CCC01-05012	182	02	CCC06-22110	185	65	CET01-10205	86	29
CCC01-06015	173	09	CCC06-22514	85	05	CET01-10210	19	04
CCC01-38135	167	101	CCC06-22514	102	34	CET01-10210	86	30
CCC05-01014	195	7	CCC06-22514	102	37	CET04-01175	12	02
CCC05-08065	139	15	CCC06-32135	185	66	CET04-02160	12	03
CCC05-08110	85	29	CCC07-21079	171	77	CFB01-10620	165	21
CCC05-14014	88	26	CCC07-21079	172	26	CFB01-10820	125	20
CCC05-16110	185	67	CCC07-22738	171	91	CFB01-10830	165	03
CCC05-22110	05	34	CCC07-23442	40	18	CFB01-10830	167	63
CCC05-22110	86	21	CCC07-23442	60	36	CFB01-10830	171	64
CCC05-22110	118	32	CCC07-23442	60	63	CFB01-10835	14	68
CCC05-22110	167	82	CCC07-23442	138	22	CFB01-10835	167	72
CCC05-22135	100	21	CCC07-23442	147	09	CFB01-10845	167	71
CCC05-22135	101	12	CCC07-24346	60	34	CFB01-10860	171	70
CCC05-22738	167	103	CCC07-24346	167	74	CFB0111025	206	57
CCC05-28110	90	20	CCC07-24346	171	89	CFB01-11025	165	30

PARTNO	FIG	ITEM	PARTNO	FIG	ITEM	PARTNO	FIG	ITEM
CFB0111030	60	42	CFB01-21200	171	19	CFB01-52095	31	06
CFB01-11030	125	07	CFB01-21240	38	35	CFB02-21010	60	19
CFB01-11030	147	12	CFB01-21240	72	45	CFB02-21015	125	12
CFB01-11035	02	08	CFB01-21240	172	31	CFB02-21020	47	26
CFB01-11035	02	13	CFB01-21245	198	07	CFB02-21030	50	29
CFB01-11035	171	74	CFB01-21250	72	31	CFB02-21035	51	12
CFB01-11040	60	29	CFB01-21255	34	13	CFB02-21045	47	30
CFB01-11040	165	17	CFB01-21255	74	11	CFB02-21045	51	15
CFB01-11050	171	37	CFB01-21255	94	04	CFB02-21045	52	02
CFB01-11055	171	36	CFB01-21260	125	19	CFB02-21045	52	10
CFB01-11220	153	55	CFB01-21265	33	04	CFB02-21060	52	03
CFB01-11230	153	56	CFB01-21265	198	12	CFB02-21065	47	28
CFB01-11260	171	29	CFB01-21275	172	35	CFB02-21065	51	13
CFB01-11270	171	57	CFB01-21280	60	16	CFB02-21075	47	29
CFB01-20870	86	57	CFB01-21280	171	45	CFB02-21075	52	09
CFB01-20870	95	15	CFB01-21285	32	59	CFB02-21200	153	50
CFB01-20870	96	25	CFB01-21285	60	13	CFB02-21215	32	36
CFB01-20870	99	03	CFB01-21285	171	61	CFB02-21215	51	04
CFB01-20875	85	26	CFB01-21290	171	44	CFB02-21220	171	07
CFB01-21030	32	17	CFB01-21295	87	18	CFB02-21220	172	55
CFB01-21030	42	25	CFB01-21295	167	23	CFB02-21290	51	06
CFB01-21030	43	05	CFB01-21440	95	12	CFB02-21610	135	08
CFB01-21030	43	21	CFB01-21460	46	24	CFB02-21610	136	10
CFB01-21030	43	27	CFB01-21640	134	09	CFB02-22450	70	10
CFB01-21030	48	22	CFB01-21650	153	08	CFB05-21245	206	04
CFB01-21030	48	39	CFB01-21655	04	07	CFB07-11445	172	62
CFB01-21030	49	18	CFB01-21655	38	28	CFB07-11480	04	05
CFB01-21035	34	39	CFB01-21655	38	30	CFB07-13075	137	09
CFB01-21035	36	19	CFB01-21655	169	06	CFB07-21430	126	31
CFB01-21035	40	23	CFB01-21660	03	12	CFB07-21430	134	13
CFB01-21035	46	06	CFB01-21665	31	19	CFB07-21430	180	26
CFB01-21040	32	50	CFB01-21665	153	46	CFB07-21435	78	04
CFB01-21040	34	35	CFB01-21680	60	38	CFB07-21435	153	26
CFB01-21045	05	53	CFB01-21685	153	30	CFB07-21440	32	24
CFB01-21045	36	18	CFB01-21690	03	04	CFB07-21440	41	18
CFB01-21045	47	23	CFB01-21690	156	29	CFB07-21440	43	30
CFB01-21045	47	24	CFB01-21695	167	10	CFB07-21440	110	18
CFB01-21045	47	32	CFB01-21695	171	30	CFB07-21445	03	09
CFB01-21050	192	10	CFB01-22060	180	25	CFB07-21450	102	24
CFB01-21055	32	64	CFB01-22090	34	50	CFB07-21465	71	23
CFB01-21055	60	07	CFB01-22090	70	40	CFB07-21495	34	03
CFB01-21060	60	61	CFB01-22465	71	47	CFB07-21645	46	32
CFB01-21065	50	30	CFB01-22470	66	15	CFB07-21865	71	17
CFB01-21075	40	11	CFB01-22480	70	48	CFB07-22250	06	04
CFB01-21080	48	40	CFB01-22480	72	13	CFB07-23085	143	03
CFB01-21085	32	45	CFB01-22480	138	25	CFB07-23995	126	21
CFB01-21090	47	16	CFB01-22495	30	03	CFB08-21440	01	05
CFB01-21095	47	31	CFB01-30816	50	06	CFB08-21800	26	02

PARTNO	FIG	ITEM	PARTNO	FIG	ITEM	PARTNO	FIG	ITEM
CFB08-21820	26	06	CFL01-17025	44	21	CFN01-11084	206	17
CFB08-21820	26	15	CFL01-17025	45	06	CFN01-11211	08	09
CFB10-21435	04	12	CFL01-18530	34	17	CFN01-11211	28	06
CFB23-12027	32	26	CFL01-19530	01	16	CFN01-11211	145	10
CFB23-12431	38	19	CFL01-19530	215	K-45	CFN01-11211	168	34
CFB23-13039	38	20	CFL02-11030	33	30	CFN01-11260	180	28
CFB25-10032	173	17	CFL02-13212	35	16	CFN01-11615	03	10
CFB25-11032	167	34	CFL02-13212	162	05	CFN01-20868	153	37
CFB25-11138	167	53	CFL02-14018	35	26	CFN01-21084	08	17
CFB25-11138	168	04	CFL02-14218	158	06	CFN01-21084	13	49
CFB25-11332	167	85	CFL02-14518	37	07	CFN01-21084	48	27
CFB25-11338	01	22	CFL02-16220	54	16	CFN01-21211	87	27
CFB25-21035	167	98	CFL02-16220	163	16	CFN01-21211	96	06
CFB25-21345	60	55	CFL04-00135	126	10	CFN01-21211	144	15
CFB25-21345	60	57	CFL04-10110	33	14	CFN01-21615	04	19
CFB25-21645	01	08	CFL04-10120	33	21	CFN01-21615	38	26
CFB25-21945	26	12	CFL04-10130	156	32	CFN01-22018	72	07
CFB27-11035	167	14	CFL04-10135	161	05	CFN04-11411	01	07
CFB27-11240	60	05	CFL04-10160	135	12	CFN04-11411	03	11
CFB27-11240	167	05	CFL04-10160	136	03	CFN04-11411	165	28
CFB27-11240	171	10	CFL04-10160	136	14	CFN04-11815	26	09
CFB27-11250	171	48	CFL04-10170	126	38	CFN04-11815	26	18
CFB27-11650	173	19	CFL04-10220	72	27	CFN04-13629	70	04
CFB27-21240	172	09	CFL04-10230	41	24	CFN05-11032	58	23
CFB27-21245	172	18	CFL06-10140	34	29	CFN19-01411	29	04
CFBO1-21050	197	05	CFL06-10150	42	30	CFN19-32016	159	11
CFF01-10045	39	31	CFL06-10150	43	26	CFN24-21011	125	13
CFG01-06038	171	67	CFL10-00093	215	K-13	CFN24-21011	171	83
CFG01-10045	167	31	CFL10-00135	156	15	CFN24-21214	171	78
CFG01-10045	173	16	CFL10-00135	215	K-14	CFN24-21415	04	06
CFG01-12051	60	10	CFN01-10324	11	32	CFN28-11011	39	40
CFG01-12051	167	51	CFN01-10324	17	09	CFN28-11011	40	19
CFG01-12051	168	06	CFN01-10432	11	35	CFN28-11011	147	10
CFG01-14061	171	17	CFN01-10432	13	06	CFN28-11011	172	49
CFG01-16045	167	13	CFN01-10432	14	18	CFN28-11214	172	27
CFG03-12034	167	62	CFN01-10432	11	45	CFN28-21011	60	33
CFG03-12039	168	25	CFN01-10547	11	26	CFN28-21011	60	41
CFG03-24061	60	21	CFN01-10632	185	59	CFN28-21011	138	23
CFG03-24061	167	03	CFN01-10652	190	03	CFN28-21011	167	75
CFG03-24061	172	17	CFN01-10808	165	37	CFN30-11009	192	13
CFK02-00519	165	02	CFN01-10868	18	16	CFN44-12224	156	26
CFL01-10810	40	02	CFN01-10868	19	07	CFN44-13033	143	04
CFL01-12012	158	03	CFN01-10868	95	17	CFN44-15252	215	K-13
CFL01-15520	33	22	CFN01-10868	96	11	CFN45-00410	71	41
CFL01-15520	33	31	CFN01-11084	12	07	CFN45-00817	05	47
CFL01-15520	126	29	CFN01-11084	100	26	CFN45-10817	01	28
CFL01-16020	33	15	CFN01-11084	101	17	CFNOI-20840	185	29
CFL01-17025	41	22	CFN01-11084	147	13	CFNOI-21084	185	50

PARTNO	FIG	ITEM	PARTNO	FIG	ITEM	PARTNO	FIG	ITEM
CFP01-02012	165	40	CFS01-11225	138	33	CFS01-21016	86	42
CFP01-03018	165	34	CFS01-11225	185	53	CFS01-21016	98	12
CFP01-03020	165	14	CFS01-11625	141	18	CFS01-21016	100	22
CFP01-05040	134	06	CFS01-12025	186	04	CFS01-21016	101	13
CFP01-05040	169	04	CFS01-13045	172	39	CFS01-21016	118	30
CFP01-08045	142	08	CFS01-13075	137	11	CFS01-21016	138	45
CFP01-11042	165	32	CFS01-20412	15	19	CFS01-21016	165	43
CFP02-10825	165	38	CFS01-20516	13	29	CFS01-21016	167	83
CFP02-11238	165	15	CFS01-20616	11	31	CFS01-21016	192	15
CFP02-11248	165	12	CFS01-20616	88	02	CFS01-21016	193	05
CFP04-00514	39	17	CFS01-20616	91	26	CFS01-21016	195	3
CFP04-00820	43	04	CFS01-20616	165	25	CFS01-21016	198	15
CFP04-00820	45	20	CFS01-20616	166	04	CFS01-21016	199	15
CFP04-01024	71	30	CFS01-20619	15	40	CFS01-21020	05	13
CFP04-01228	42	27	CFS01-20620	17	26	CFS01-21020	05	43
CFP04-01228	43	23	CFS01-20620	57	42	CFS01-21020	08	25
CFP04-01228	43	29	CFS01-20812	93	11	CFS01-21020	12	11
CFP04-01228	162	26	CFS01-20814	19	06	CFS01-21020	56	19
CFP04-01434	38	16	CFS01-20814	20	31	CFS01-21020	66	25
CFP04-01434	41	17	CFS01-20816	07	02	CFS01-21020	85	06
CFP04-01638	70	51	CFS01-20816	13	37	CFS01-21020	86	22
CFP04-01842	34	02	CFS01-20816	18	15	CFS01-21020	88	27
CFP04-01842	44	42	CFS01-20816	153	58	CFS01-21020	90	12
CFP04-01842	45	34	CFS01-20820	04	31	CFS01-21020	96	13
CFP04-01842	46	31	CFS01-20820	14	33	CFS01-21020	100	25
CFP04-01842	54	10	CFS01-20820	14	38	CFS01-21020	101	16
CFP04-01842	70	46	CFS01-20820	15	30	CFS01-21020	102	35
CFP04-01842	162	23	CFS01-20820	88	11	CFS01-21020	139	45
CFP04-01842	163	10	CFS01-20820	90	30	CFS01-21020	168	44
CFP13-06024	33	08	CFS01-20820	167	106	CFS01-21020	185	61
CFS01 31655	144	01	CFS01-20820	153	35	CFS01-21020	153	43
CFS01-10612	15	27	CFS01-20825	96	10	CFS01-21025	08	23
CFS01-10612	185	70	CFS01-20825	100	05	CFS01-21025	13	10
CFS01-10616	14	41	CFS01-20825	102	04	CFS01-21025	86	14
CFS01-10616	190	02	CFS01-20825	139	44	CFS01-21025	102	40
CFS01-10620	05	56	CFS01-20830	90	02	CFS01-21025	146	02
CFS01-10815	140	02	CFS01-20835	168	18	CFS01-21025	153	12
CFS01-10820	156	39	CFS01-20845	168	19	CFS01-21030	08	18
CFS01-10820	166	06	CFS01-20850	185	11	CFS01-21030	168	15
CFS01-10825	141	14	CFS01-20885	20	16	CFS01-21030	173	10
CFS01-11016	138	58	CFS01-21015	138	42	CFS01-21040	206	12
CFS01-11020	138	30	CFS01-21015	139	14	CFS01-21220	13	20
CFS01-11020	206	22	CFS01-21016	12	15	CFS01-21220	100	15
CFS01-11030	141	06	CFS01-21016	13	16	CFS01-21225	14	44
CFS01-11050	20	24	CFS01-21016	14	11	CFS01-21225	167	36
CFS01-11050	185	51	CFS01-21016	15	16	CFS01-21225	168	37
CFS01-11220	141	11	CFS01-21016	16	15	CFS01-21225	171	80
CFS01-11220	156	33	CFS01-21016	20	26	CFS01-21230	04	32

PARTNO	FIG	ITEM	PARTNO	FIG	ITEM	PARTNO	FIG	ITEM
CFS01-21230	66	19	CFS01-31230	58	28	CFS02-10612	139	46
CFS01-21230	101	03	CFS01-31230	60	35	CFS02-20512	14	51
CFS01-21230	102	27	CFS01-31230	86	16	CFS02-31225	96	03
CFS01-21230	167	59	CFS01-31230	138	21	CFS11-20410	139	47
CFS01-21230	171	86	CFS01-31230	144	06	CFS11-20510	139	38
CFS01-21235	171	03	CFS01-31230	145	04	CFS13-04616	50	27
CFS01-21240	168	08	CFS01-31230	172	22	CFS13-20620	05	07
CFS01-21430	73	10	CFS01-31230	173	23	CFS13-21250	139	49
CFS01-21630	03	13	CFS01-31230	153	16	CFS13-40550	32	54
CFS01-30812	135	22	CFS01-31235	08	06	CFS13-51235	88	15
CFS01-30812	136	24	CFS01-31235	39	32	CFS13-51235	89	02
CFS01-30816	71	44	CFS01-31235	42	11	CFS13-51235	91	02
CFS01-30820	46	17	CFS01-31235	60	64	CFS14-41415	162	25
CFS01-30825	40	08	CFS01-31235	172	13	CFS14-41450	162	24
CFS01-31016	51	03	CFS01-31235	172	78	CFS14-41460	163	11
CFS01-31020	39	09	CFS01-31235	180	34	CFS14-41460	163	12
CFS01-31020	39	12	CFS01-31240	167	79	CFS15-10310	50	13
CFS01-31020	135	25	CFS01-31245	28	03	CFS15-10310	50	23
CFS01-31020	135	28	CFS01-31245	60	02	CFS15-10316	17	12
CFS01-31020	136	27	CFS01-31250	167	100	CFS15-10330	15	21
CFS01-31020	172	45	CFS01-31285	56	07	CFS15-10345	11	33
CFS01-31025	33	18	CFS01-31425	139	35	CFS15-10412	50	17
CFS01-31025	39	19	CFS01-31625	144	12	CFS15-10425	11	36
CFS01-31025	39	37	CFS01-31630	31	16	CFS15-10520	17	19
CFS01-31025	40	16	CFS01-31630	144	10	CFS15-10612	139	05
CFS01-31030	39	22	CFS01-31635	05	19	CFS15-10616	139	54
CFS01-31030	45	17	CFS01-31640	03	15	CFS15-20620	139	31
CFS01-31030	47	08	CFS01-31640	31	11	CFS15-30416	11	14
CFS01-31030	47	13	CFS01-31640	126	06	CFS17-10616	11	22
CFS01-31220	72	34	CFS01-31645	126	18	CFS33-03060	32	62
CFS01-31220	72	52	CFS01-32045	142	02	CFS33-03060	69	08
CFS01-31225	04	27	CFS01-32045	143	05	CFS33-03060	162	12
CFS01-31225	05	22	CFS01-32055	70	53	CFS33-03068	46	35
CFS01-31225	08	29	CFS01-32055	74	08	CFS33-13052	68	09
CFS01-31225	34	26	CFS01-32450	138	19	CFSO1-10616	197	25
CFS01-31225	72	20	CFS01-32455	74	05	CFSO1-21016	197	15
CFS01-31225	126	13	CFS01-32460	72	37	CFSOI-10820	185	30
CFS01-31225	145	15	CFS01-32460	126	44	CFSOI-20865	185	28
CFS01-31225	147	07	CFS013-41445	162	06	CFT05-21650	38	25
CFS01-31225	172	24	CFS01-70512	92	22	CFT05-32050	72	06
CFS01-31230	01	20	CFS02-10408	138	48	CFT10-63680	70	03
CFS01-31230	02	05	CFS02-10408	138	49	CFW01-10307	11	40
CFS01-31230	33	09	CFS02-10412	11	46	CFW01-10307	17	11
CFS01-31230	33	26	CFS02-10412	14	61	CFW01-10307	50	14
CFS01-31230	34	45	CFS02-10416	14	15	CFW01-10307	50	24
CFS01-31230	38	17	CFS02-10510	05	02a	CFW01-10410	11	41
CFS01-31230	42	31	CFS02-10516	11	27	CFW01-10410	13	07
CFS01-31230	56	03	CFS02-10530	18	08	CFW01-10410	14	16

PARTNO	FIG	ITEM	PARTNO	FIG	ITEM	PARTNO	FIG	ITEM
CFW01-10410	50	10	CFW01-10825	20	14	CFW01-11030	173	11
CFW01-10513	11	28	CFW01-10825	20	32	CFW01-11030	186	05
CFW01-10513	13	31	CFW01-10825	153	36	CFW01-11030	192	6
CFW01-10513	14	53	CFW01-10825	153	59	CFW01-11030	193	06
CFW01-10513	17	20	CFW01-10929	167	33	CFW01-11030	195	4
CFW01-10513	32	55	CFW01-10929	173	18	CFW01-11030	206	18
CFW01-10513	92	23	CFW01-11020	138	38	CFW01-11036	118	31
CFW01-10619	05	08	CFW01-11030	02	09	CFW01111236	60	03
CFW01-10619	14	24	CFW01-11030	02	14	CFW01-11134	167	54
CFW01-10619	14	43	CFW01-11030	05	14	CFW01-11134	168	05
CFW01-10619	15	41	CFW01-11030	05	44	CFW01-11236	02	15
CFW01-10619	17	25	CFW01-11030	08	16	CFW01-11236	04	28
CFW01-10619	50	28	CFW01-11030	12	23	CFW01-11236	04	33
CFW01-10619	57	43	CFW01-11030	13	08	CFW01-11236	05	23
CFW01-10619	88	03	CFW01-11030	14	12	CFW01-11236	05	51
CFW01-10619	138	44	CFW01-11030	15	13	CFW01-11236	08	08
CFW01-10619	139	50	CFW01-11030	16	12	CFW01-11236	13	26
CFW01-10619	165	22	CFW01-11030	20	27	CFW01-11236	14	45
CFW01-10619	166	05	CFW01-11030	32	18	CFW01-11236	28	05
CFW01-10619	185	71	CFW01-11030	32	65	CFW01-11236	32	37
CFW01-10619	190	04	CFW01-11030	33	19	CFW01-11236	32	60
CFW01-10823	140	03	CFW01-11030	36	20	CFW01-11236	33	10
CFW01-10825	07	03	CFW01-11030	56	20	CFW01-11236	33	27
CFW01-10825	13	42	CFW01-11030	57	27	CFW01-11236	38	36
CFW01-10825	13	53	CFW01-11030	57	30	CFW01-11236	51	16
CFW01-10825	14	28	CFW01-11030	60	09	CFW01-11236	56	04
CFW01-10825	14	40	CFW01-11030	66	26	CFW01-11236	57	12
CFW01-10825	15	31	CFW01-11030	85	07	CFW01-11236	57	17
CFW01-10825	18	13	CFW01-11030	86	15	CFW01-11236	58	19
CFW01-10825	19	08	CFW01-11030	88	28	CFW01-11236	66	20
CFW01-10825	71	45	CFW01-11030	90	13	CFW01-11236	86	17
CFW01-10825	85	27	CFW01-11030	96	14	CFW01-11236	87	19
CFW01-10825	88	12	CFW01-11030	98	13	CFW01-11236	88	16
CFW01-10825	90	03	CFW01-11030	100	23	CFW01-11236	89	03
CFW01-10825	90	31	CFW01-11030	101	14	CFW01-11236	91	03
CFW01-10825	96	12	CFW01-11030	102	36	CFW01-11236	94	03
CFW01-10825	102	05	CFW01-11030	135	26	CFW01-11236	95	13
CFW01-10825	125	15	CFW01-11030	135	29	CFW01-11236	96	04
CFW01-10825	135	23	CFW01-11030	136	28	CFW01-11236	101	04
CFW01-10825	136	25	CFW01-11030	138	31	CFW01-11236	126	14
CFW01-10825	139	53	CFW01-11030	139	51	CFW01-11236	137	13
CFW01-10825	141	16	CFW01-11030	147	15	CFW01-11236	138	35
CFW01-10825	165	04	CFW01-11030	153	13	CFW01-11236	141	13
CFW01-10825	166	07	CFW01-11030	165	44	CFW01-11236	144	07
CFW01-10825	167	73	CFW01-11030	167	15	CFW01-11236	145	05
CFW01-10825	168	20	CFW01-11030	168	10	CFW01-11236	147	08
CFW01-10825	171	65	CFW01-11030	171	38	CFW01-11236	162	27
CFW01-10825	185	31	CFW01-11030	172	14	CFW01-11236	167	22

PARTNO	FIG	ITEM	PARTNO	FIG	ITEM	PARTNO	FIG	ITEM
CFW01-11236	168	33	CFW02-10408	14	17	CFW05-08023	50	07
CFW01-11236	171	08	CFW02-10416	13	04	CFW05-08023	86	58
CFW01-11236	172	10	CFW02-10416	15	20	CFW05-08023	95	16
CFW01-11236	173	24	CFW02-10510	11	29	CFW05-08023	96	26
CFW01-11236	180	29	CFW02-10510	13	30	CFW05-08023	99	04
CFW01-11236	198	08	CFW02-10510	14	52	CFW05-08023	100	06
CFW01-11236	198	16	CFW02-10510	18	09	CFW05-08023	167	64
CFW01-11236	153	17	CFW02-10616	14	42	CFW05-08023	171	68
CFW01-11338	60	56	CFW02-10616	15	35	CFW05-10032	12	12
CFW01-11338	167	86	CFW02-10616	138	43	CFW05-10032	32	46
CFW01-11442	32	25	CFW02-10616	139	52	CFW05-10032	32	51
CFW01-11442	54	13	CFW02-10816	14	34	CFW05-10032	34	36
CFW01-11442	78	05	CFW02-10816	14	39	CFW05-10032	34	40
CFW01-11442	134	14	CFW02-10816	15	26	CFW05-10032	39	10
CFW01-11442	139	37	CFW02-10816	18	14	CFW05-10032	39	13
CFW01-11442	162	07	CFW02-10816	20	15	CFW05-10032	39	20
CFW01-11442	163	13	CFW02-10816	141	15	CFW05-10032	39	23
CFW01-11442	172	63	CFW02-10816	165	39	CFW05-10032	39	38
CFW01-11442	180	35	CFW02-10825	20	33	CFW05-10032	39	41
CFW01-11648	03	14	CFW02-11020	12	08	CFW05-10032	40	12
CFW01-11648	04	09	CFW02-11020	13	09	CFW05-10032	40	17
CFW01-11648	04	22	CFW02-11020	14	14	CFW05-10032	40	20
CFW01-11648	31	12	CFW02-11020	20	23	CFW05-10032	40	24
CFW01-11648	38	27	CFW02-11020	165	33	CFW05-10032	43	06
CFW01-11648	141	19	CFW02-11020	206	20	CFW05-10032	43	22
CFW01-11648	144	05	CFW02-11225	05	50	CFW05-10032	43	28
CFW01-11648	144	11	CFW02-11225	08	07	CFW05-10032	45	18
CFW01-11648	156	30	CFW02-11225	13	24	CFW05-10032	46	07
CFW01-11648	167	09	CFW02-11225	77	09	CFW05-10032	47	09
CFW01-11648	169	09	CFW02-11225	145	06	CFW05-10032	47	14
CFW01-11648	171	32	CFW02-11225	165	13	CFW05-10032	47	17
CFW01-11648	173	20	CFW02-11245	137	12	CFW05-10032	47	25
CFW01-11854	26	03	CFW02-11245	138	34	CFW05-10032	47	27
CFW01-11854	26	10	CFW02-11425	01	23	CFW05-10032	47	33
CFW01-11854	26	19	CFW02-11445	139	36	CFW05-10032	48	23
CFW01-11957	26	13	CFW02-11630	04	08	CFW05-10032	48	28
CFW01-12032	28	04	CFW02-12032	42	12	CFW05-10032	48	41
CFW01-12032	74	12	CFW02-12250	141	12	CFW05-10032	49	19
CFW01-12268	06	06	CFW02-13040	142	07	CFW05-10032	50	31
CFW01-12472	70	49	CFW02-21626	04	20	CFW05-10032	51	14
CFW01-12472	138	27	CFW03-10022	13	18	CFW05-10032	52	08
CFW01-13075	137	10	CFW03-10022	14	70	CFW05-10032	60	32
CFW01-21442	73	09	CFW03-10510	05	02b	CFW05-10032	102	41
CFW02-10305	11	34	CFW04-12032	60	12	CFW05-10032	125	08
CFW02-10305	15	22	CFW04-14045	41	19	CFW05-10032	138	24
CFW02-10305	17	10	CFW05-08023	14	67	CFW05-10032	147	11
CFW02-10408	11	37	CFW05-08023	40	09	CFW05-10032	165	18
CFW02-10408	13	05	CFW05-08023	46	18	CFW05-10032	167	76

PARTNO	FIG	ITEM	PARTNO	FIG	ITEM	PARTNO	FIG	ITEM
CFW05-10032	171	84	CFW05-16045	38	29	CFWOI-11236	185	54
CFW05-10032	172	50	CFW05-16045	38	31	CFY01-10819	165	35
CFW05-10032	206	11	CFW05-16045	44	44	CFY01-20832	165	36
CFW05-11032	146	03	CFW05-16045	46	33	CFY01-21248	165	10
CFW05-12032	01	21	CFW05-16045	135	09	CFZ01-00635	42	09
CFW05-12032	04	29	CFW05-16045	135	18	CGR01-01610	14	02
CFW05-12032	04	34	CFW05-16045	136	11	CGR05-01008	11	42
CFW05-12032	05	24	CFW05-16045	136	20	CHC01-08048	161	18
CFW05-12032	33	05	CFW05-16045	153	31	CHC04-34037	162	09
CFW05-12032	34	14	CFW05-16045	153	09	CHH03-00606	100	18
CFW05-12032	34	27	CFW05-16045	153	47	CHH03-00608	100	19
CFW05-12032	34	46	CFW05-18045	26	04	CHH03-00608	101	09
CFW05-12032	38	18	CFW05-18045	26	07	CHH03-00608	101	10
CFW05-12032	39	33	CFW05-18045	26	16	CHH03-00611	100	20
CFW05-12032	42	26	CFW05-18045	71	18	CHH03-00611	101	11
CFW05-12032	42	32	CFW05-20060	34	51	CHH09-02410	171	46
CFW05-12032	56	08	CFW05-20060	70	41	CHH09-02410	215	K-56
CFW05-12032	57	13	CFW05-20060	70	54	CHH11-02410	215	K-50
CFW05-12032	57	22	CFW05-20060	71	48	CHH13-01208	167	60
CFW05-12032	70	28	CFW05-20060	72	08	CHH13-01208	215	K-57
CFW05-12032	72	21	CFW05-20060	74	09	CHH13-02410	167	01
CFW05-12032	72	32	CFW05-20060	142	03	CHH13-02410	215	K-57
CFW05-12032	72	46	CFW05-20060	143	06	CHH13-12412	171	47
CFW05-12032	72	53	CFW05-20060	180	31	CHH13-12412	215	K-56
CFW05-12032	87	28	CFW05-24060	06	05	CHH15-02047	215	K-50
CFW05-12032	96	07	CFW05-24060	30	04	CHH15-02406	60	59
CFW05-12032	100	16	CFW05-24060	66	16	CHH15-02406	215	K-50
CFW05-12032	102	28	CFW05-24060	70	11	CHH15-02406	215	K-59
CFW05-12032	125	18	CFW05-24060	70	14	CHH15-02407	60	58
CFW05-12032	138	59	CFW05-24060	72	38	CHH15-02407	215	K-59
CFW05-12032	141	07	CFW05-24060	74	06	CHH22-21210	05	29
CFW05-12032	167	04	CFW05-24060	126	45	CHH26-12011	60	06
CFW05-12032	171	04	CFW05-24060	138	20	CHH26-12011	215	K-59
CFW05-12032	172	19	CFW05-31645	31	17	CHH26-12407	215	K-59
CFW05-12440	138	26	CFW05-31645	31	20	CHH26-12407	60	28
CFW05-14040	43	31	CFW05-32060	31	07	CHH26-12410	172	41
CFW05-14045	01	06	CFW05-33090	66	12	CHH26-12410	215	K-54
CFW05-14045	03	08	CFW05-36090	70	05	CHH30-07422	60	45
CFW05-14045	04	13	CFW05-39090	126	22	CHH30-07422	215	K-50
CFW05-14045	34	04	CFW06-10032	167	92	CHH30-25820	171	11
CFW05-14045	46	25	CFW10-10410	50	18	CHH30-25820	172	03
CFW05-14045	71	24	CFW23-11332	138	46	CHH30-27422	38	37
CFW05-14045	102	25	CFW33-10060	14	13	CHS01-03030	215	K-43
CFW05-14045	110	19	CFW35-12070	145	14	CHS01-05110	70	44
CFW05-14045	126	32	CFWO1-10619	197	26	CHS01-05110	215	K-42
CFW05-14045	153	27	CFWO1-11030	197	06	CHS01-05150	32	16
CFW05-16045	01	09	CFWO1-11030	197	16	CHS01-05200	46	23
CFW05-16045	05	20	CFWOI-11030	185	52	CHS01-05240	215	K-42

PARTNO	FIG	ITEM	PARTNO	FIG	ITEM	PARTNO	FIG	ITEM
CHS01-05320	70	37	CHS01-12140	153	15	CHS01-13048	215	K-58
CHS01-05320	215	K-42	CHS01-13025	46	15	CHS01-13048	215	K-60
CHS01-05320	215	K-43	CHS01-13025	167	61	CHS01-13048	153	49
CHS01-11210	215	K-46	CHS01-13025	168	22	CHS01-13050	171	53
CHS01-11210	215	K-52	CHS01-13025	215	K-47	CHS01-13050	215	K-55
CHS01-12010	215	K-46	CHS01-13025	215	K-55	CHS01-13055	215	K-46
CHS01-12010	215	K-52	CHS01-13025	215	K-58	CHS01-13055	215	K-52
CHS01-12010	153	33	CHS01-13030	167	57	CHS01-13055	153	24
CHS01-12012	159	08	CHS01-13030	168	17	CHS01-15075	34	49
CHS01-12055	39	03	CHS01-13030	215	K-47	CHS01-15170	01	19
CHS01-12055	46	29	CHS01-13030	215	K-58	CHS01-15170	215	K-45
CHS01-12060	39	27	CHS01-13032	171	58	CHS01-15240	70	39
CHS01-12060	56	15	CHS01-13032	215	K-55	CHS01-22016	159	12
CHS01-12060	57	15	CHS01-13035	57	24	CHS01-33032	60	18
CHS01-12060	59	03	CHS01-13035	58	02	CHS01-33032	215	K-60
CHS01-12060	60	17	CHS01-13035	171	35	CHS01-33035	60	08
CHS01-12060	171	28	CHS01-13035	171	63	CHS01-33035	215	K-60
CHS01-12060	172	34	CHS01-13035	215	K-46	CHS01-71009	48	26
CHS01-12060	215	K-49	CHS01-13035	215	K-47	CHS01-71009	50	04
CHS01-12060	215	K-53	CHS01-13035	215	K-49	CHS01-72010	36	17
CHS01-12060	215	K-55	CHS01-13035	215	K-52	CHS01-72012	47	22
CHS01-12060	215	K-60	CHS01-13035	215	K-55	CHS01-72012	48	45
CHS01-12065	38	13	CHS01-13035	153	11	CHS01-72014	32	35
CHS01-12065	38	22	CHS01-13038	46	30	CHS01-72014	40	22
CHS01-12070	171	06	CHS01-13038	48	33	CHS01-72015	49	21
CHS01-12070	172	08	CHS01-13040	32	23	CHS01-72016	32	44
CHS01-12070	215	K-53	CHS01-13045	05	06	CHS01-72016	32	49
CHS01-12070	215	K-55	CHS01-13045	14	66	CHS01-72018	32	58
CHS01-12075	126	09	CHS01-13045	171	41	CHS01-72018	48	36
CHS01-12075	171	75	CHS01-13045	215	K-46	CHS01-72018	48	44
CHS01-12075	215	K-53	CHS01-13045	215	K-52	CHS01-72018	49	16
CHS01-12075	215	K-55	CHS01-13045	215	K-53	CHS01-72018	49	30
CHS01-12080	53	04	CHS01-13045	215	K-55	CHS01-72020	32	34
CHS01-12085	172	61	CHS01-13045	153	25	CHS01-72020	38	10
CHS01-12085	215	K-53	CHS01-13048	56	06	CHS01-72021	49	04
CHS01-12090	39	04	CHS01-13048	56	10	CHS01-72075	38	34
CHS01-12110	126	04	CHS01-13048	57	19	CHS01-72075	60	04
CHS01-12110	153	07	CHS01-13048	58	07	CHS01-72075	215	K-49
CHS01-12130	56	02	CHS01-13048	58	14	CHS01-72075	215	K-60
CHS01-12130	60	44	CHS01-13048	60	14	CHS01-73022	35	15
CHS01-12130	171	02	CHS01-13048	167	02	CHS01-73022	38	05
CHS01-12130	172	12	CHS01-13048	171	16	CHS01-73025	32	66
CHS01-12130	215	K-49	CHS01-13048	172	16	CHS01-73025	38	06
CHS01-12130	215	K-53	CHS01-13048	215	K-46	CHS01-73025	48	43
CHS01-12130	215	K-55	CHS01-13048	215	K-49	CHS01-73025	49	20
CHS01-12130	215	K-60	CHS01-13048	215	K-52	CHS01-73025	49	29
CHS01-12140	215	K-46	CHS01-13048	215	K-53	CHS01-73028	32	33
CHS01-12140	215	K-52	CHS01-13048	215	K-55	CHS01-73028	38	09

PARTNO	FIG	ITEM	PARTNO	FIG	ITEM	PARTNO	FIG	ITEM
CHS01-73028	38	15	CHS07-10120	46	22	CPL01-20810	36	02
CHS01-73028	38	24	CHS10-73038	48	35	CPL01-20810	36	12
CHS01-73028	47	21	CHS10-73038	48	38	CPL01-20810	36	15
CHS01-73028	52	07	CHT01-00408	71	42	CPL01-20810	37	02
CHS01-73030	48	37	CHT01-00808	01	29	CPL01-20810	47	11
CHS01-73032	40	07	CHT01-00817	05	48	CPL01-20810	60	26
CHS01-73032	47	15	CLN01-00000	01	25	CPL01-21217	07	05
CHS01-73032	48	42	CLN01-00000	134	11	CPL01-23022	55	04
CHS01-73032	49	28	CLN01-10675	01	13	CPL02-10810	35	03
CHS01-73035	32	32	CLP01-18018	169	05	CPL02-10810	36	03
CHS01-73035	32	67	CLP02-08016	169	07	CPL02-10810	110	04
CHS01-73035	38	08	CPF01-00063	181	03	CPL02-11113	50	02
CHS01-73035	38	14	CPF05-10710	47	35	CPL02-11217	52	12
CHS01-73035	38	23	CPF05-10813	39	35	CPL02-11521	52	13
CHS01-73035	39	18	CPF06-01012	71	21	CPL02-11726	32	20
CHS01-73035	40	10	CPF06-01012	71	38	CPL02-11933	46	02
CHS01-73035	48	21	CPF12-10610	71	37	CPL03-12412	72	23
CHS01-73038	36	16	CPF14-10817	01	26	CPL03-13620	32	03
CHS01-73040	32	31	CPF34-10442	05	26	CPL03-13620	68	06
CHS01-73040	47	07	CPF36-00628	05	28	CPL03-13620	69	04
CHS01-73042	32	57	CPF37-30400	05	25	CPL06-11007	71	20
CHS01-73045	38	07	CPF40-00411	71	40	CPL06-11209	34	33
CHS01-73045	47	12	CPF40-00813	05	46	CPL06-11812	52	06
CHS01-E2095	33	07	CPF40-10813	01	27	CPL06-12412	35	31
CHS01-E3030	35	25	CPL01-10211	153	52	CPL06-13618	46	11
CHS01-E3035	37	06	CPL01-10312	153	51	CPL07-14220	37	09
CHS01-E3038	35	09	CPL01-10415	153	53	CPL09-01215	72	41
CHS01-E5230	33	25	CPL01-10810	02	11	CPL09-11215	01	31
CHS01-F1006	32	53	CPL01-10810	32	30	CPL09-11215	72	47
CHS02-02020	15	17	CPL01-10810	33	34	CPL09-11215	215	K-43
CHS02-05240	156	19	CPL01-10810	47	19	CPL09-11822	71	06
CHS02-05240	215	K-14	CPL01-10810	48	03	CPL09-12430	71	49
CHS02-12012	159	09	CPL01-10810	49	02	CPL09-12430	72	39
CHS02-12016	159	13	CPL01-10810	52	11	CPL09-12430	215	K-43
CHS03-02034	110	07	CPL01-10810	71	36	CPL10-01210	47	34
CHS03-02434	215	K-43	CPL01-10810	171	50	CPL10-10180	49	25
CHS03-03634	46	12	CPL01-10810	172	21	CPW00-06012	15	25
CHS03-03634	215	K-43	CPL01-11113	32	29	CPW00-06012	15	39
CHS03-11823	52	05	CPL01-11113	32	48	CPW01-06	206	51
CHS03-13034	49	12	CPL01-11113	48	02	CPW01-10825	93	12
CHS03-13034	159	14	CPL01-11113	71	02	CPW02-08016	15	29
CHS03-33634	32	04	CPL01-11113	165	20	CPW02-08016	20	22
CHS03-E2434	35	18	CPL01-11130	49	24	CPW02-08016	20	30
CHS03-E2434	35	32	CPL01-11521	32	21	CPW02-11020	168	46
CHS03-E3634	35	12	CPL01-13620	69	02	CPW02-11225	76	07
CHS03-E3634	35	29	CPL01-20108	55	03	CPW03-10022	15	12
CHS03-E4234	37	10	CPL01-20108	59	02	CPW03-10022	16	11
CHS07-10110	32	15	CPL01-20810	35	02	CPW03-10022	20	25

PARTNO	FIG	ITEM	PARTNO	FIG	ITEM	PARTNO	FIG	ITEM
CPW03-10022	86	34	MTC 9899	168	41	VA 3219	215	K-14
CPW03-10022	118	29	MTC 9899	215	K-47	VC 7673	96	15
CPW03-10022	167	81	PB 2194	135	16	VC 7673	206	16
CPW03-10022	168	45	PB 2194	136	18	VC-7673	13	40
CPW03-10022	206	21	PB 6551	156	10	VD 4677	168	40
CPW05-12130	13	27	PB 6551	215	K-14	VD 5076	135	19
CPW09-20040	142	04	PB 6552	156	09	VD 5076	136	21
CPW13-08015	167	105	PB 6552	215	K-14	VD 5076	215	K-1
CPW13-08016	18	12	PB 6553	156	08	VG 9096	167	52
CPW13-10022	139	10	PB 6553	215	K-14	VG 9096	215	K-58
CPW13-12025	141	10	PB 6554	156	07	VG 9097	167	32
CPW15-10022	86	13	PB 6554	215	K-14	VG 9097	173	25
CPW15-10022	192	12	PB 7325	156	21	VG 9097	215	K-58
CPW15-10022	197	04	PB 7325	215	K-14	VL 9602	15	15
CPW15-12025	04	25	R 1073-3	139	09	VL-9602	13	43
CPW15-16032	144	09	R 1073-3	207	32	VL-9602	16	14
CPW15-21022	196	12	SAE10W	135	32	VM 3491	167	24
CPW17-16032	173	21	SAE10W	136	32	VM 3492	167	50
CPW19-12025	167	21	SR 2586	100	04	VY 7502	167	45
CPW25-12060	95	22	SV 2581	168	03	WA 2571	172	79
CPW25-12060	180	15	SV 2581	215	K-47			
CPW25-12082	144	16	TC 9898	167	19			
CPW33-08050	14	58	TC 9898	215	K-58			
CPW33-10022	86	44	TC 9899	167	41			
CPW33-10050	08	22	TC 9899	215	K-58			
CPW33-10070	08	21	TF 3238	167	18			
CPW35-10070	60	43	TF 5069	202	04			
CPW35-12070	167	78	TFH01-08018	134	07			
CPW35-12070	171	39	TFL01-00816	134	08			
CPW35-12080	145	12	TG 0097	05	11			
CPW35-12080	172	28	TH 5604	167	25			
CPW35-12080	60	20	TH 5604	168	30			
CPW35-12100	145	03	TH 6942	168	27			
CPW35-12130	08	28	TH 5604	215	K-47			
CPW35-16100	144	08	TH 5604	215	K-58			
CPW39-12080	171	81	TL 3995	172	74			
CRB01-13052	49	27	TL 3995	215	K-53			
CRB01-13052	68	10	TL 4501	167	40			
CRB01-13052	69	06	TR 2767	167	48			
CSD01-00090	180	33	TR 2767	171	59			
CSP02-01208	54	17	TZB01-10004	85	28			
CSR01-11004	44	19	TZB01-10004	90	19			
CSR01-11205	42	14	TZB01-10004	196	14			
CSR01-11205	43	10	VA 3213	156	13			
CSR01-20352	41	04	VA 3213	215	K-14			
CSR01-20854	41	03	VA 3216	156	11			
CWW01-02035	70	50	VA 3216	215	K-14			
DF 3987	86	32	VA 3219	156	12			