(15)

Easy to fold. / transform's in thick stick / allows you to walk on stair case.
transform's in chair.

compressable hollow tube (metal).

while climbing upstairs

closes/opens

y

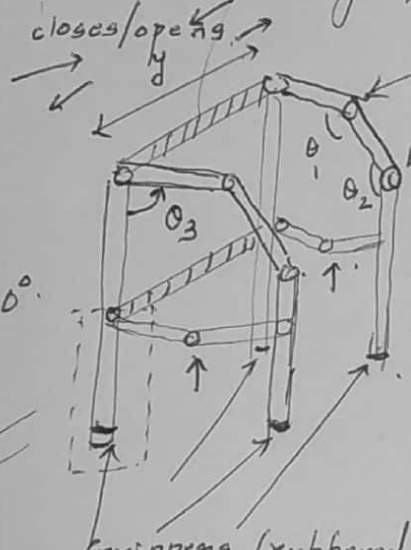

this θ_1 & θ_2 can be locked and unlocked.

$90 \le \theta_3 < 180°$

* So unlock it leave it in relax position. like following
* place the front leg on the next step of stair case

Grippens (rubbered base).

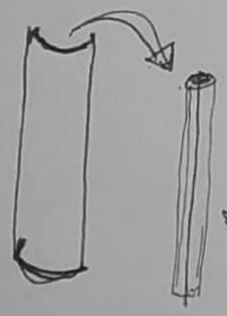

rolled cloth (mesh).

unroll it

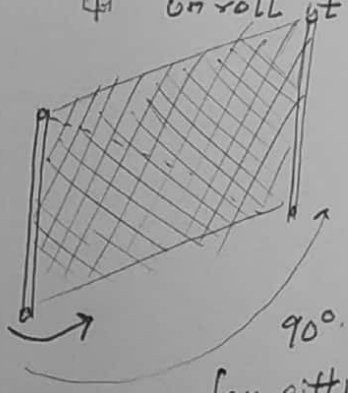

90°

for sitting.

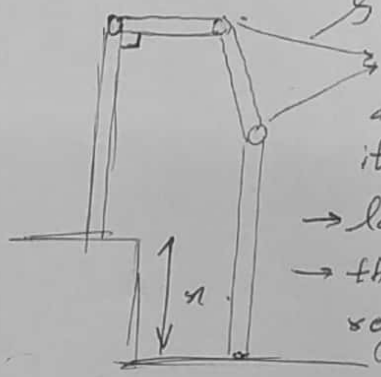

Since this two are unlocked and relaxed it will attain it stable position as shown
→ lock the angle.
→ the frame becomes regid.

for any stair case. 'x' remain's same with this above configuration, we can climb the stair case

for plaine surface again unlock leave it go in relax position and lock the config.

Scanned by CamScanner

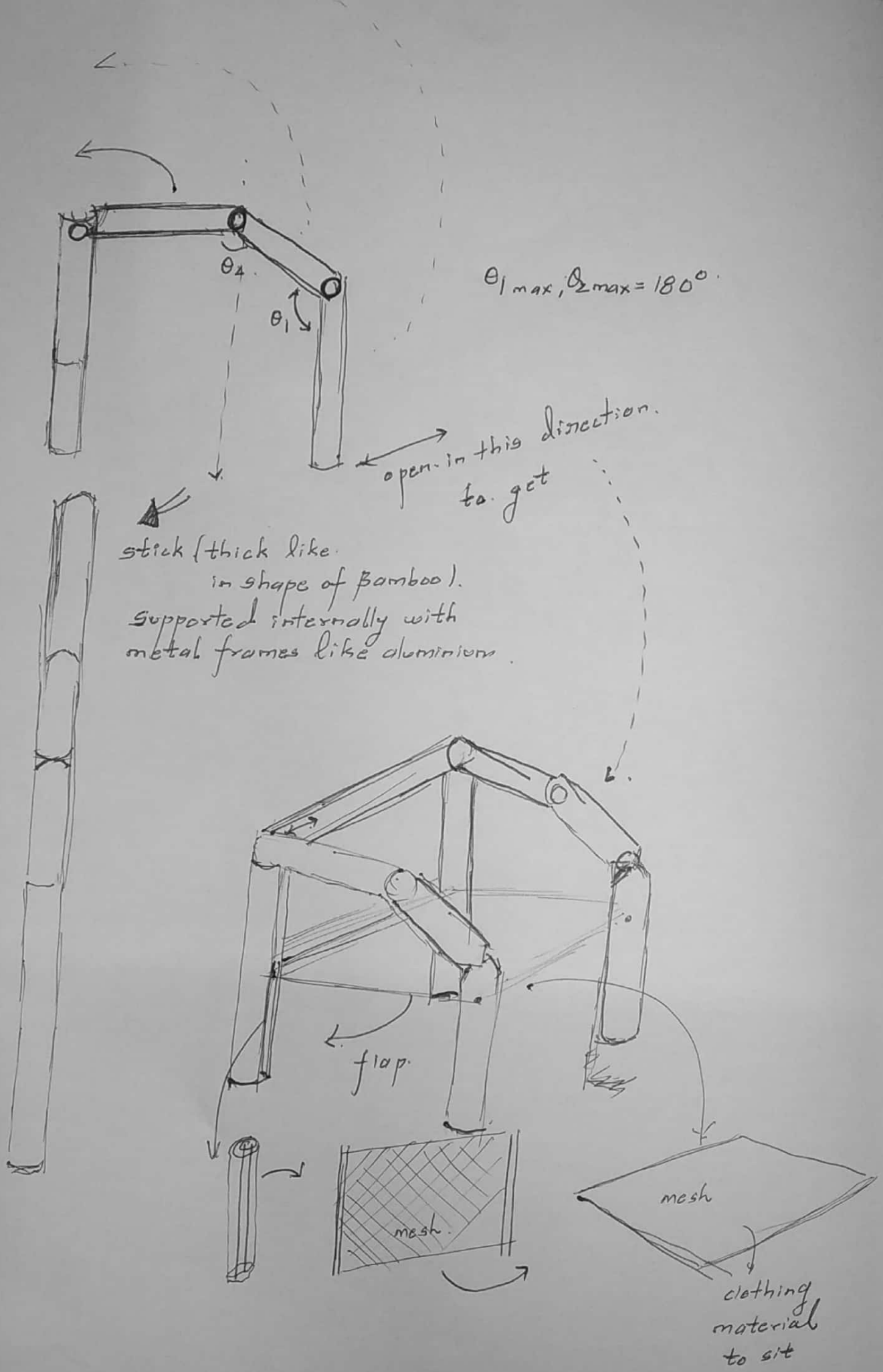

Scanned by CamScanner