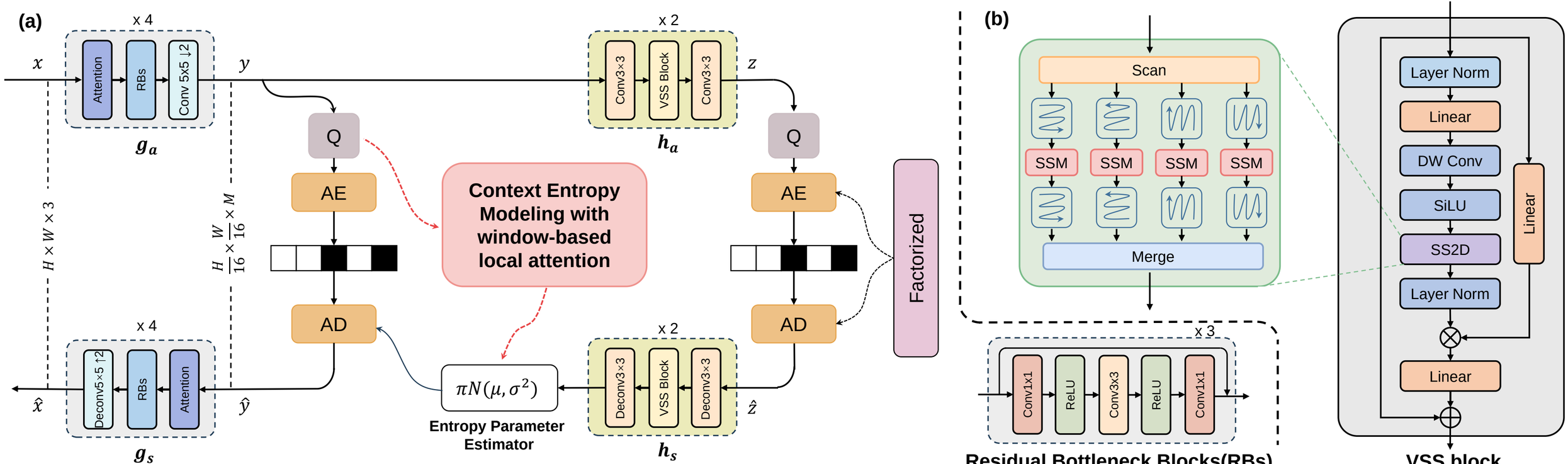
(a)
x 4
Attention
RBs
Conv 5x5 ↓2
g_a
x 2
Conv3×3
VSS Block
Conv3×3
h_a
Q
AE
AD
Context Entropy Modeling with window-based local attention
Factorized
$H \times W \times 3$
$\frac{H}{16} \times \frac{W}{16} \times M$
x 4
Deconv5×5 ↑2
RBs
Attention
g_s
$\pi N(\mu, \sigma^2)$
Entropy Parameter Estimator
x 2
Deconv3×3
VSS Block
Deconv3×3
h_s
(b)
Scan
SSM
Merge
x 3
Conv1x1
ReLU
Conv3x3
ReLU
Conv1x1
Residual Bottleneck Blocks(RBs)
Layer Norm
Linear
DW Conv
SiLU
SS2D
Layer Norm
Linear
Linear
VSS block