Connectors & Power

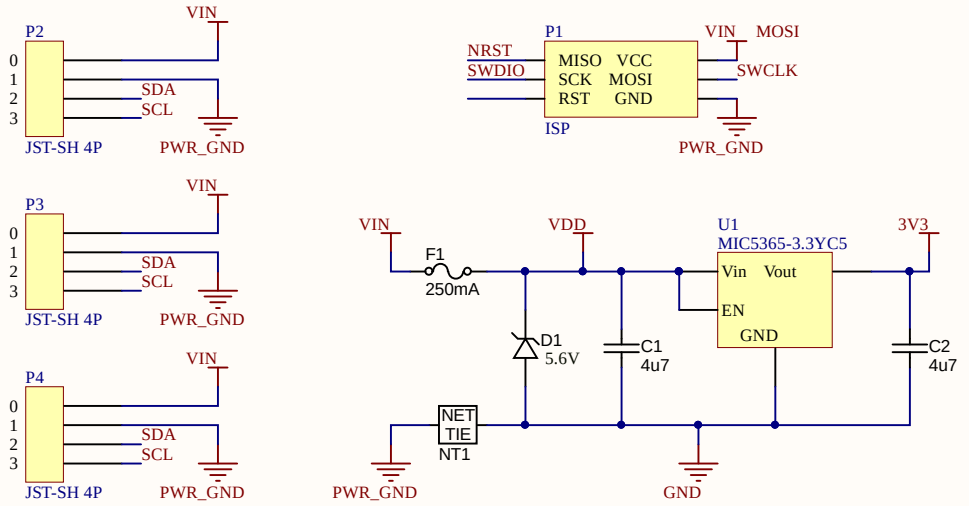

Microcontroller

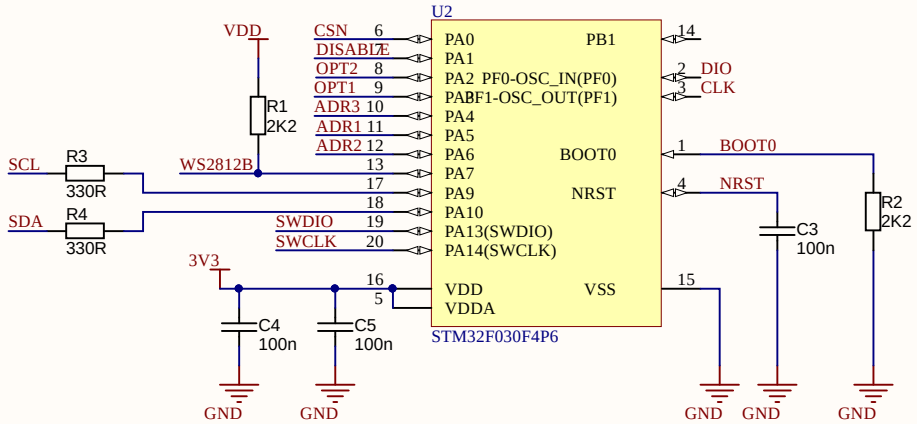

Status LEDs

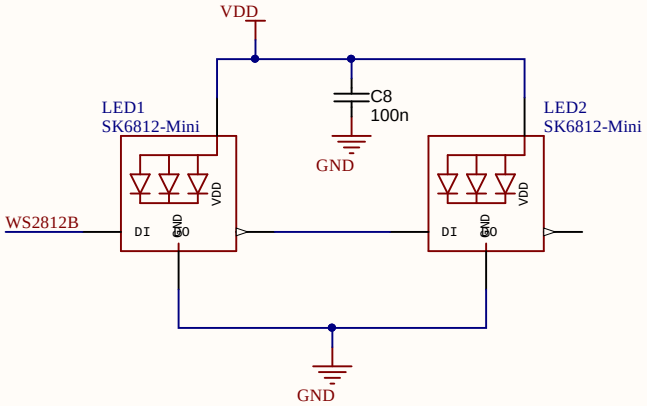

Magnetic Encoder

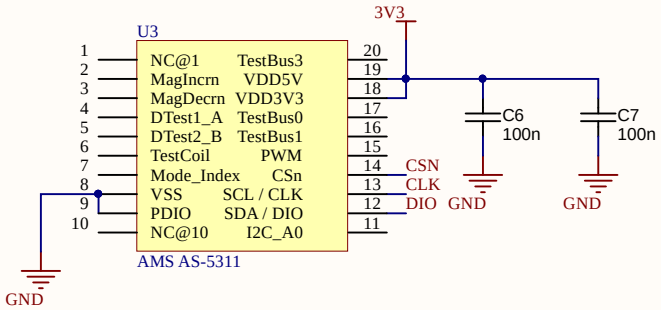

Configuration

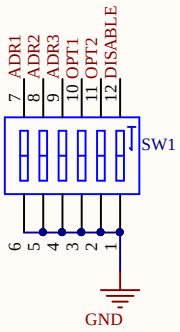

See documentation for switch configuration

Aus3D

GPLv3
https://github.com/Aus3D/MagneticEncoder

Drawn By: Chris Barr
Date: 30/5/2017
REV: 2.0A