Microcontroller

Pins in **BOLD** are interrupt-capable and will not collide with one another

Interrupt Allocation

INT00 -
INT01 - PB02 - BTN_EN1
INT02 - PB02 - BTN_EN2
INT03 -
INT04 -
INT05 - PC05 - KILL
INT06 -
INT07 - PE07 - BTN_ENC
INT08 - PD08 - Y-MAX
INT09 - PD09 - Z-MIN
INT10 - PD10 - Z-MAX
INT11
INT12 - PB12 - X-MIN
INT13 - PB13 - X-MAX
INT14 -
INT15 - PB15 - Y-MIN

ADC Allocation

THERM0 - ADC12_IN14
THERM1 - ADC123_IN13
THERM2 - ADC123_IN12
THERM3 - ADC123_IN11
THERM4 - ADC123_IN10
A9 - ADC123_IN4
A10 - ADC123_IN3

Reserved Pins

The following pins initialise to alternate functions with pull-up/pull-down on reset, and should be avoided as GPIO if possible:

Pin	-	Reset Behaviour
PA15	-	pull-up
PA14	-	pull-down
PA13	-	pull-up
PB4	-	pull-up
PB3	-	floating

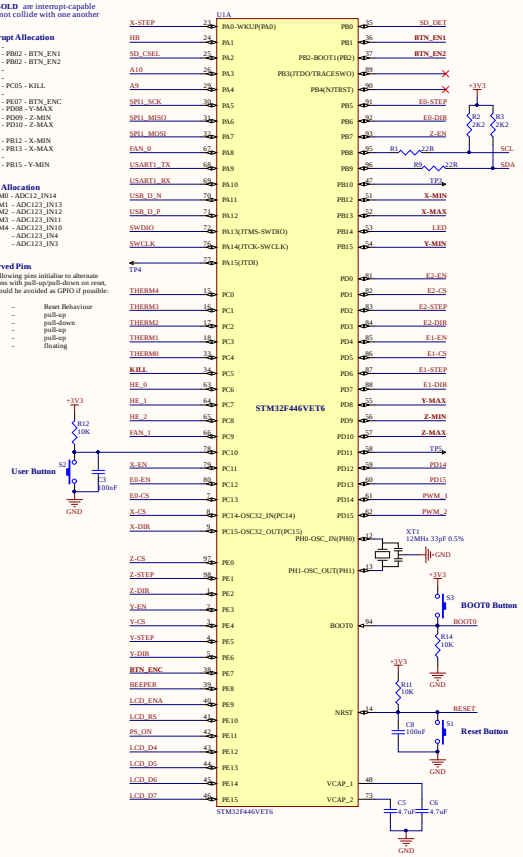

EEPROM

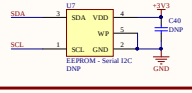

Aus3D

GPLv3
aus3d.com.au/rumba32
github.com/Aus3D/RUMBA32

Original RUMBA design by RepRapDiscount.com
Updated to RUMBA32 by Chris Barr for Aus3D
See the GitHub page for changelist

Date: 29/05/2019 REV: 1.0E

Thermistors

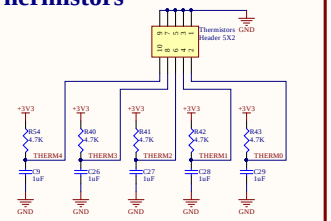

Endstops

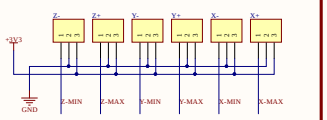

I2C

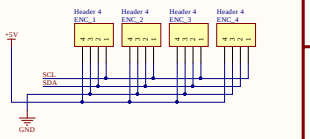

Auxiliary IO

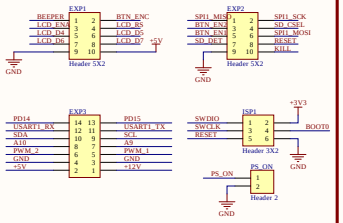

USB

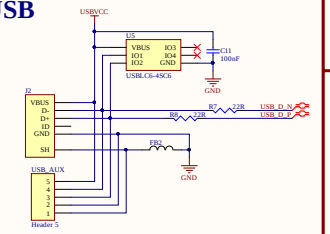

LEDs

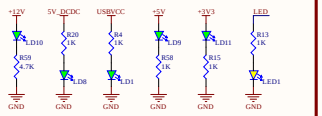

Stepper Drivers

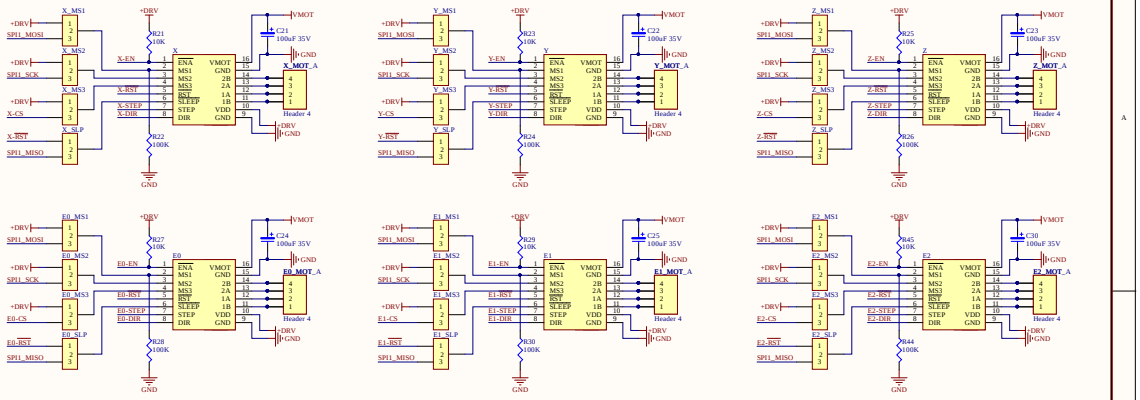

Four 3-way jumpers per driver allow selection and configuration of microstepping mode (A4988, DRV8825, TMC2100, etc.) or for SPI mode (TMC2130 etc.)

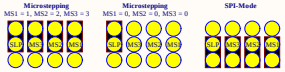

MOSFET Outputs

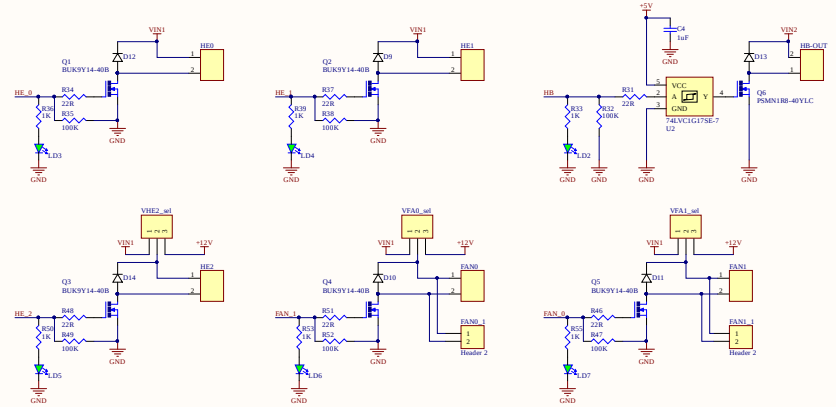

BED MOSFET Notes

PSMN1R8-40YLC RDSon (max) @ 4.5V = 2.1mΩ

Must be able to handle up to 20A.

P = I^2 x R
= 20^2 x 2.1mΩ
= 0.84W

Alternatives:
PSMN1R4-40YLDX (1.85mΩ)
PSMN1R0-40YLDX (1.40mΩ)

Other MOSFET Notes

BUK9Y14-40B RDSon (max) @ 3V = 15mΩ

Must be able to handle up to 5A.

P = I^2 x R
= 5^2 x 15mΩ
= .375W

Alternatives:
PSMN7R5-60YLX (9mΩ)
BUK9Y4R4-40E (6mΩ)

Power

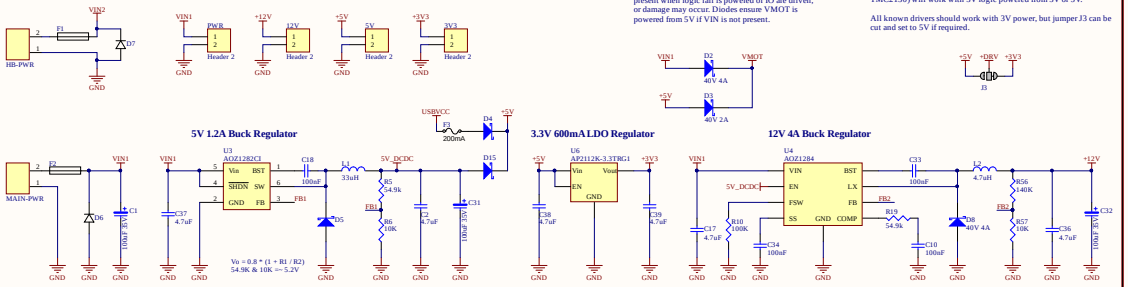

For TMC21X0 stepper drivers, VMOT must be present when logic tail is powered or IO are driven, or damage may occur. Diodes ensure VMOT is powered from 5V if VIN is not present.

Stepper drivers are provided with 3V power by default. Logic signals from microcontroller are 3V - some drivers (A4988) will only work with 3V logic when running on 3V power. Others (DRV8825, TMC2130) will work with 3V logic powered from 3V or 5V.

All known drivers should work with 3V power, but jumper J3 can be cut and set to 5V if required.