PIN \ DRV	X	Y	Z	E0	E1	E2
ENA	PC11	PE3	PB7	PC12	PD4	PD0
DIR	PC15	PE6	PE2	PB6	PD7	PD3
STEP	PA0	PE5	PE1	PB5	PD6	PD2
SPI_CS UART_RX	PC14	PE4	PE0	PC13	PD5	PD1
UART_TX	PA14	PA13	PB10	PD11	PB3	PB4
DIAG	PB12 (X-MIN)	PB15 (Y-MIN)	PD9 (Z-MIN)	PB13 (X-MAX)	PD8 (Y-MAX)	PD10 (Z-MAX)

EXP1

GND	PE14	PE12	PE9	PE8
+5V	PE15	PE13	PE10	PE7

EXP2

GND	PB0	PB1	PB2	PA6 MISO
PC5	RST	PA7 MOSI	PA2	PA5 SCK

PS_ON

GND	PE11

SWD

PA13 SWDIO	+3V3
PA14 SWCLK	BT0
RST	GND

ENDSTOPS

X-MIN	VSTP	GND	PB12
X-MAX	VSTP	GND	PB13
Y-MIN	VSTP	GND	PB15
Y-MAX	VSTP	GND	PD8
Z-MIN	VSTP	GND	PD9
Z-MAX	VSTP	GND	PD10

VSTP = 3.3V by default

SERVO

GND	+5V	PA15

I2C

+5V	GND	SDA	SCL
+5V	GND	SDA	SCL

PWR

GND
+3V3
GND
+5V
GND
+5VDC
GND
+12V
GND
+VIN1

THERMISTOR

T0	GND	PC4
T1	GND	PC3
T2	GND	PC2
T3	GND	PC1
TB	GND	PC0

USB

VBUS
DN
DP
GND
SHLD

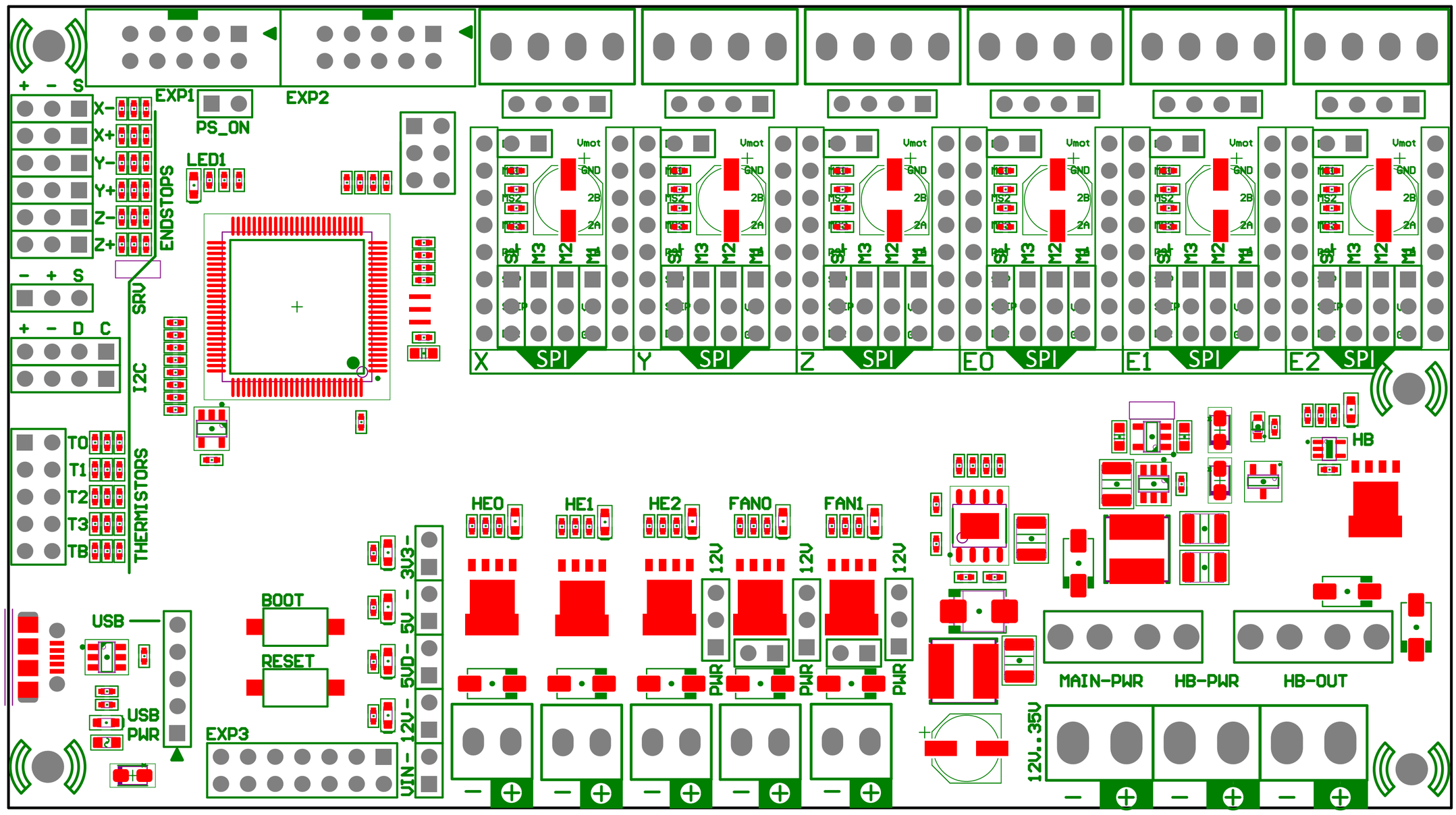

EXP3

PD13	PA9 U1TX	SCL	PA4	PD14	GND	+12V
PD12	PA10 U1RX	SDA	PA3	PD15	GND	+5V

HE0

PC6	+VIN1

HE1

PC7	+VIN1

HE2

PC8	+VIN1 or +12V (per jumper)

FAN0

PC9	+VIN1 or +12V (per jumper)

FAN1

PA8	+VIN1 or +12V (per jumper)

+12V
<-
+VIN1

MAIN-PWR

GND	+VIN1

HB-PWR

GND	+VIN2

HB

PA1	+VIN2