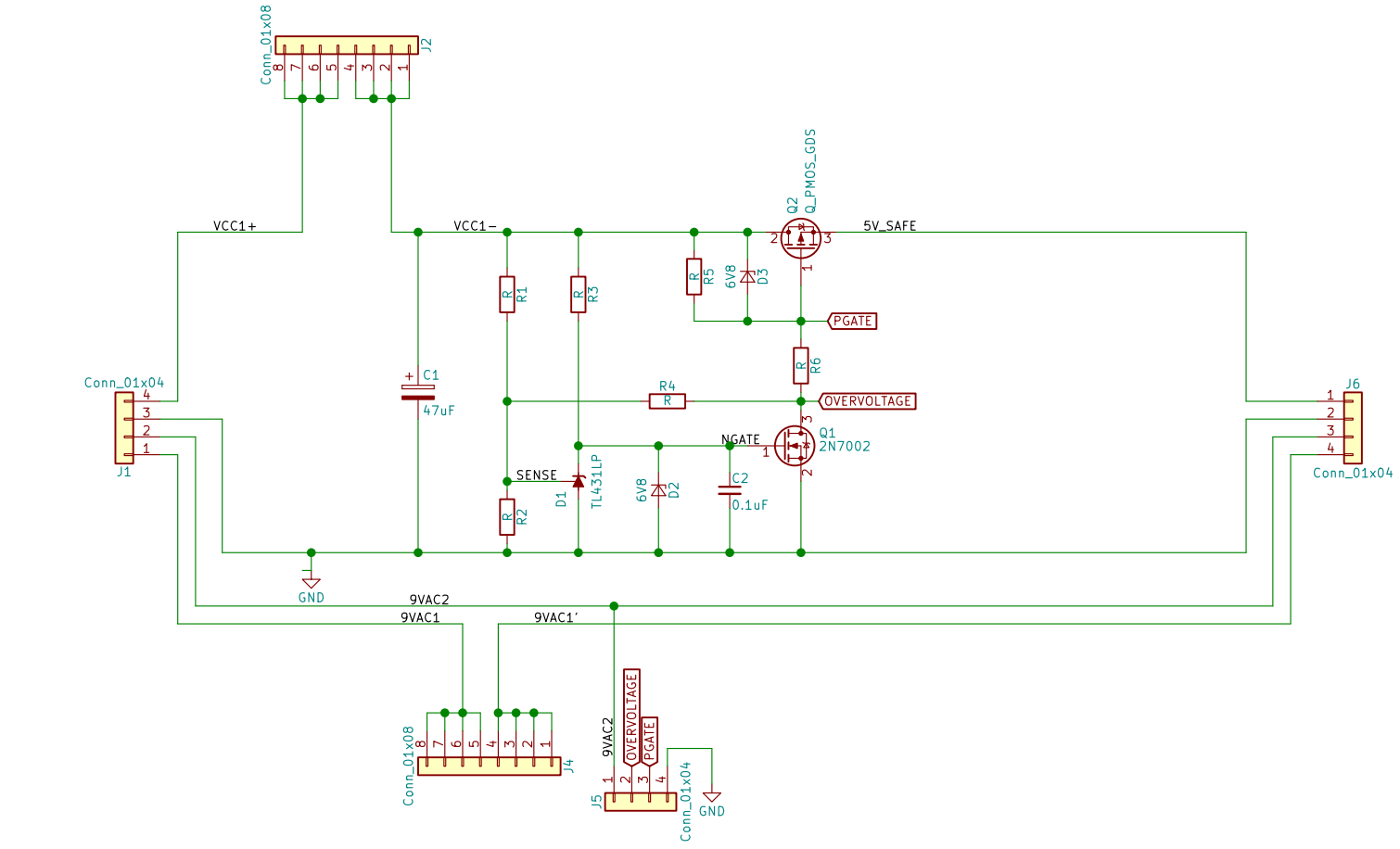

MK1
Mounting_Hole

MK2
Mounting_Hole

Sheet: /
File: C64Saver2.sch

Title: C64 Saver

Size: A4	Date: 2018-07-23	Rev: 2.1
KiCad E.D.A. kicad 4.0.7		Id: 1/1