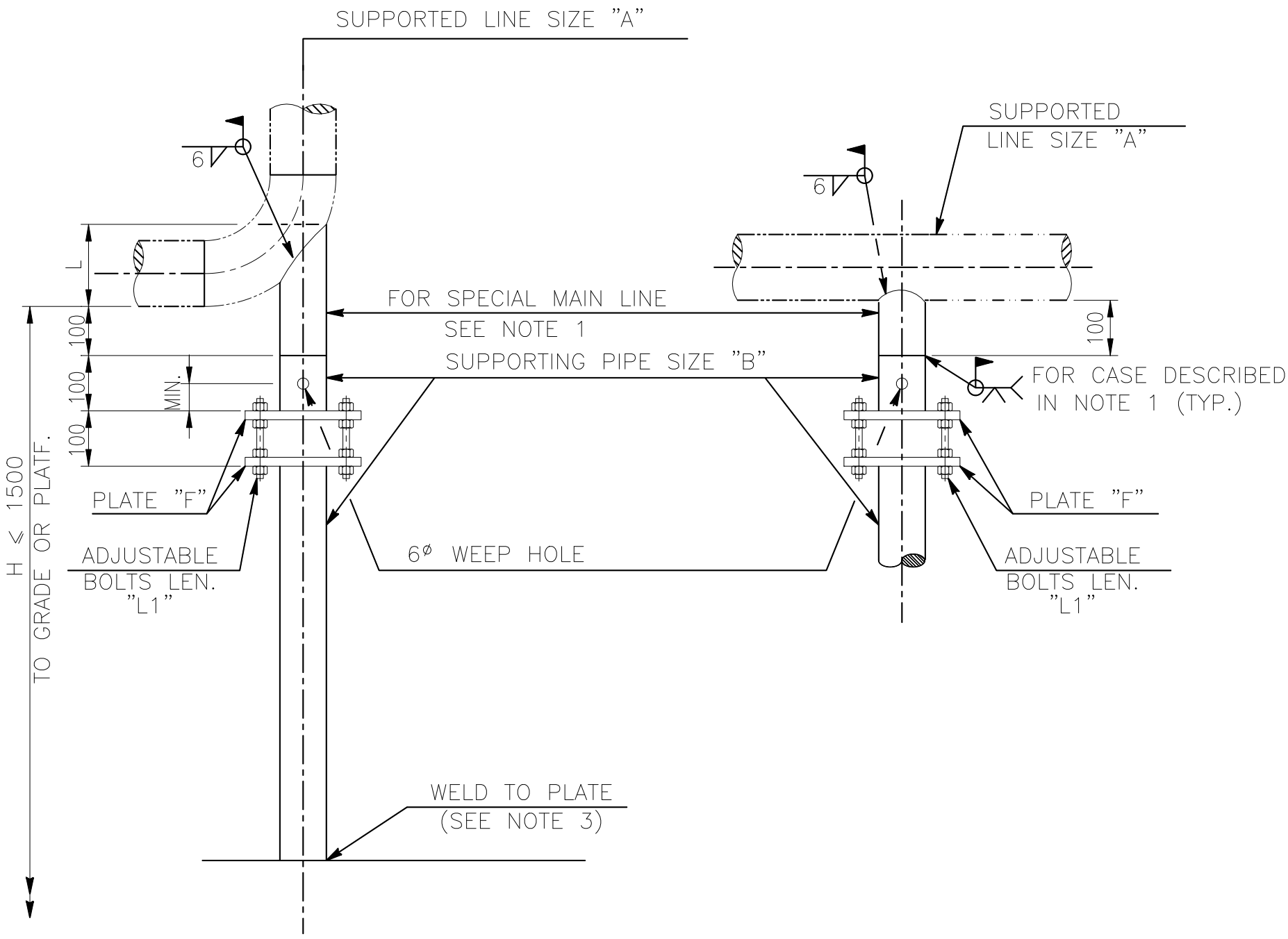

ELEV.

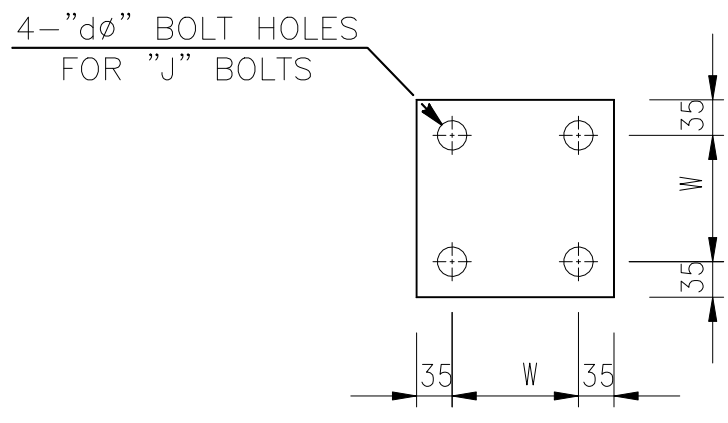

PLATE "F"

中威工程顧問股份有限公司 CHUNG WEI ENGINEERING CONSULTING CO., LTD.						DETAIL OF PIPE SUPPORT TYPE-10	ENGINEERING STANDARD E1906-DSP-500-006
BY	SHIH		CHK.	YANG			
DATE	12/12/'19		APPR.	CHEN			D-10 / REV. 0

FILE: D-10M.DWG

DIMENSION (mm)

LINE SIZE "A"	PIPE SIZE "B"	L (NOTE 5)	PLATE F	ADJ. BOLT J x L1	W	dØ
1.1/2"	1.1/2" SCH.80	81	₱9tx170x170	M12x160L	100	15
2"	1.1/2" SCH.80	71	₱9tx170x170	M12x160L	100	15
2.1/2"	2" SCH.40	91	₱9tx200x200	M12x160L	130	15
3"	2" SCH.40	93	₱9tx200x200	M12x160L	130	15
4"	3" SCH.40	138	₱12tx230x230	M16x180L	160	19
5"	4" SCH.40	178	₱12tx260x260	M16x180L	190	19
6"	4" SCH.40	186	₱12tx260x260	M16x180L	190	19
8"	6" SCH.40	272	₱12tx330x330	M16x180L	260	19
10"	6" SCH.40	291	₱12tx330x330	M16x180L	260	19
12"	8" SCH.40	370	₱16tx400x400	M16x180L	330	19
14"	8" SCH.40	407	₱16tx400x400	M16x180L	330	19
16"	8" SCH.40	434	₱16tx400x400	M16x180L	330	19
18"	10" SCH.40	515	₱16tx440x440	M16x180L	370	19
20"	10" SCH.40	542	₱16tx440x440	M16x180L	370	19
28"	18" STD.WT	835	₱19tx520x520	M20x180L	450	23
32"	18" STD.WT	886	₱19tx520x520	M20x180L	450	23
36"	24" STD.WT	1098	₱19tx670x670	M20x180L	600	23
44"	24" STD.WT	1200	₱19tx670x670	M20x180L	600	23

NOTES :

1. FOR ALLOY STEEL, STAINLESS STEEL & STRESS RELIEF LINES, THE MATERIALS SHALL BE THE SAME AS MAIN LINES.
2. DIMENSION "H" SHALL BE CUT TO SUIT IN FIELD.
3. THIS TYPE SHALL BE USED WITH M-42 TO DETERMINE THE LOWER COMPONENT TYPE.
4. DESIGNATION NUMBER DENOTE AS FOLLOWS :

   10-6B-05B
   - 05B — DENOTE THE LOWER COMPONENT TYPE SEE M-42
   - 05B — DENOTE DIMENSION "H" (IN 100mm)
   - 6B — DENOTE SUPPORTED LINE SIZE "A"
   - 10 — DENOTE TYPE NO.
5. DIMENSION "L" IS BASED ON LONG RADIUS ELBOW TO WHICH DUMMY PIPE IS WELDED.
6. THIS SUPPORT SHALL NOT BE USED IN THE FOLLOWING CONDITIONS:
   A. DESIGN TEMPERATURE≤10° OR ≥400°
   B. DESIGN PRESSURE≥70Kg/cm² G

中威工程顧問股份有限公司 CHUNG WEI ENGINEERING CONSULTING CO., LTD.						DETAIL OF PIPE SUPPORT TYPE-10	ENGINEERING STANDARD E1906-DSP-500-006
BY	SHIH		CHK.	YANG			D-10A REV. 0
DATE	12/12/'19		APPR.	CHEN			

FILE:D-10MA.DWG