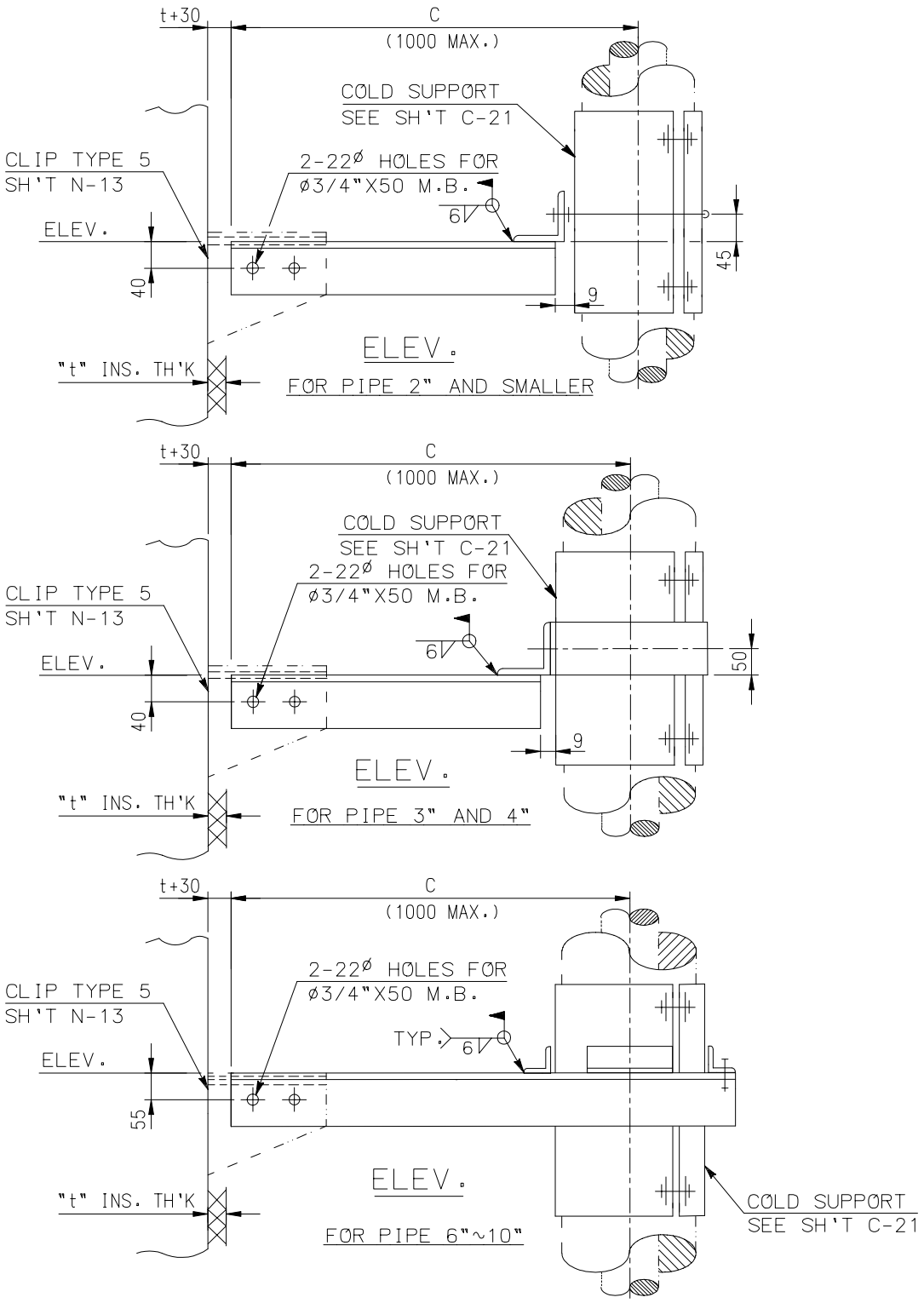

NOTES:

1. DESIGNATION NUMBER DENOTE AS FOLLOWS :

114C-A-CR9-2B-500

- DENOTE DIM. "C"(IN MM)
- DENOTE PIPE SIZE
- DENOTE CRADLE NO. (NOTE 2)
- DENOTE CRADLE LENGTH (SEE SH'T C-24)
- DENOTE TYPE NO.

2. DIMENSION ''F'' AND CRADLE NO. ARE FUNCTIONS OF INSULATION SIZE, SEE SHEETS N-20 TO N-23.

3. DIM. B = F + 13.

中威工程顧問股份有限公司 CHUNG WEI ENGINEERING CONSULTING CO., LTD.				DETAIL OF COLD SUPPORT TYPE-114C (1 OF 3)	ENGINEERING STANDARD		
BY			CHK.			DSP-500-006	
DATE			APPR.			C-57	REV. 0

FILE: C-57M.DWG

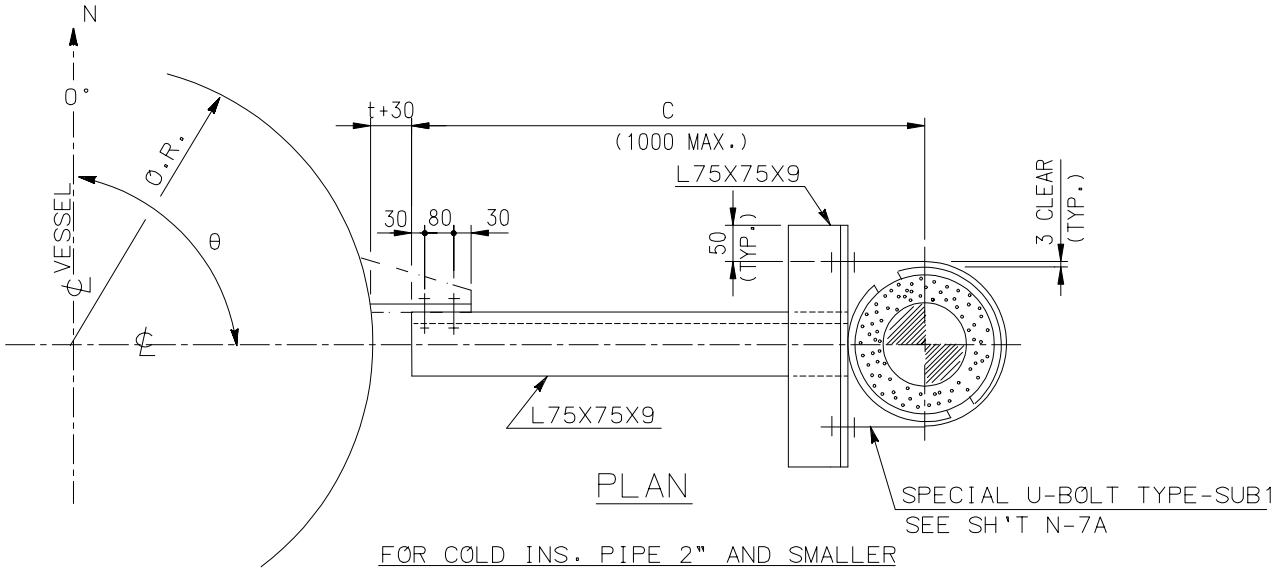

PLAN

FOR COLD INS. PIPE 2" AND SMALLER

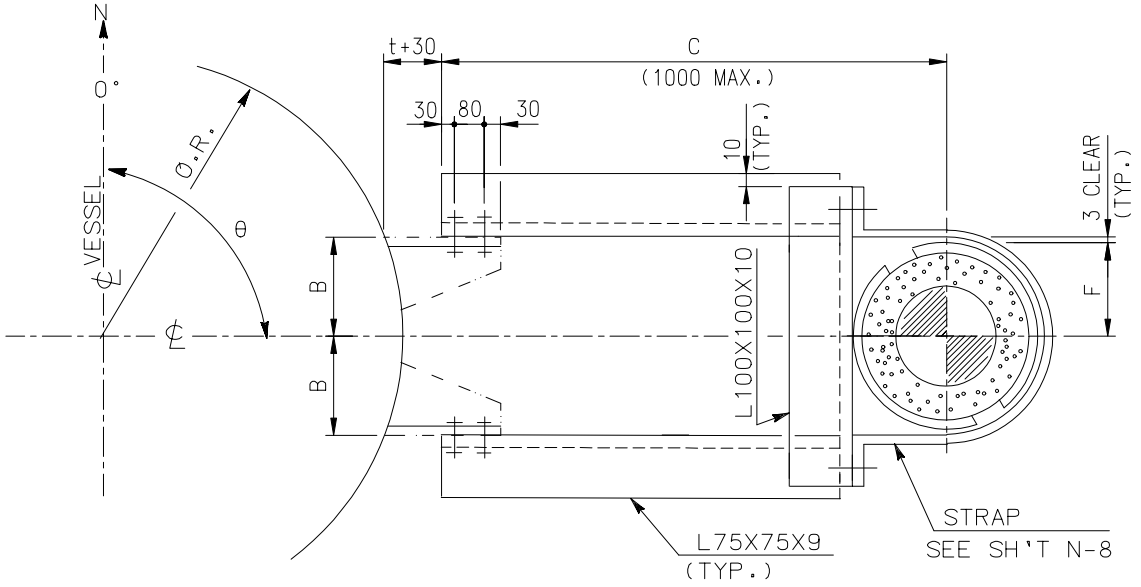

PLAN

FOR COLD INS. PIPE 3" AND 4"

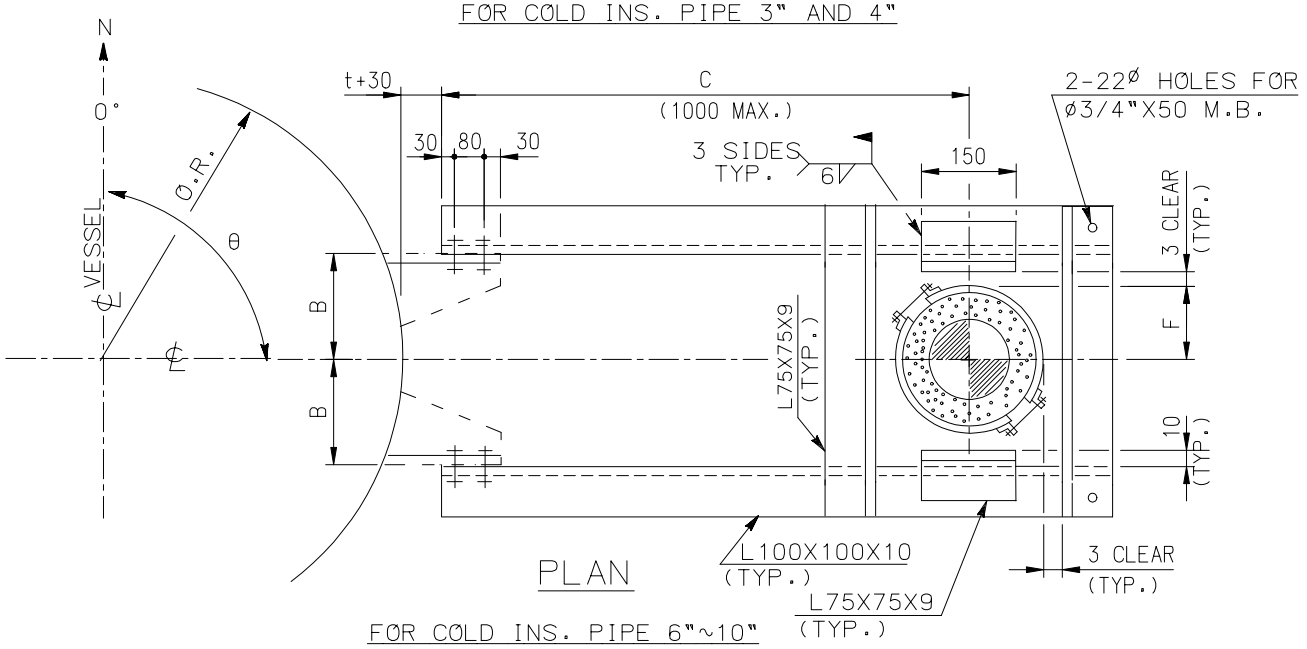

PLAN

FOR COLD INS. PIPE 6"~10"

中威工程顧問股份有限公司 CHUNG WEI ENGINEERING CONSULTING CO., LTD.					DETAIL OF COLD SUPPORT TYPE-114C (2 OF 3)	ENGINEERING STANDARD DSP-500-006	
BY			CHK.			C-58	REV. 0
DATE			APPR.				

FILE: C-58M.DWG

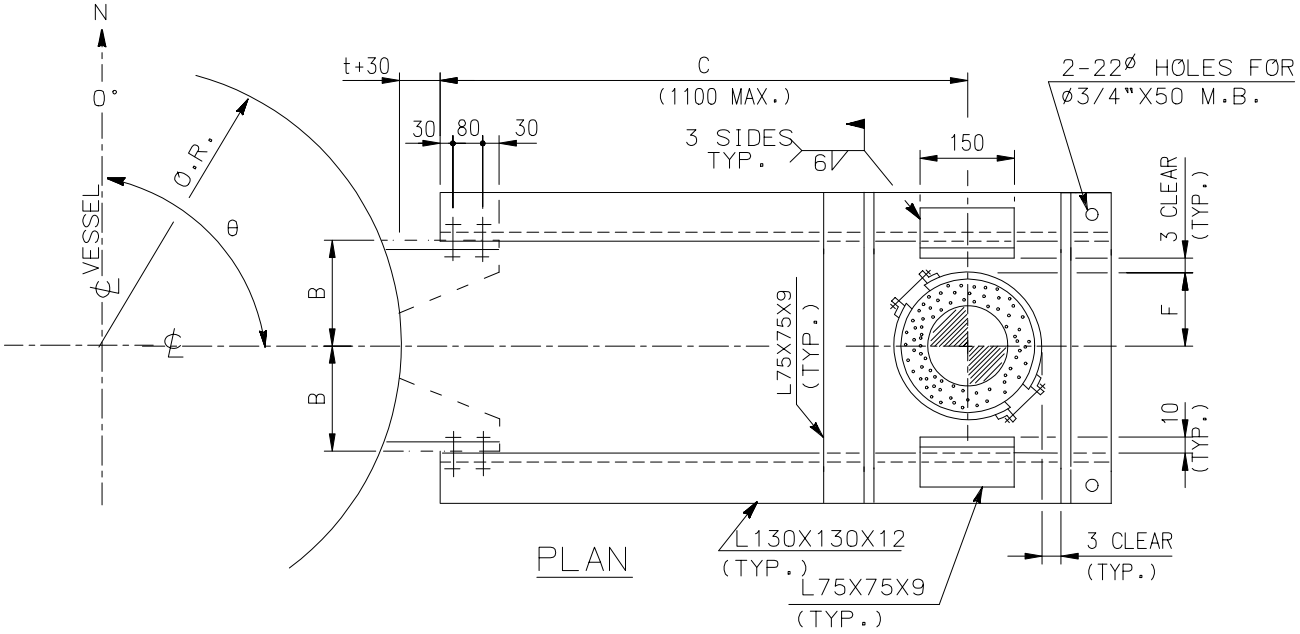

FOR COLD INS. PIPE 12"~24"

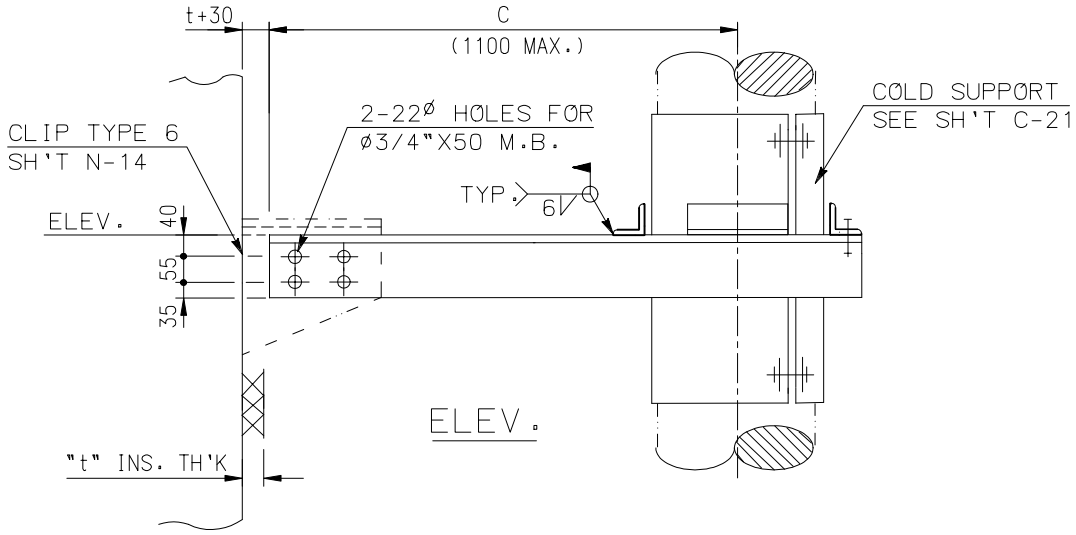

FOR COLD INS. PIPE 12"~24"

中威工程顧問股份有限公司 CHUNG WEI ENGINEERING CONSULTING CO., LTD.					DETAIL OF COLD SUPPORT TYPE-114C (3 OF 3)	ENGINEERING STANDARD DSP-500-006	
BY			CHK.			C-59	REV. 0
DATE			APPR.				

FILE: C-59M.DWG