TRAPEZE : FOR PIPE 30" & LARGER

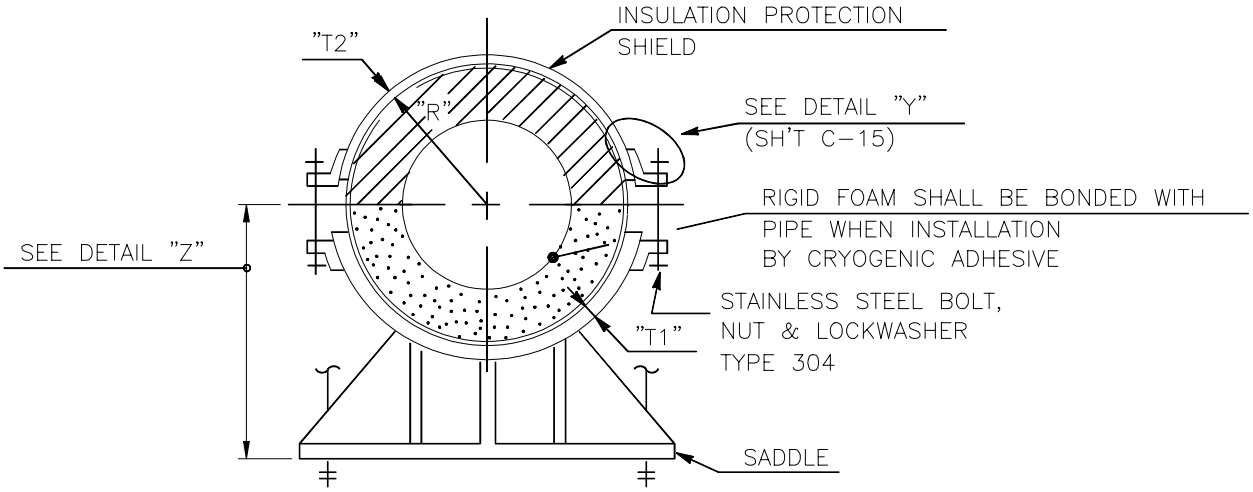

TYPE "14C" SUPPORT

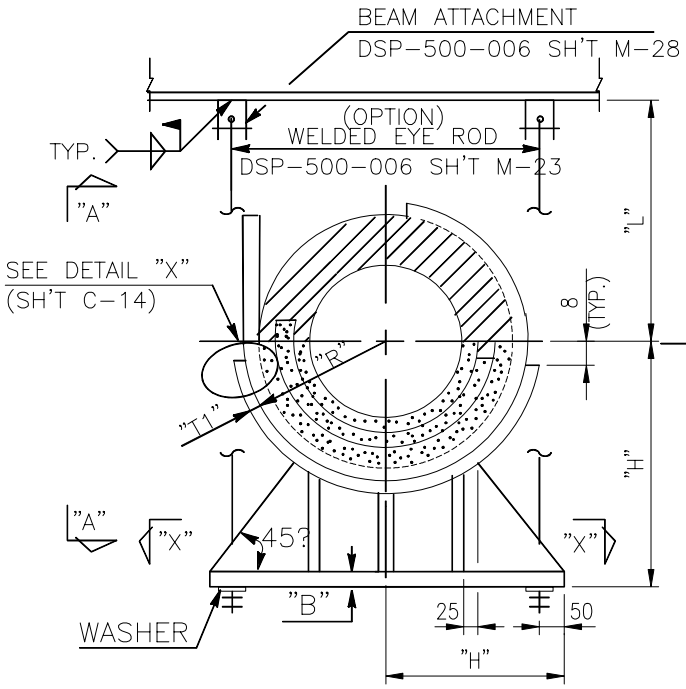

DETAIL "Z"
(3 LAYER CONSTR.)

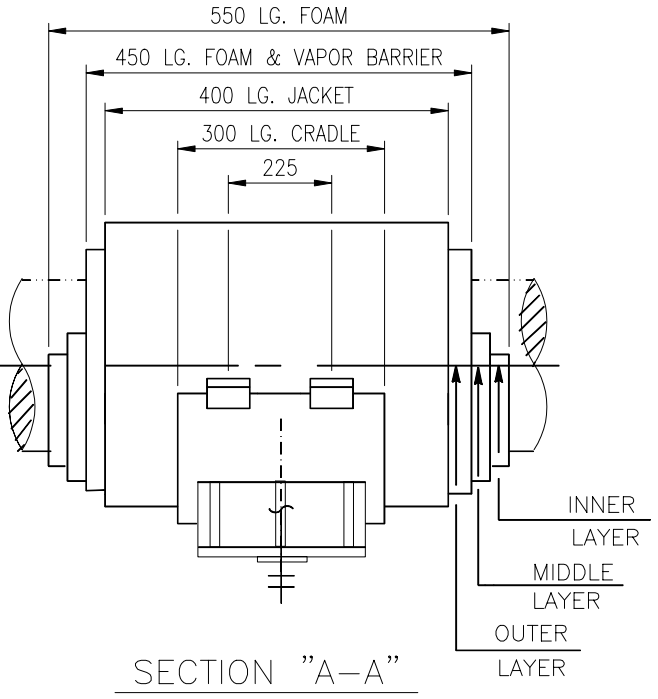

SECTION "A-A"

NOTES:

1. REFERENCE SHEETS OF TYPE "14C" SUPPORT:

ITEM	SHEET NO.
DIM. "T1", "R", "B"	N1
DIM. "T2"	N4
DIM. "H", CRADLE NO.	N24 TO N26
LAYER TH'K OF COLD SUPPORT	N2
SINGLE & DOUBLE LAYER CONSTRUCTION OF COLD SUPPORT	N3
DESIGN DATA OF MOLDED POLYURETHANE	N5

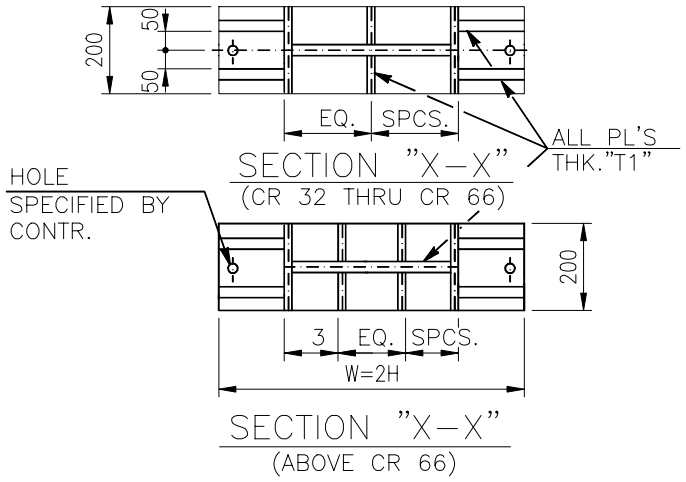

SECTION "X-X"
(CR 32 THRU CR 66)

SECTION "X-X"
(ABOVE CR 66)

中威工程顧問股份有限公司 CHUNG WEI ENGINEERING CONSULTING CO., LTD.					DETAIL OF COLD SUPPORT TYPE-14C (1 OF 2)	ENGINEERING STANDARD DSP-500-006	
BY			CHK.			C-19	REV. 0
DATE			APPR.				

FILE: C-19M.DWG

NOTES: (CONTINUED)

2. FOR DETAILS & INFORMATION NOT SHOWN ON THIS DWG. SEE SHEETS C-14. & C-15.

3. DESIGNAION NUMBER DENOTE AS FOLLOWS :

14C-CR32-30B-1 1/2 -250

- 250 — DENOTE DIMENSION "L" (IN MM)
- 1 1/2 — DENOTE ROD SIZE
- 30B — DENOTE PIPE SIZE
- CR32 — DENOTE CRADLE NUMBER
- 14C — DENOTE TYPE NO.

中威工程顧問股份有限公司 CHUNG WEI ENGINEERING CONSULTING CO., LTD.					DETAIL OF COLD SUPPORT TYPE-14C (2 OF 2)	ENGINEERING STANDARD DSP-500-006	
BY			CHK.			C-20	REV. 0
DATE			APPR.				

FILE: C-20M.DWG