GUIDE FOR HORIZONTAL PIPE SIZE 24" & SMALLER (CR 2.5 TO CR 12)

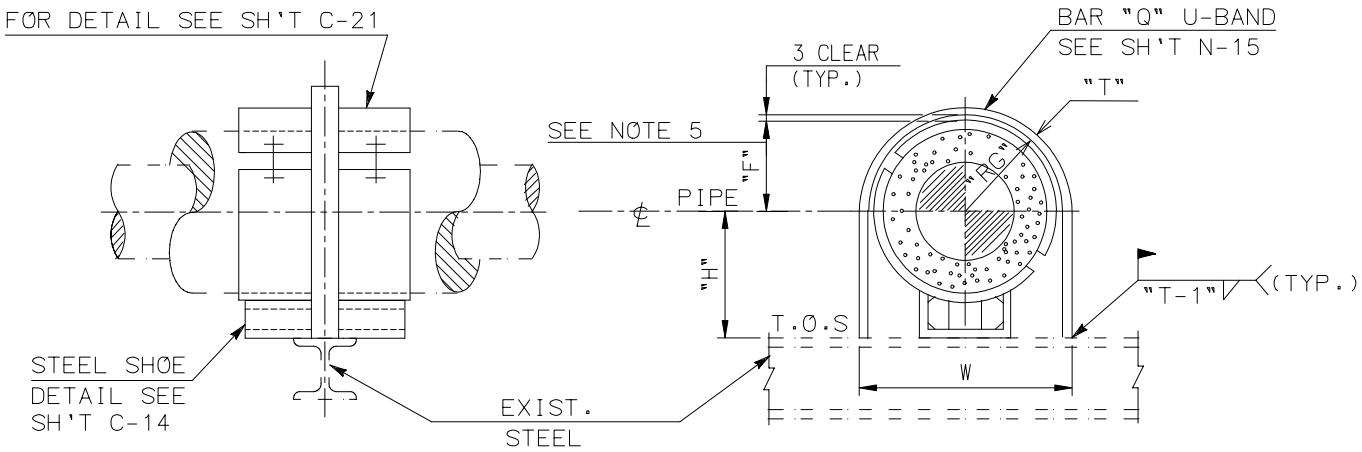

ELEVATION

STANDARD GUIDE FOR HORIZONTAL COLD INSULATION SUPPORTS				
CRADLE NO.	BAR "Q"	"RG"	"H"	"W"
CR2.5	50X 6	42	79	96
CR3	50X 6	50	87	112
CR3.5	50X 6	57	94	126
CR4	50X 6	63	100	138
CR4.5	50X 6	70	107	152
CR5	50X 6	76	113	172
CR6	50X 6	92	129	204
CR7	75X10	105	142	230
CR8	75X10	117	154	254
CR9	75X10	130	167	280
CR10	75X10	146	183	312
CR11	75X10	158	195	336
CR12	75X10	171	208	362

NOTES:

1. ALL DIMENSIONS ARE IN MILLIMETERS
2. DIMENSION W=2(RG+T) WHERE: RG=INSIDE BENDING RADIUS OF BAR "Q"
   T=THICKNESS OF BAR "Q"
3. DESIGNATION NUMBER DENOTE AS FOLLOWS :

   17C-A-CR8-4B-G
   - G — DENOTE GUIDE MEMBER "Q" ARE REQUIRED
   - 4B — DENOTE PIPE SIZE
   - CR8 — DENOTE CRADLE NO.(SEE NOTE 5)
   - A — DENOTE CRADLE LENGTH FOR "A" OR "B" ONLY (SEE SH'T C-14)
   - 17C — DENOTE TYPE NO.
4. FOR CONTINUATION SEE SHEETS C-24 & C-25
5. DIMENSIONS "F" AND CRADLE NUMBER ARE FUNCTION OF INSULATION THICKNESS SEE SHEETS N-20 TO N-23.

中威工程顧問股份有限公司 CHUNG WEI ENGINEERING CONSULTING CO., LTD.					DETAIL OF COLD SUPPORT TYPE-17C (1 OF 3)	ENGINEERING STANDARD DSP-500-006	
BY			CHK.			C-23	REV. 0
DATE			APPR.				

FILE: C-23M.DWG

GUIDE FOR HORIZONTAL PIPE SIZE 24" & SMALLER (CR 14 TO CR 25)

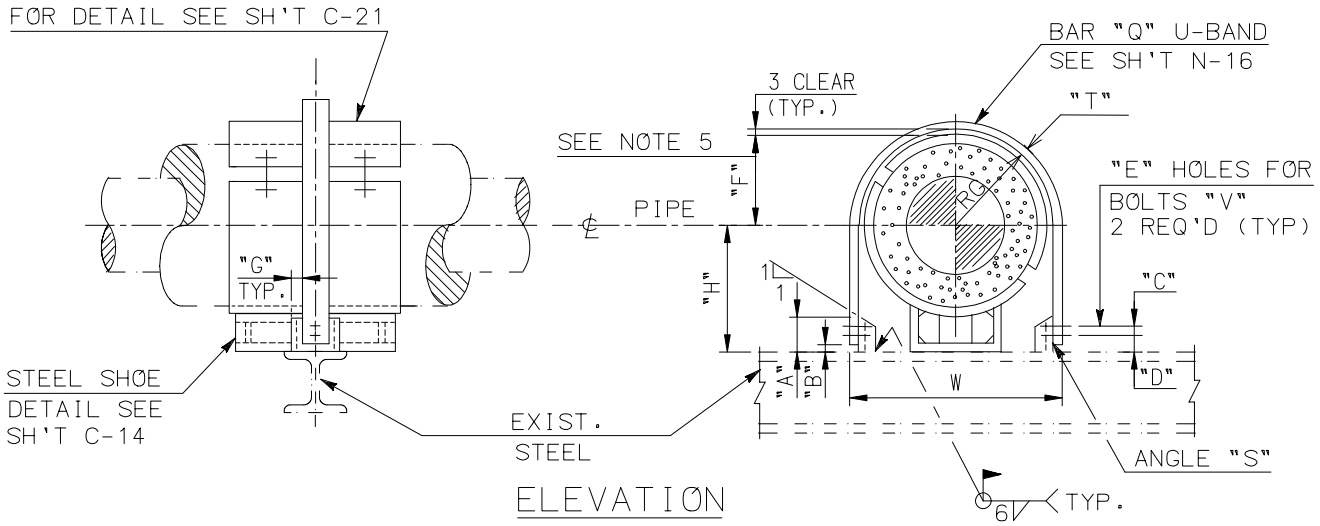

STANDARD GUIDE FOR HORIZONTAL COLD INSULATION SUPPORT											
CRADLE NO.	BAR "Q"	DIMENSIONS							ANGLE REINFORCEMENT DATA		
		"RG"	"H"	"A"	"B"	"C"	"D"	"G"	ANGLE "S"	HOLE "E"	BOLTS "V"
CR14	75X12	187	224	130	10	60	30	30	65X 65X 6	ø15	1/2"X45
CR15	75X12	200	237	135	10	60	30	30	65X 65X 6	ø15	1/2"X45
CR16	75X12	213	249	140	10	70	30	40	75X 75X 9	ø15	1/2"X45
CR17	75X12	225	262	150	10	80	30	40	75X 75X 9	ø15	1/2"X45
CR18	90X12	238	275	155	10	80	40	40	75X 75X 9	ø15	1/2"X45
CR19	90X12	251	287	160	10	80	40	40	75X 75X 9	ø15	1/2"X45
CR20	90X16	267	304	170	10	90	40	40	75X 75X 9	ø19	5/8"X50
CR21	90X16	279	316	175	10	90	40	55	100X100X10	ø19	5/8"X50
CR22	100X16	292	329	180	10	90	50	55	100X100X10	ø19	5/8"X50
CR23	100X16	305	342	185	10	90	50	55	100X100X10	ø19	5/8"X50
CR24	100X16	318	354	190	10	90	50	55	100X100X10	ø19	5/8"X50
CR25	100X16	330	367	200	10	100	50	55	100X100X10	ø19	5/8"X50

GUIDE FOR HORIZONTAL PIPE SIZE 24" & SMALLER
(CR 26 TO CR 40)

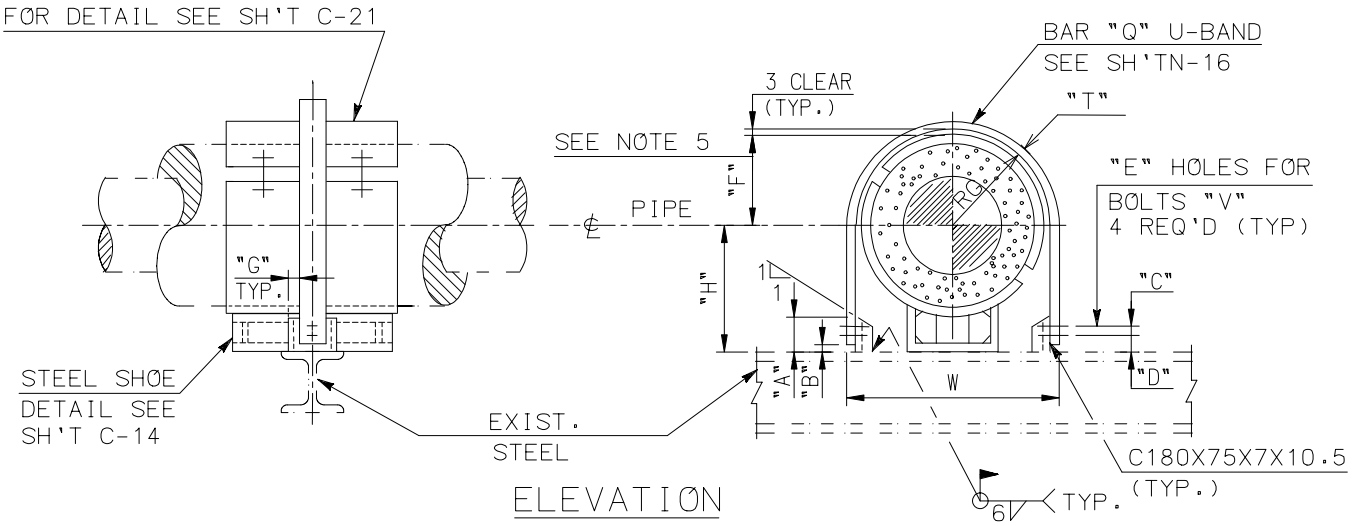

ELEVATION

STANDARD GUIDE FOR HORIZONTAL COLD INSULATION SUPPORTS										
CRADLE NO.	BAR "Q"	DIMENSIONS							REINFORCEMENT DATA	
		"RG"	"H"	"A"	"B"	"C"	"D"	"G"	HOLES "E"	BOLTS "V"
CR26	130 X 20	343	360	205	10	105	50	25	ø19	5/8"X55
CR27	130 X 20	356	392	210	10	110	50	25	ø19	5/8"X55
CR28	130 X 20	368	405	220	10	120	50	25	ø19	5/8"X55
CR29	130 X 20	381	418	225	10	125	50	25	ø19	5/8"X55
CR30	130 X 25	394	431	230	10	130	50	25	ø19	5/8"X60
CR31	130 X 25	410	446	235	10	135	50	25	ø19	5/8"X60
CR32	130 X 25	422	459	245	10	145	50	25	ø19	5/8"X60
CR33	130 X 25	435	471	250	10	150	50	25	ø19	5/8"X60
CR34	130 X 25	448	495	255	10	155	50	25	ø19	5/8"X60
CR35	130 X 25	460	497	260	10	160	50	25	ø19	5/8"X60
CR36	130 X 25	473	510	265	10	165	50	25	ø19	5/8"X60
CR37	130 X 25	486	523	275	10	175	50	25	ø19	5/8"X60
CR38	130 X 25	498	535	280	10	180	50	25	ø19	5/8"X60
CR39	130 X 25	511	548	285	10	185	50	25	ø19	5/8"X60
CR40	130 X 25	524	561	290	10	190	50	25	ø19	5/8"X60