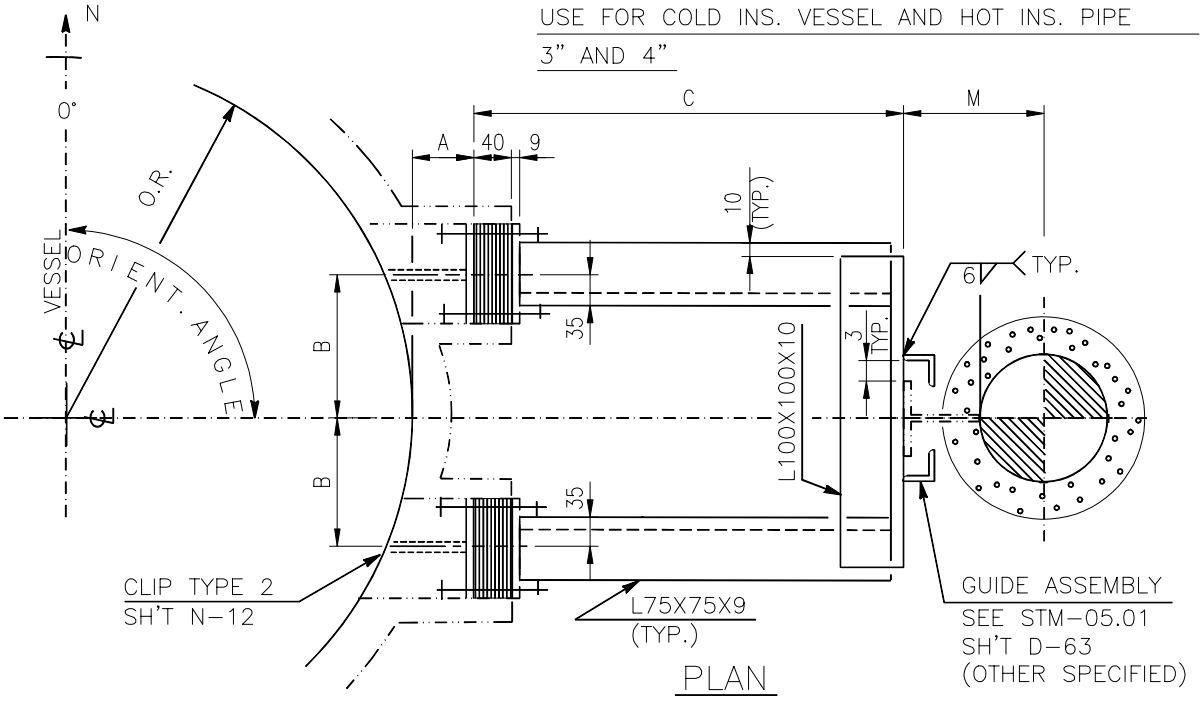

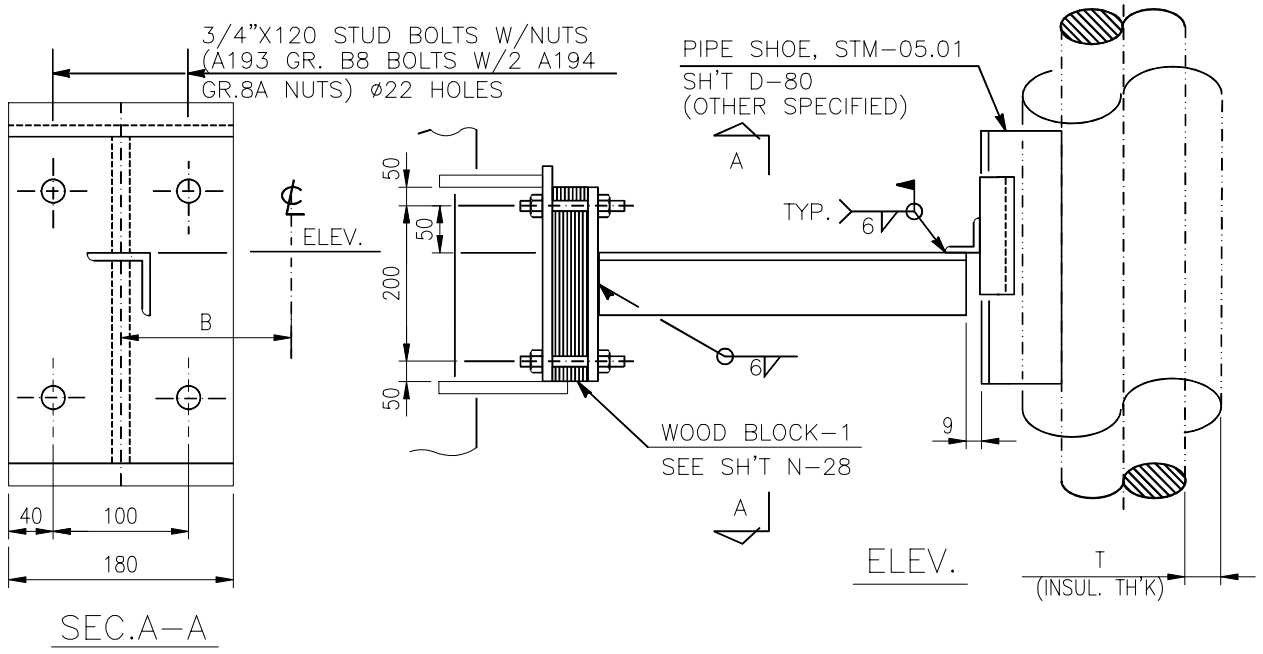

NOTES:

1. DESIGNATION NUMBER DENOTE AS FOLLOWS:

   21C-3B-500-100

   - 100 — DENOTE HEIGHT OF SHOE "M" (IN MM)
   - 500 — DENOTE DIM. "C" (IN MM)
   - 3B — DENOTE LINE SIZE
   - 21C — DENOTE TYPE NO.

2. DIM. A, SEE NOTE 2 OF SHEET N-12A.

中威工程顧問股份有限公司 CHUNG WEI ENGINEERING CONSULTING CO., LTD.				DETAIL OF COLD SUPPORT TYPE-21C (1 OF 3)	ENGINEERING STANDARD DSP-500-006	
BY			CHK.		C-32	REV. 0
DATE			APPR.			

FILE: C-32M.DWG

USE FOR COLD INS. VESSEL AND HOT INS. PIPE
6", 8" AND 10"

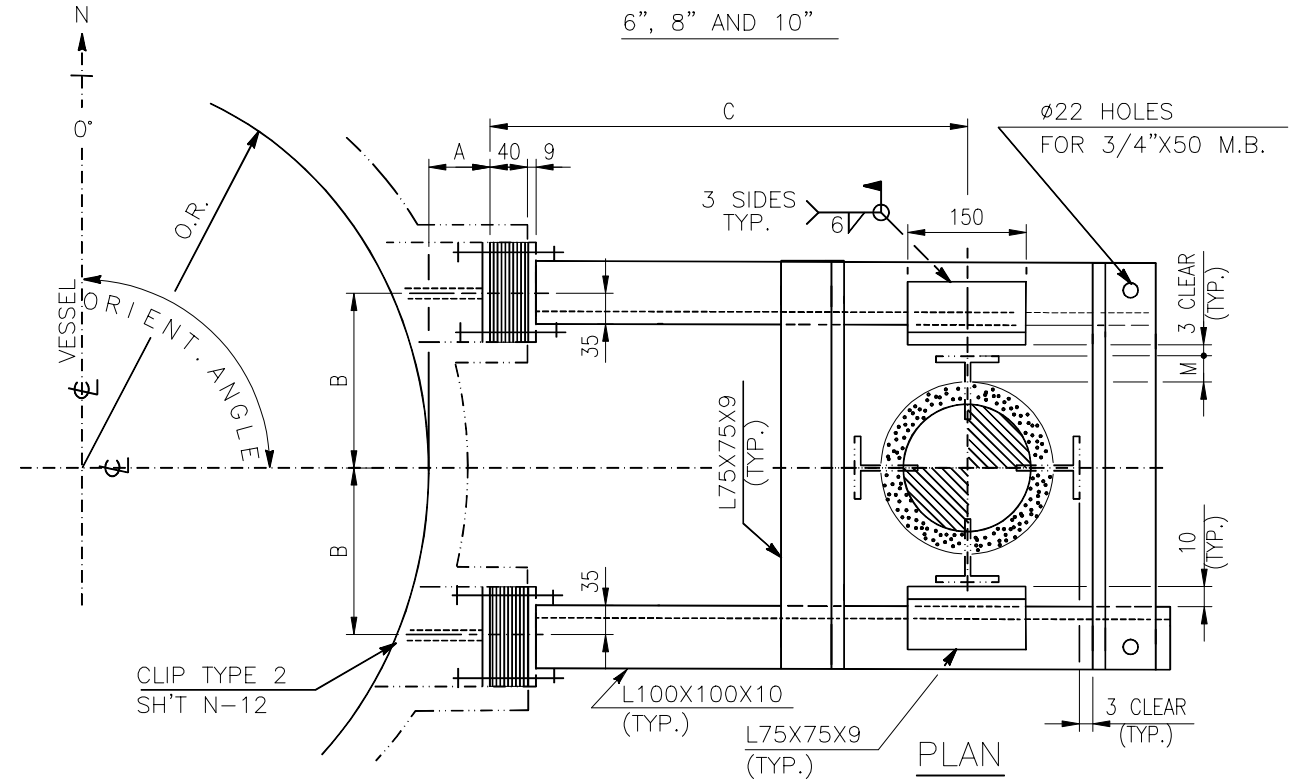

PLAN

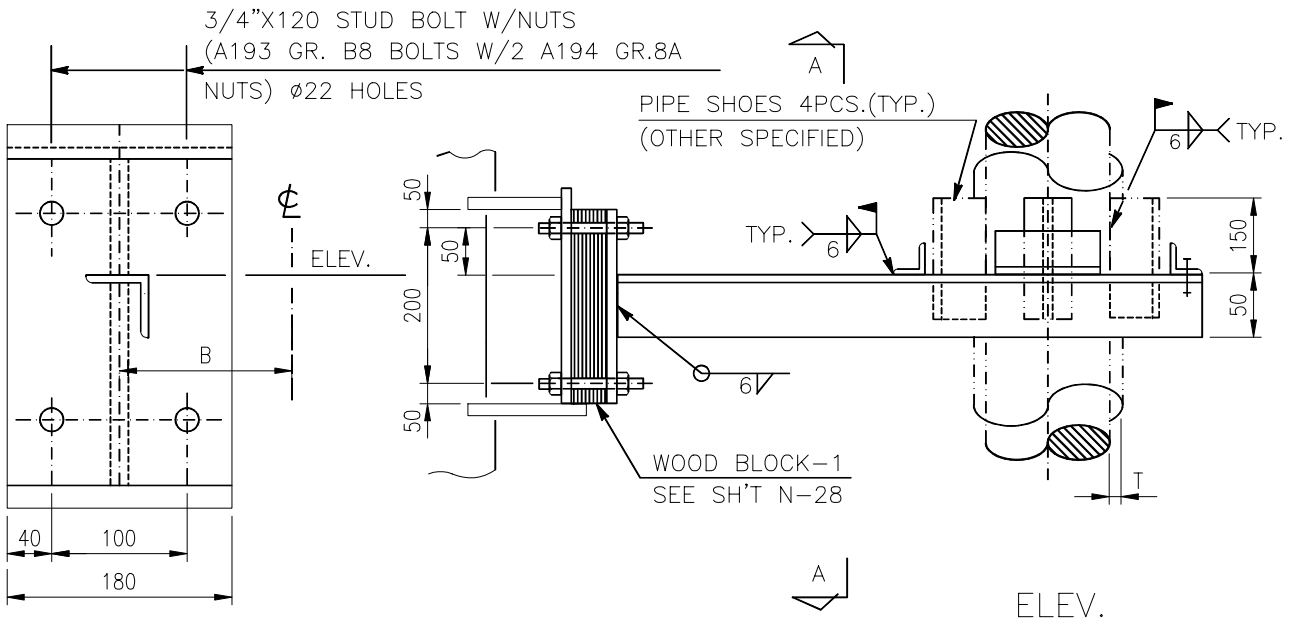

SEC.A-A

ELEV.

NOTES:

1. FOR MARK NO. OF SUPPORT, SEE SHEET C-32 NOTE 1.
2. B = OD/2 + M + 48
3. DIM.A, SEE NOTE 2 OF SHEET N-12A

中威工程顧問股份有限公司 CHUNG WEI ENGINEERING CONSULTING CO., LTD.					DETAIL OF COLD SUPPORT TYPE-21C (2 OF 3)	ENGINEERING STANDARD DSP-500-006	
BY			CHK.			C-33	REV. 0
DATE			APPR.				

FILE: C-33M.DWG

USE FOR COLD INS. VESSEL AND HOT INS. PIPE
12"~24"

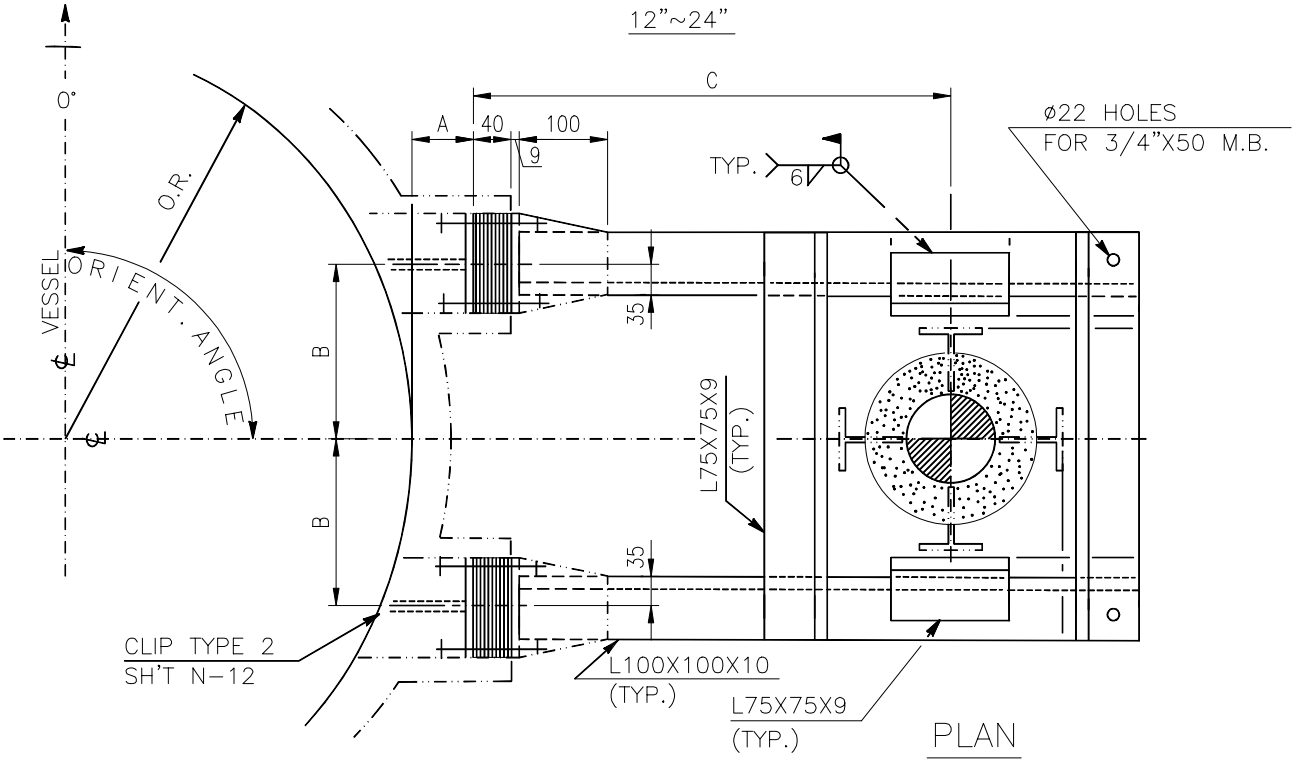

PLAN

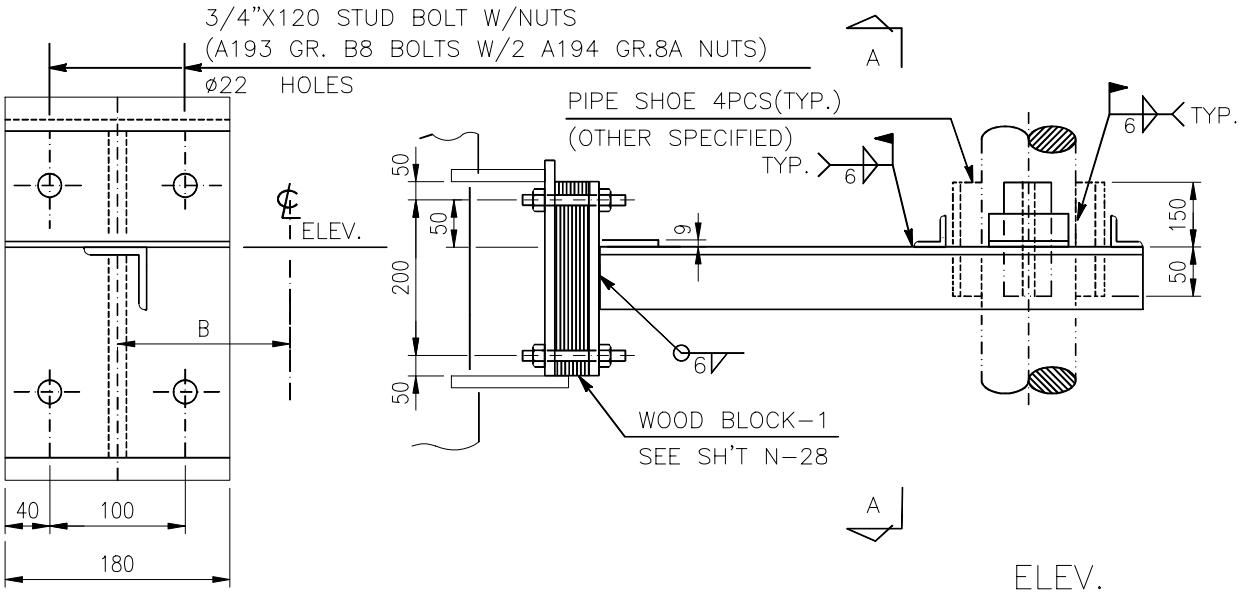

SEC.A-A

ELEV.

NOTES:

1. FOR MARK NO. OF SUPPORT, SEE SHEET C-32 NOTE 1.
2. FOR DIMENSIONS "B", SEE SHEET C-33 NOTE 2.
3. DIM. A, SEE NOTE 2 OF SHEET N-12A

中威工程顧問股份有限公司 CHUNG WEI ENGINEERING CONSULTING CO., LTD.				DETAIL OF COLD SUPPORT TYPE-21C (3 OF 3)	ENGINEERING STANDARD		
BY			CHK.		DSP-500-006		
DATE			APPR.		C-34	REV. 0	

FILE: C-34M.DWG