USE FOR COLD INS. VESSEL AND COLD INS. PIPE 2" AND SMALLER

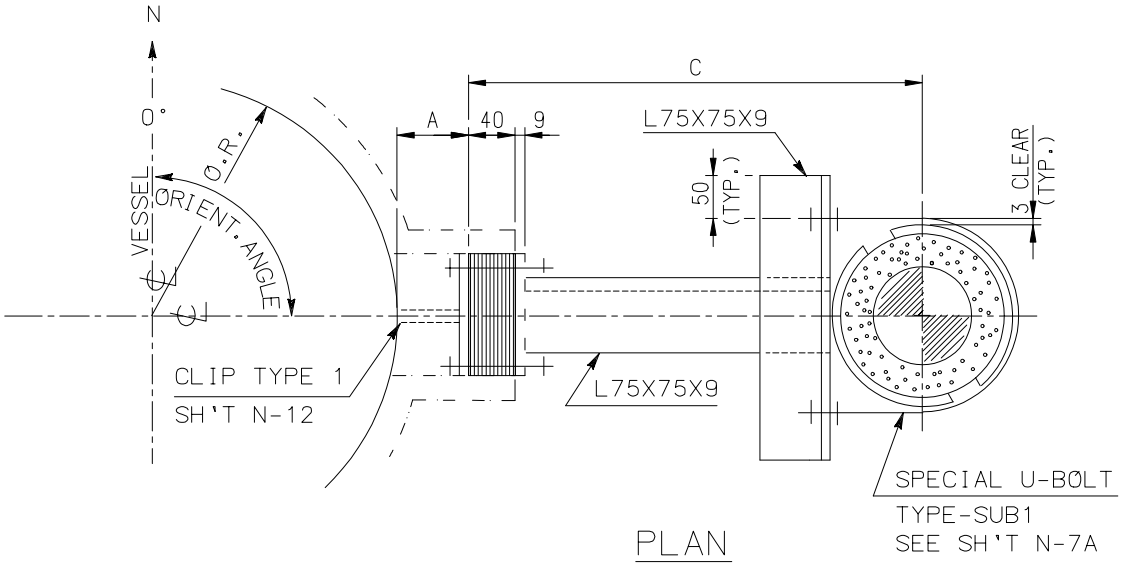

PLAN

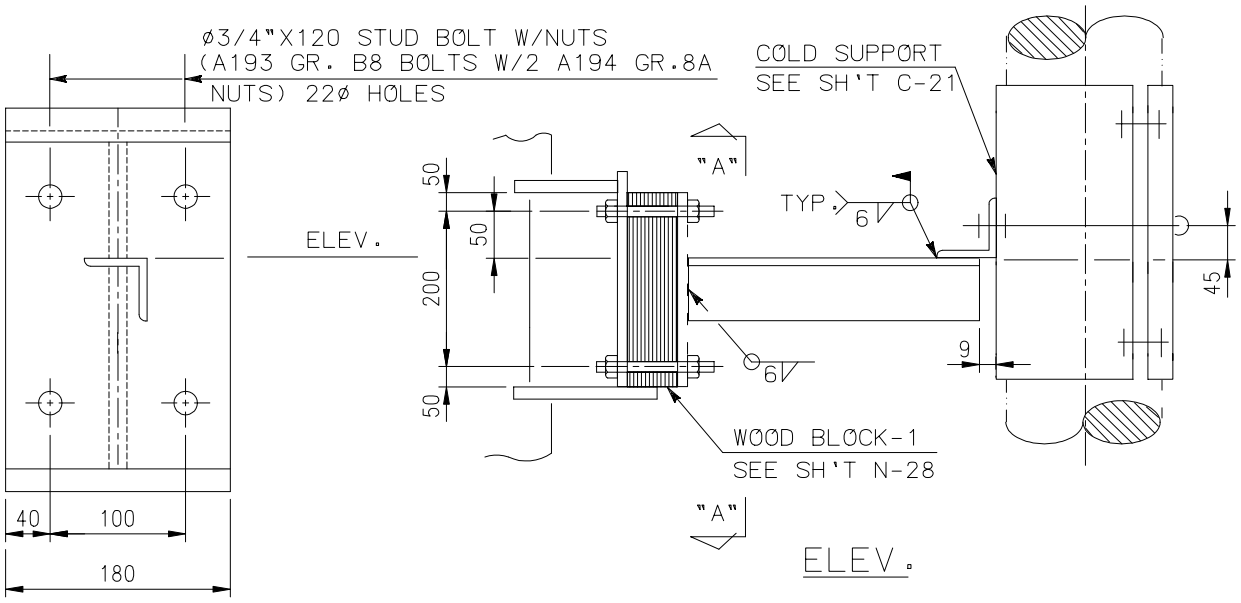

SEC.A-A

ELEV.

NOTES:

1. DESIGNATION NUMBER DENOTE AS FOLLOWS:

22C-A-CR9-2B-500

- 500 — DENOTE DIMENSION "C"(IN MM)
- 2B — DENOTE PIPE SIZE
- CR9 — DENOTE CRADLE NO. (NOTE 2)
- A — DENOTE CRADLE LENGTH
- 22C — DENOTE TYPE NO.

2. CRADLE NUMBER ARE A FUNCTION OF INSULATION SIZE, SEE SHEETS N-20 TO N-23

3. DIM. A, SEE NOTE 2 OF SHEET N-12A

中威工程顧問股份有限公司 CHUNG WEI ENGINEERING CONSULTING CO., LTD.					DETAIL OF COLD SUPPORT TYPE-22C (1 OF 4)	ENGINEERING STANDARD DSP-500-006	
BY			CHK.			C-35	REV. 0
DATE			APPR.				

FILE: C-35M.DWG

USE FOR COLD INS. VESSEL AND COLD INS. PIPE 3" AND 4"

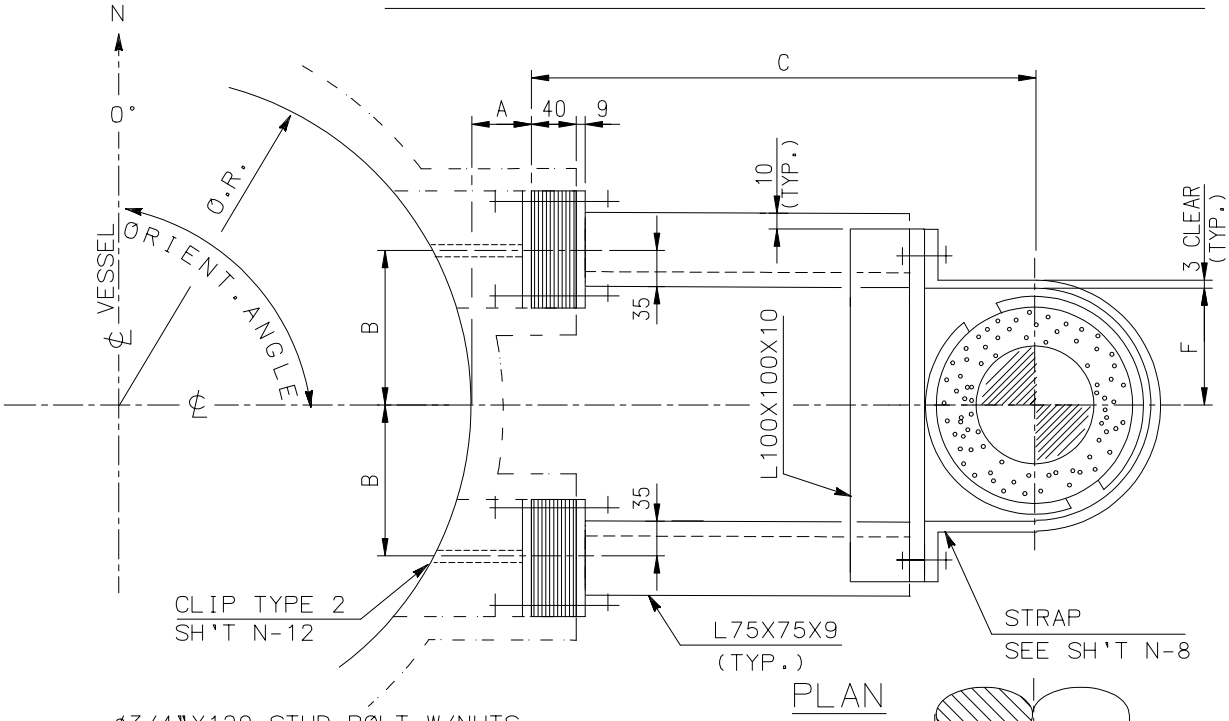

PLAN

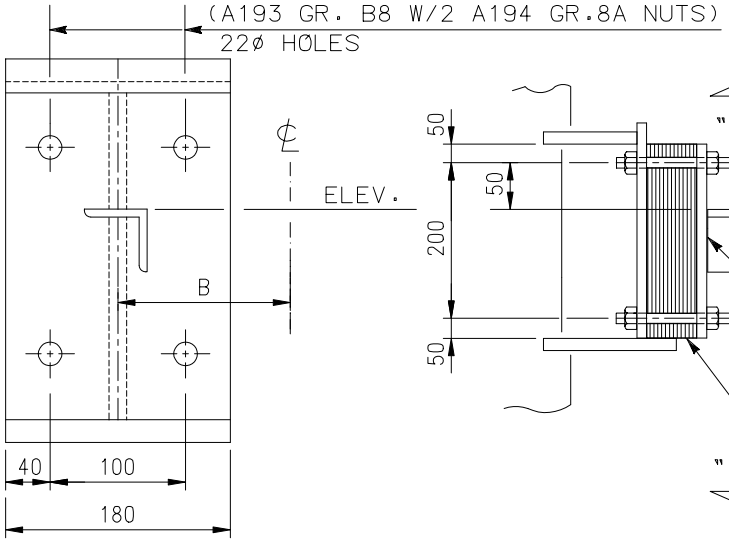

SEC.A-A

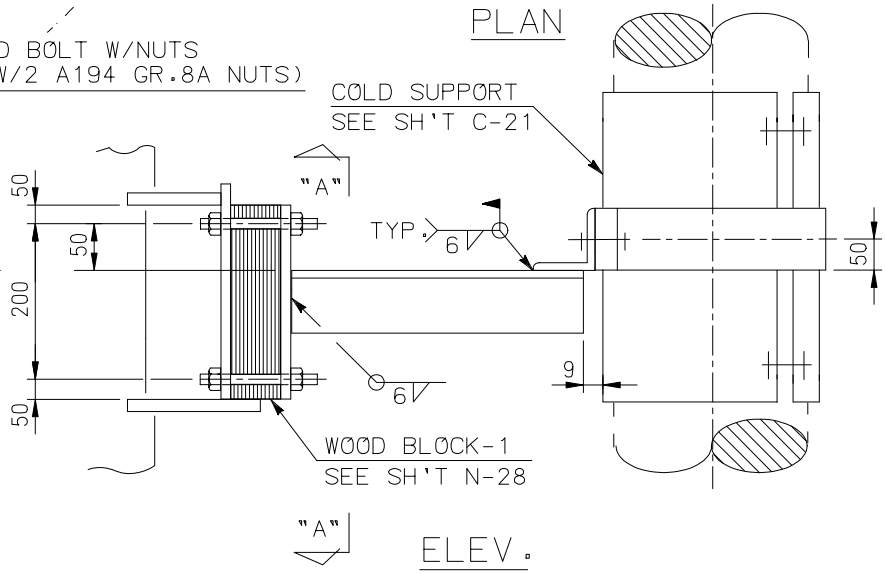

ELEV.

NOTES:

1. FOR MARK NO. OF SUPPORT, SEE SHEET C-41 NOTE 1.
2. FOR DIM. "F", SEE SHEETS N-20 TO N-23
3. DIM. B = F + 38
4. DIM. A, SEE NOTE 2 OF SHEET N-12A

中威工程顧問股份有限公司 CHUNG WEI ENGINEERING CONSULTING CO., LTD.					DETAIL OF COLD SUPPORT TYPE-22C (2 OF 4)	ENGINEERING STANDARD DSP-500-006	
BY			CHK.			C-36	REV. 0
DATE			APPR.				

FILE: C-36M.DWG

USE FOR COLD INS. VESSEL AND COLD INS. PIPE 6", 8" AND 10"

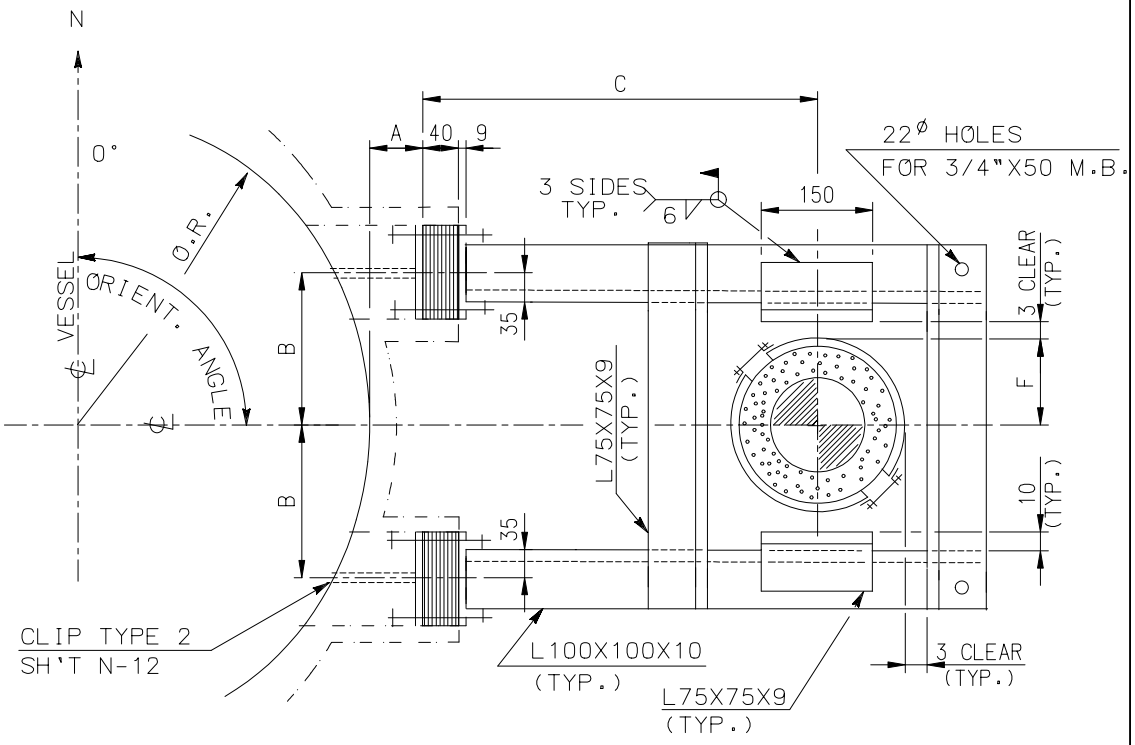

PLAN

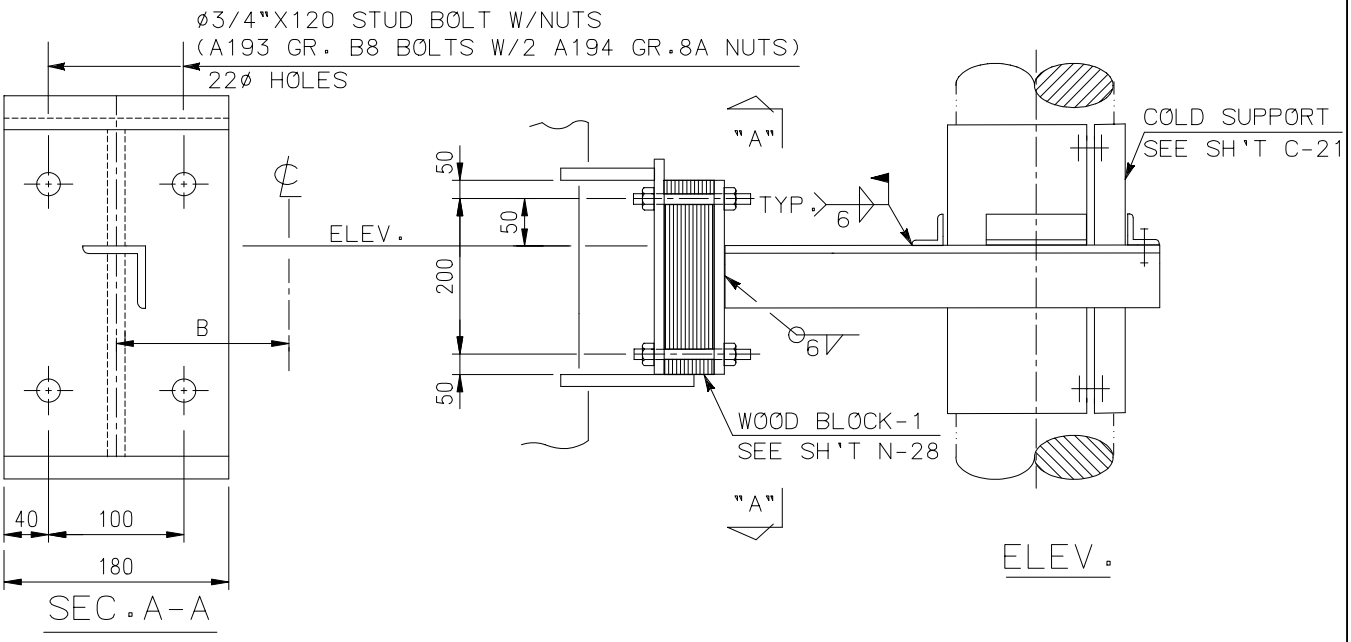

SEC.A-A

ELEV.

NOTES:

1. FOR MARK NO. OF SUPPORT, SEE SHEET C-41
2. FOR DIM. "F", SEE SHEETS N-20 TO N-23
3. DIM. B = F + 48
4. DIM. A, SEE NOTE 2 OF SHEET N-12A.

中威工程顧問股份有限公司 CHUNG WEI ENGINEERING CONSULTING CO., LTD.					DETAIL OF COLD SUPPORT TYPE-22C (3 OF 4)	ENGINEERING STANDARD DSP-500-006	
BY			CHK.			C-37	REV. 0
DATE			APPR.				

FILE: C-37M.DWG

USE FOR COLD INS. VESSEL AND COLD INS. PIPE 12" ~ 24"

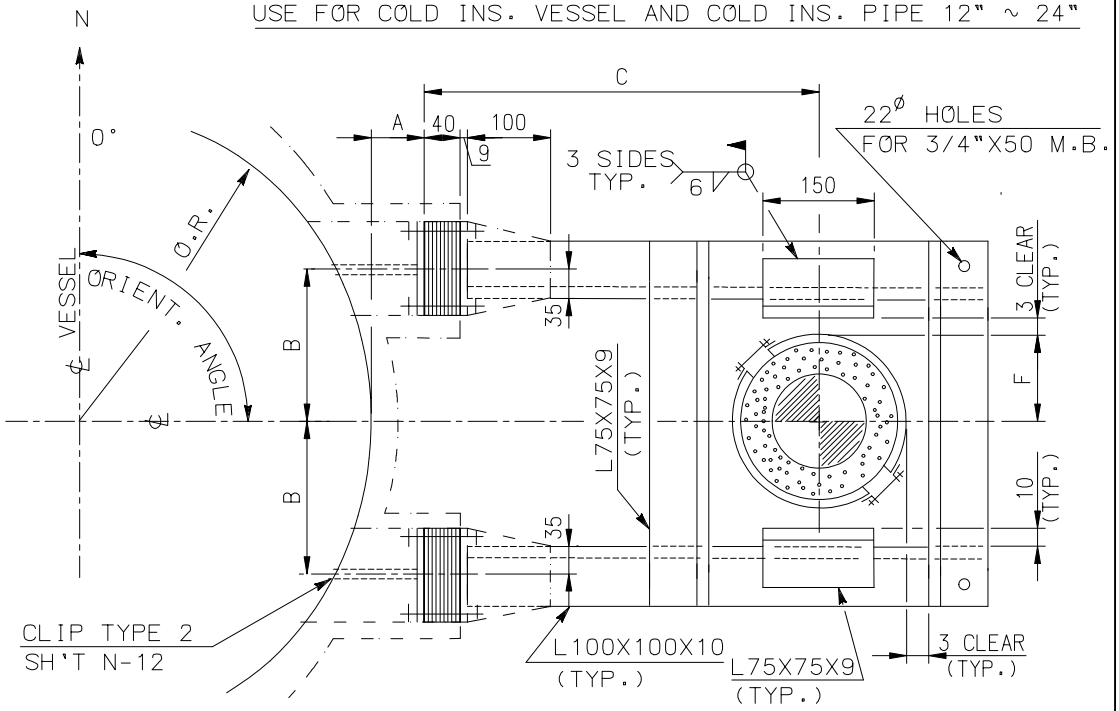

PLAN

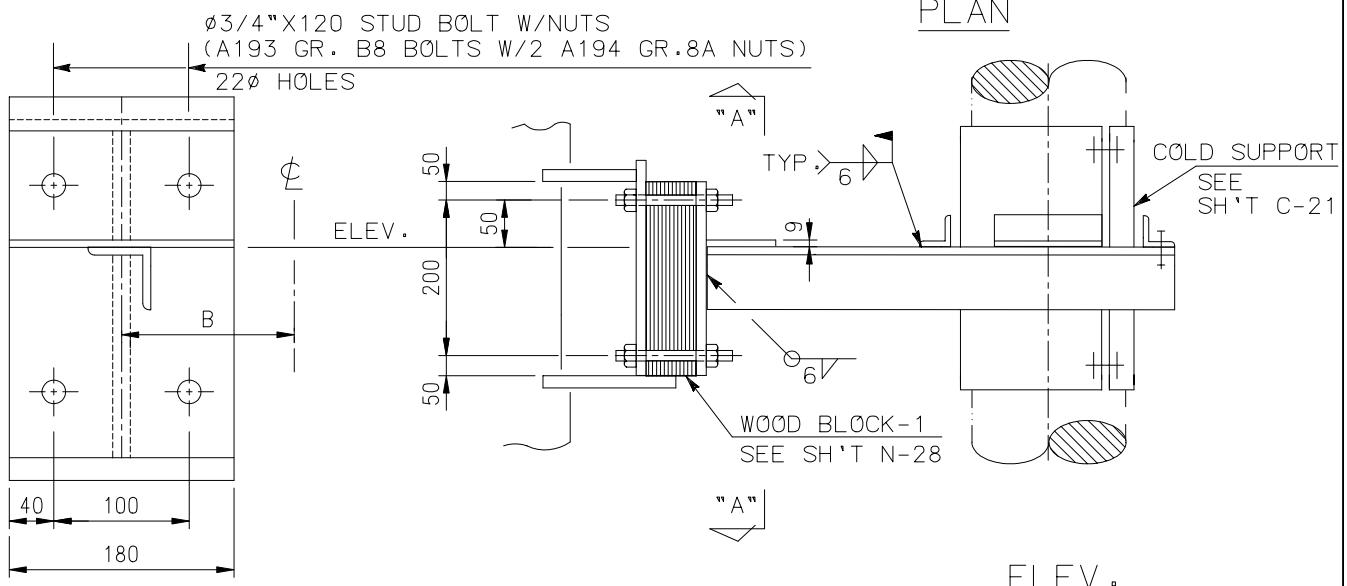

SEC.A-A

ELEV.

NOTES:

1. FOR MARK NO. OF SUPPORT, SEE SHEET C-35
2. FOR DIM. "F", SEE SHEETS N-20 TO N-23
3. DIM. B = F + 48
4. DIM. A, SEE NOTE 2 OF SHEET N-12A.

中威工程顧問股份有限公司 CHUNG WEI ENGINEERING CONSULTING CO., LTD.				DETAIL OF COLD SUPPORT TYPE-22C (4 OF 4)	ENGINEERING STANDARD DSP-500-006		
BY			CHK.			C-38	REV. 0
DATE			APPR.				

FILE: C-38M.DWG