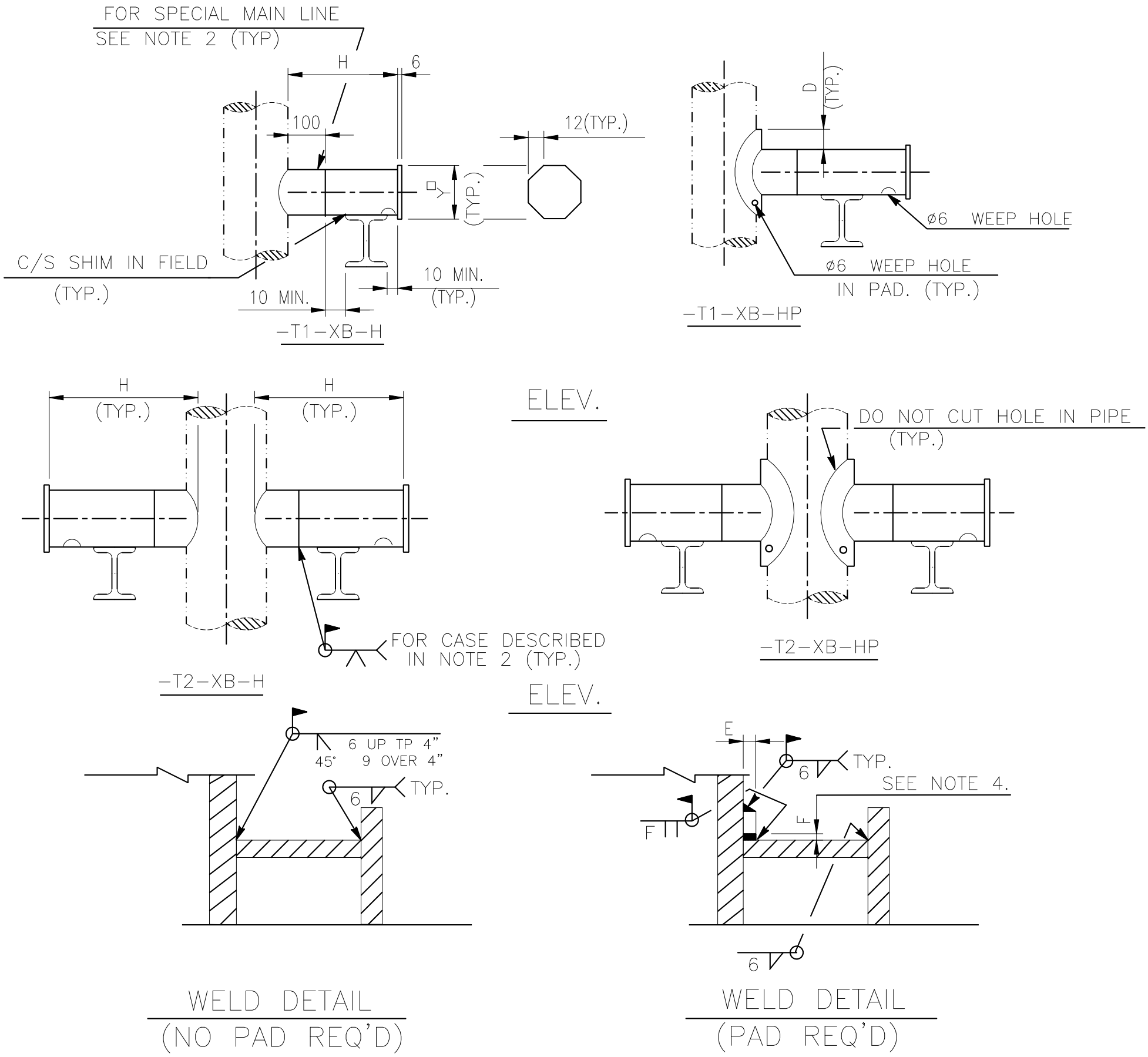

NOTES :

1. DESIGNATION NUMBER DENOTE AS FOLLOWS :

61-3B-T1-05(P)

- DENOTE TYPE NO.
- DENOTE NOM. TRUNN. PIPE SIZE
- DENOTE ONE-TRUNN. TYPE
- DENOTE THE LG. OF TRUNN. (IN 100mm)
- DENOTE REIN. PAD IS REQ'D.

2. FOR ALLOY STEEL,STAINLESS STEEL & STRESS RELIEF LINES, THE MATERIALS SHALL BE THE SAME AS MAIN LINES.

3. THE MOMENT CAPACITY OF THE TABLE ARE FOR ONE-TRUNN. TYPE, FOR TWO-TRUNN. TYPE THE CAPACITIES SHALL BE DOUBLED.

4. DIMENSION "F" : ALLOY OR STAINLESS TAKES 6 mm
CARBON STEEL TAKES 9 mm

中威工程顧問股份有限公司 CHUNG WEI ENGINEERING CONSULTING CO., LTD.						DETAIL OF PIPE SUPPORT TYPE-61 (1 OF 3)	ENGINEERING STANDARD E1906-DSP-500-006
BY	SHIH		CHK.	YANG			D-72 / REV. 0
DATE	12/12/'19		APPR.	CHEN			

FILE: D-72M.DWG

FOR CARBON STEEL

CORRECTION FACTORS								
TEMP.?F	200	300	400	500	600	650	700	750
FACTOR	1.000	1.055	1.109	1.168	1.239	1.275	1.313	1.430

DIMENSION (mm)

		TRUNNION – NOMINAL PIPE SIZE																	
		2"		3"		4"		6"		8"		10"		12"		14"			
		SCH. 80		SCH. 40 OR GREATER										3/8"W OR GREATER					
Y		80		110		140		190		240		290		340		380			
NOM. PIPE SIZE	PIPE SCH.	PAD REQUIREMENTS																PAD TH'K MIN. "E"	DIM. "D" mm
		NO PAD	PAD	NO PAD	PAD	NO PAD	PAD	NO PAD	PAD	NO PAD	PAD	NO PAD	PAD	NO PAD	PAD	NO PAD	PAD		
		MOMENT CAPACITY OF ONE TRUNNION. (INCH-KIPS)																	
3"	40	1	6															5.5	40
4"	40	1	7	3	15													6.0	50
6"	40	2	8	4	17	6	28											7.0	65
8"	40	2	9	5	19	8	32	17	69									8.5	90
10"	40			6	21	9	35	20	77	34	130							9.0	100
12"	3/8"W			5	21	9	34	19	74	33	125	51	195					9.5	100
14"	3/8"W					9	33	19	71	31	120	49	186	69	262			9.5	115
16"	3/8"W					8	30	17	66	29	112	46	174	64	245	78	295	9.5	115
18"	3/8"W							16	62	28	106	43	164	61	231	73	278	9.5	125
20"	3/8"W							16	59	26	100	41	156	57	219	69	264	9.5	125
24"	3/8"W							14	54	24	91	37	142	52	200	63	241	9.5	140
30"	3/8"W									21	82	33	127	47	179	57	215	9.5	165
36"	3/8"W											30	116	43	163	52	197	9.5	180
42"	3/8"W											28	107	40	151	48	182	9.5	190
3"	80	3	9															5.5	40
4"	80	3	10	7	21													6.0	50
6"	80	5	11	10	26	17	43											7.0	65
8"	80	5	11	12	26	20	49	43	106									8.5	90
10"	1/2"W			11	26	18	48	38	104	65	175							9.0	100
12"	1/2"W			10	26	16	45	35	97	59	164	92	255					9.5	100
14"	1/2"W					15	43	33	93	57	157	88	244	124	343			9.5	115
16"	1/2"W					14	40	31	87	53	147	82	228	116	321	140	387	9.5	115
18"	1/2"W							30	82	50	138	78	215	109	302	132	365	9.5	125
20"	1/2"W							28	77	47	131	74	204	104	287	125	346	9.5	125
24"	1/2"W							26	71	43	120	67	186	95	262	114	316	9.5	140
30"	1/2"W									39	107	60	167	85	234	102	283	9.5	165
36"	1/2"W											55	152	77	214	93	258	9.5	180
42"	1/2"W											51	141	72	198	86	239	9.5	190

FILE: D-73M.DWG

中威工程顧問股份有限公司
CHUNG WEI ENGINEERING CONSULTING CO., LTD.

BY	SHIH		CHK.	YANG	
DATE	12/12/'19		APPR.	CHEN	

DETAIL OF PIPE SUPPORT
TYPE-61
(2 OF 3)

ENGINEERING STANDARD
E1906-DSP-500-006
D-73
REV. 0

FOR STAINLESS STEEL

TEMP.°F

CORRECTION FACTORS											
TEMP.	TP304	TP316	TP347	TEMP.	TP304	TP316	TP347	TEMP.	TP304	TP316	TP347
-325 TO				750	1.60	0.99	1.13	1150	2.90	1.96	2.08
200	1.00	0.89	0.89	800	1.67	0.99	1.14	1200	3.70	2.45	3.33
300	1.11	0.93	0.98	850	1.72	1.01	1.16	1250	5.12	3.14	4.63
400	1.22	0.95	1.05	900	1.77	1.04	1.18	1300	6.80	4.16	6.17
500	1.33	0.97	1.10	950	1.83	1.10	1.20	1350	9.25	5.55	8.32
600	1.44	0.97	1.12	1000	1.89	1.19	1.23	1400	11.89	7.09	10.74
650	1.49	0.98	1.12	1050	1.96	1.36	1.27	1450	16.65	9.00	13.88
700	1.54	0.98	1.13	1100	2.22	1.60	1.33	1500	22.20	11.10	16.65

DIMENSION (mm)

		TRUNNION – NOMINAL PIPE SIZE																	
		2"		3"		4"		6"		8"		10"		12"		14"			
		MIN. SCH. SAME AS HEADER																	
Y		80		110		140		190		240		290		340		380			
NOM. PIPE SIZE	PIPE SCH.	PAD REQUIREMENTS																PAD TH'K MIN. "E"	DIM. "D"
		NO PAD	PAD	NO PAD	PAD	NO PAD	PAD	NO PAD	PAD	NO PAD	PAD	NO PAD	PAD	NO PAD	PAD	NO PAD	PAD		
		MOMENT CAPACITY OF ONE TRUNNION. (INCH-KIPS)																	
3"	5S	1	3															2.0	30
4"	5S	1	2	2	5													2.0	40
6"	5S	1	3	2	6	4	10											3.0	45
8"	5S	1	3	2	5	3	9	7	20									3.0	60
10"	5S			2	7	4	11	8	24	14	41							3.5	65
12"	5S			2	8	5	14	11	30	18	51	28	79					4.0	75
14"	5S					4	12	9	26	16	45	25	70	35	98			4.0	75
16"	5S					4	12	10	27	16	46	25	71	35	100	42	120	4.0	85
18"	5S							9	25	15	43	24	67	33	94	40	113	4.0	90
20"	5S							10	29	18	50	27	77	39	108	47	131	5.0	100
24"	5S							12	33	20	57	31	88	44	124	53	149	5.5	120
30"	5S									22	62	34	97	48	136	58	164	6.5	145
3"	10S	2	5															3.0	30
4"	10S	1	4	3	9													3.0	40
6"	10S	1	4	3	9	5	14											3.5	45
8"	10S	1	4	3	9	5	14	11	31									4.0	60
10"	10S			3	9	5	15	12	33	20	55							4.0	65
12"	10S			3	10	6	16	12	34	21	58	32	90					4.5	75
14"	10S					6	16	12	35	21	59	33	92	46	130			5.0	75
16"	10S					5	15	12	33	20	55	30	86	43	121	52	146	5.0	85
18"	10S							11	31	18	52	29	81	40	114	49	138	5.0	90
20"	10S							13	37	22	62	34	96	48	135	58	163	5.5	100
24"	10S							14	41	25	70	38	108	54	152	65	183	6.5	120
30"	10S									31	87	48	135	67	189	81	228	8.0	145

FILE: D-74M.DWG

中威工程顧問股份有限公司
CHUNG WEI ENGINEERING CONSULTING CO., LTD.

BY	SHIH		CHK.	YANG	
DATE	12/12/'19		APPR.	CHEN	

DETAIL OF PIPE SUPPORT

TYPE-61

(3 OF 3)

ENGINEERING STANDARD

E1906-DSP-500-006

D-74

REV. 0