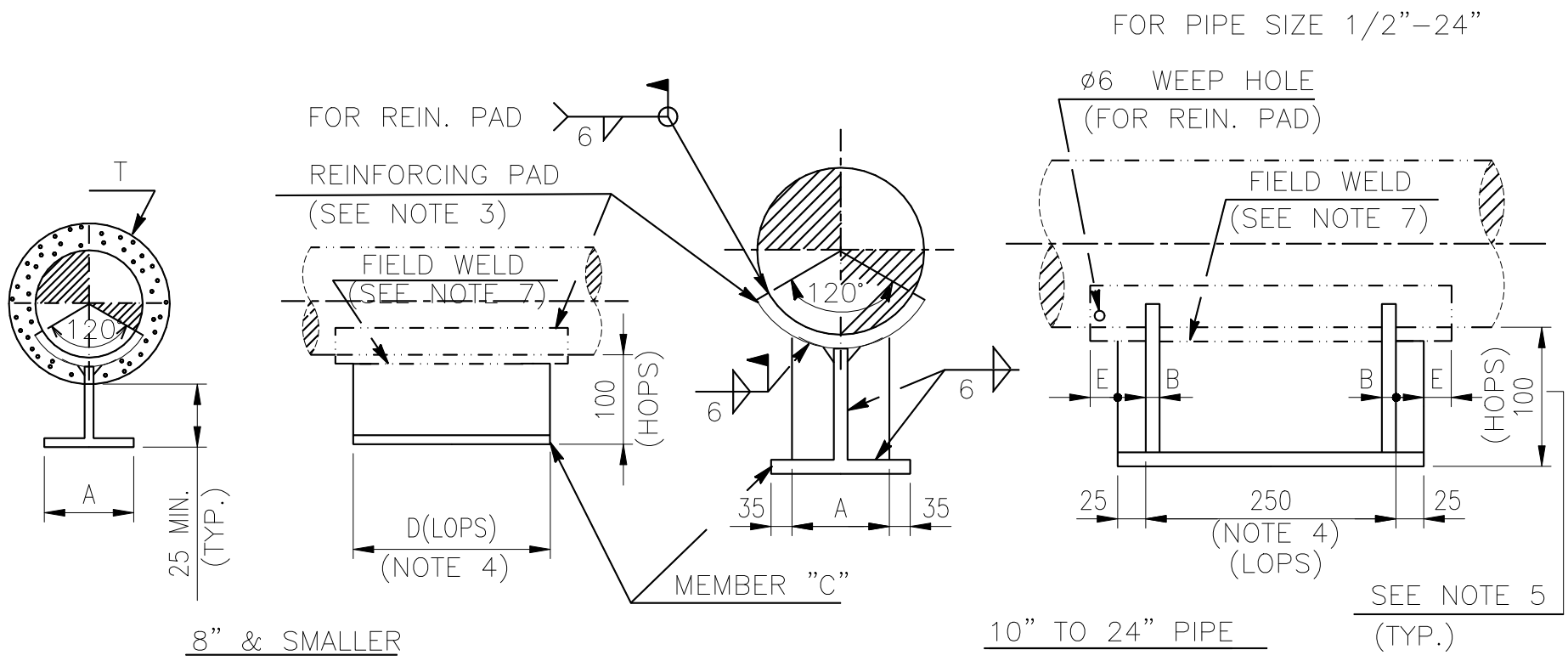

ELEV.

DIMENSION (mm)

LINE SIZE	A	B	C (NOTE 1)	D (NOTE 4)	E
1/2"	100	–	CUT FROM H-200X100X5.5X8	150	–
3/4"	100	–		150	–
1"	100	–		150	–
1 1/2"	100	–		150	–
2"	100	–		150	50
2 1/2"	100	–		150	50
3"	100	–		250	50
4"	100	–		250	50
5"	100	–		250	50
6"	100	–		250	50
8"	100	–		250	50
10"	130	9	CUT FROM H-200X200X8X12	–	50
12"	130	9		–	50
14"	130	9		–	50
16"	250	12	FAB. FROM 12^t PLATE	–	50
18"	250	12		–	50
20"	250	12		–	50
24"	300	12		–	50

NOTES : (FOR SH'T D-80,80A ONLY)

1. SHOES FOR PIPES 1 1/2" & SMALLER MAY BE FABRICATED FROM 6 ^{t}PLATE, 2" THRU. 14" FROM 9 ^{t} PLATE, 16" THRU. 24" FROM 12 ^{t}PLATE
2. DESIGNATION NUMBER DENOTE AS FOLLOWS :

66-1 1/2B(P)-A(A)-130-500

- 66 — DENOTE TYPE NO.
- 1 1/2 — DENOTE LINE SIZE
- B — DENOTE REIN. PAD IS REQ'D
- A — SEE SH'T D-80A TABLE "A"
- A — SEE SH'T D-80A TABLE "B"
- 130 — MODIFY HOPS=130 (IN mm) IF ANY
- 500 — MODIFY LOPS=500 (IN mm) IF ANY

3. FOR PADS MATERIAL USE PIPE MATERIAL THAT CUT FROM THE PIPE OR EQUIVALENT TO THE PIPE.
4. LONGITUDINAL LENGTH OF PIPE SHOE (SAY LOPS) SHALL BE CALCULATED IN THE CASE WITH PIPE STOP.
5. HOPS=HEIGHT OF PIPE SHOE, LOPS=LENGTH OF PIPE SHOE.

FILE: D-80M.DWG

中威工程顧問股份有限公司 CHUNG WEI ENGINEERING CONSULTING CO., LTD.						DETAIL OF PIPE SUPPORT TYPE-66 (1 OF 3)	ENGINEERING STANDARD E1906-DSP-500-006	
BY	SHIH		CHK.	YANG			D-80	REV. 0
DATE	12/12/'19		APPR.	CHEN				

NOTES : (CONT'D)

5.

TABLE "A"

INSULATION TH'K (mm)	HEIGHT OF SHOE (mm) (SAY HOPS)	SYMBOL
75 & LESSER	100	NONE
80 THRU. 125	150	A
130 THRU. 175	200	B
180 THRU. 200	220(NOTE 1)	C

TABLE "B"

MAT'L OF SHOES	FABRICATED FROM (NOTE 1)	SYMBOL
CARBON STEEL	SHAPE STEEL OR C/S PLATE	NONE
ALLOY STEEL	A/S PLATE	(A)
STAINLESS STEEL	S/S PLATE	(S)

6. FOR MATERIAL SPECIFICATION SEE SH'T P-2.

7. FIELD WELD OF PIPE SHOE .

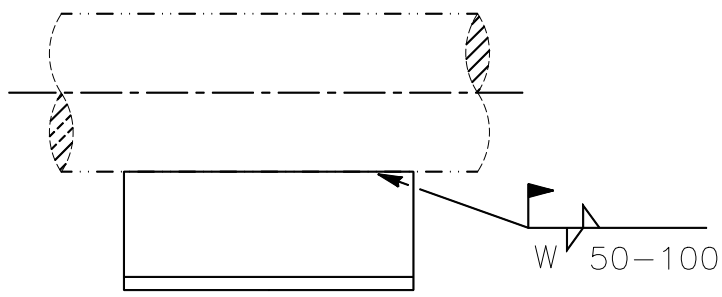

W=4 FOR PIPE SCH. 80 & BELOW

W=6 FOR PIPE SCH. 160 & ABOVE

1/2"~2"

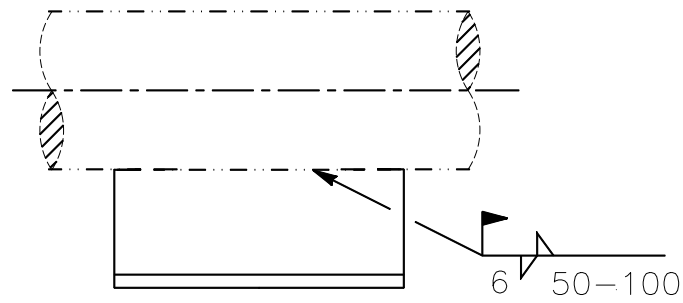

2 1/2"~8"

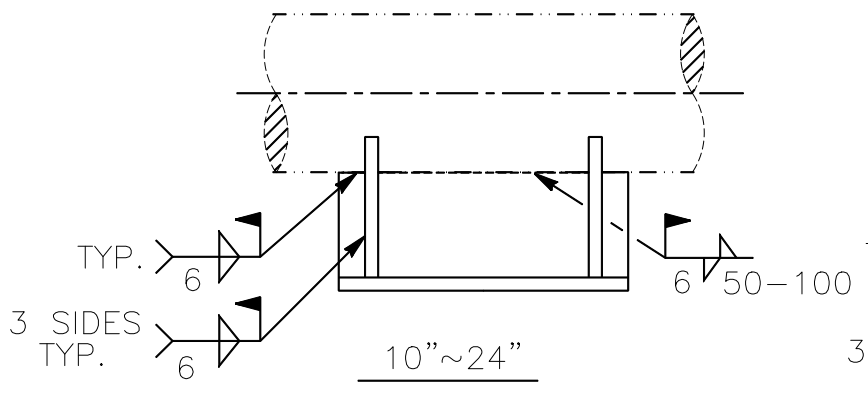

10"~24"

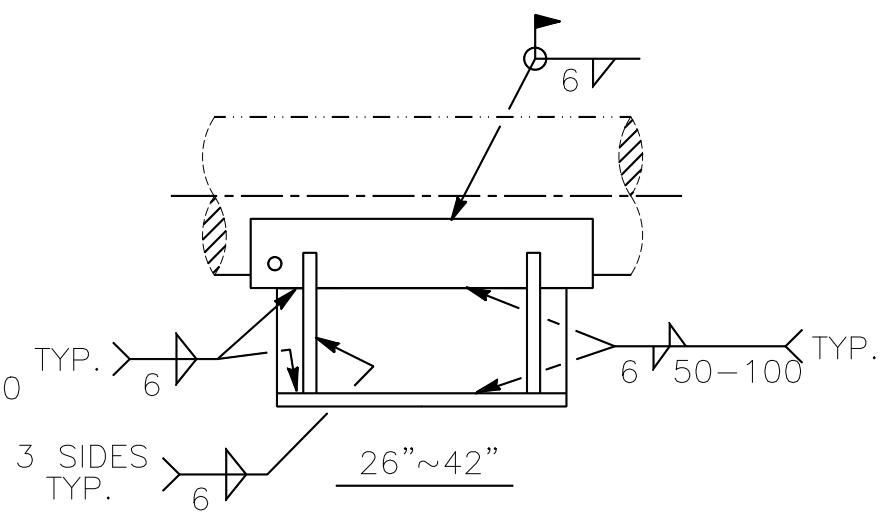

26"~42"

中威工程顧問股份有限公司 CHUNG WEI ENGINEERING CONSULTING CO., LTD.						DETAIL OF PIPE SUPPORT TYPE-66 (2 OF 3)	ENGINEERING STANDARD E1906-DSP-500-006	
BY	SHIH		CHK.	YANG			D-80A	REV. 0
DATE	12/12/'19		APPR.	CHEN				

FILE: D-80MA.DWG

FOR PIPE SIZE 26''-42''

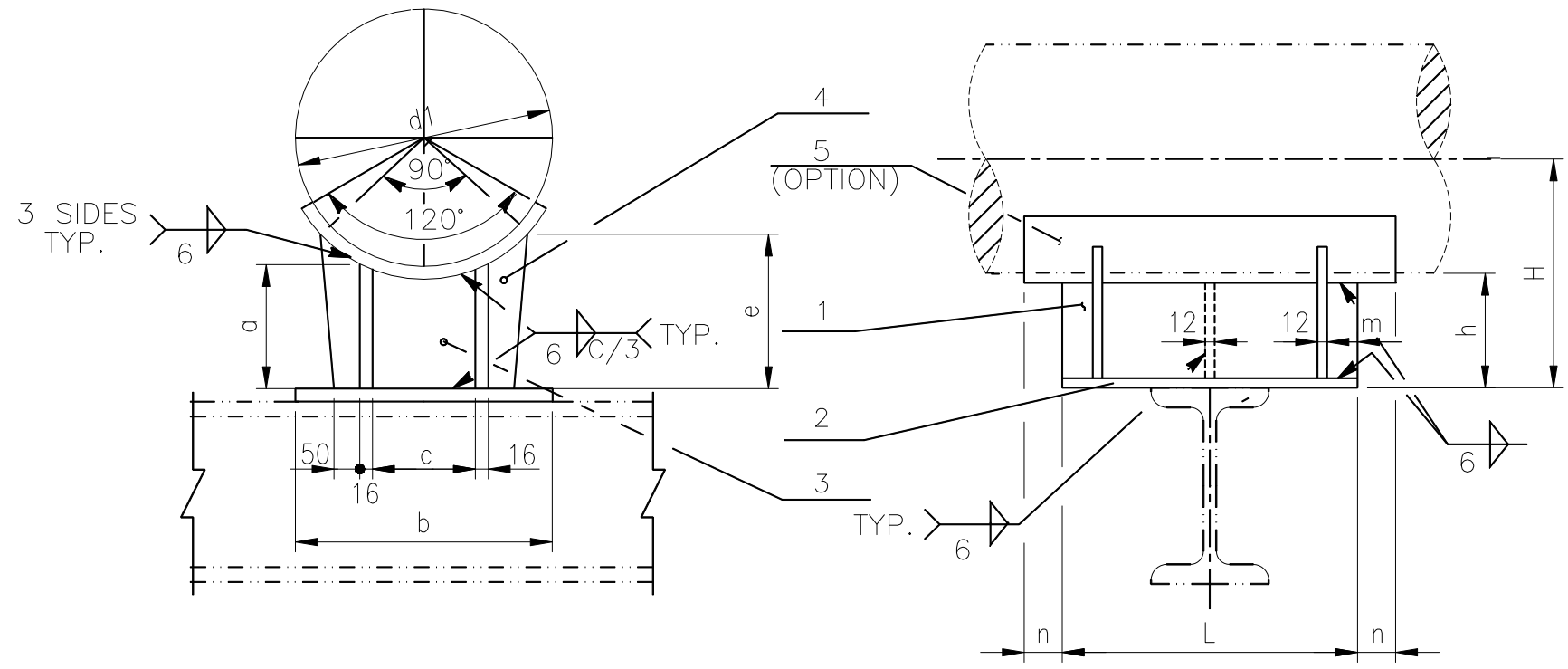

(FOR OTHER WELDS, SEE SH'T D-80A NOTE 7)

DIMENSION (mm)

NO	1		2	3	4	5	DIMEMSION										
PIECE	2		1	1	4	1											
PIPE SIZE	(NOTE 4) FOOT a		FOOT PLATE	PLATE	PLATE	PAD											
	A (NOTE 2)	B (NOTE 2)					b	c	e (NOTE 2,4)		h (NOTE 2)		H (NOTE 2)		L	m	n
									A	B	A	B	A	B			
26"	148	198	16 TH'K	12 TH'K	12 TH'K	12 TH'K (MIN.)	430	230	222	272	150	200	480	530	540	35	75
28"	148	198					440	240	230	280	150	200	506	556	540	35	75
30"	148	198					450	250	237	287	150	200	531	581	540	35	75
32"	148	198					460	260	244	294	150	200	556	606	740	40	75
36"	152	202					500	300	259	309	150	200	607	657	740	40	75
40"	156	206					535	335	274	324	150	200	658	708	740	40	75
42"	156	206					550	350	281	331	150	200	683	733	740	40	75

NOTES : (FOR SH'T D-80B ONLY)

1. DESIGNATION NUMBER DENOTE AS FOLLOWS :

66-28B-A(A)-130-500

- 66 — DENOTE TYPE NO.
- 28 — DENOTE LINE SIZE
- B — SEE NOTE 2
- A — SEE SH'T D-80A TABLE "B"
- 130 — MODIFY HOPS=130 (IN mm) IF ANY
- 500 — MODIFY LOPS=500 (IN mm) IF ANY

2. TYPE-A FOR INSULATION THICKNESS < ≦100
   TYPE-B FOR INSULATION THICKNESS > 100 < ≦150

3. LOADING CONDITION: CARBON STEEL SADDLE WITH MAX. PIPE TEMPERATURE 700°F & PRESSURE 300 PSI.

4. DIMENSION "a" & "e" ARE CALCULATED BASE ON PIPE SHOE WITH 12 mm TH'K REINF. PAD.

5. HOPS=HEIGHT OF PIPE SHOE, LOPS=LENGTH OF PIPE SHOE

中威工程顧問股份有限公司 CHUNG WEI ENGINEERING CONSULTING CO., LTD.						DETAIL OF PIPE SUPPORT TYPE-66 (3 OF 3)	ENGINEERING STANDARD E1906-DSP-500-006	
BY	SHIH		CHK.	YANG			D-80B	REV. 0
DATE	12/12/'19		APPR.	CHEN				

FILE: D-80MB.DWG