FOR PIPE SIZE 1/2"-24"

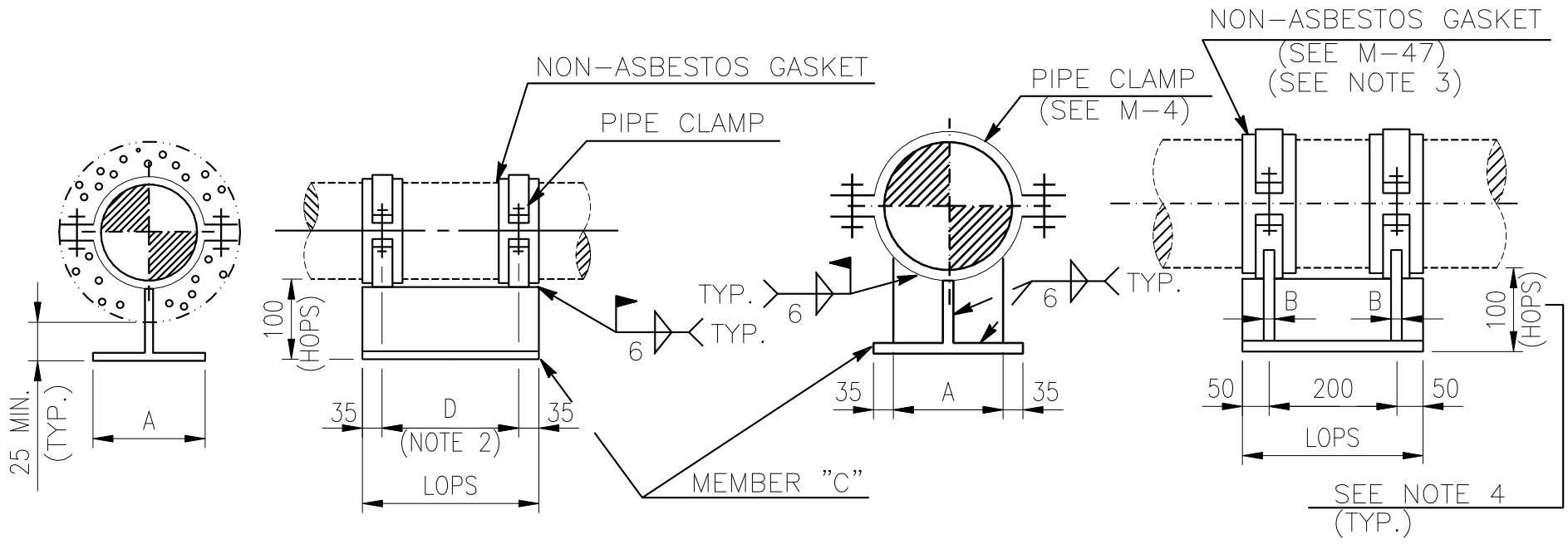

(8" & SMALLER) ELEV. (10" TO 24" PIPE)

DIMENSIONS (mm)

LINE SIZE	A	B	C	PIPE CLAMP TYPE	D (2)
1/2"	100	–	CUT FROM H200X100X5.5X8	PCL-A-1/2B	80
3/4"	100	–		PCL-A-3/4B	80
1"	100	–		PCL-A- 1B	80
1 1/2"	100	–		PCL-A-1 1/2B	80
2"	100	–		PCL-A- 2B	80
2 1/2"	100	–		PCL-A-2 1/2B	80
3"	100	–		PCL-A- 3B	180
4"	100	–		PCL-A- 4B	180
5"	100	–		PCL-A- 5B	180
6"	100	–		PCL-A- 6B	180
8"	100	–		PCL-A- 8B	180
10"	130	9	CUT FROM H200X200X8X12	PCL-A- 10B	–
12"	130	9		PCL-A- 12B	–
14"	130	9		PCL-A- 14B	–
16"	250	12	FAB. FROM 12t PLATE	PCL-A- 16B	–
18"	250	12		PCL-A- 18B	–
20"	250	12		PCL-A- 20B	–
24"	300	12		PCL-A- 24B	–

NOTES :

1. DESIGNATION NUMBER DENOTE AS FOLLOWS :

   67-3/4B-A-130-500

   - 67: DENOTE TYPE NO.
   - 3/4B: DENOTE LINE SIZE
   - A: SEE NOTE 4
   - 130: MODIFY HOPS=130 (IN mm) IF ANY
   - 500: MODIFY LOPS=500 (IN mm) IF ANY

2. LONGITUDINAL LENGTH OF PIPE SHOE (SAY LOPS) SHALL BE CALCULATED IN CASE WITH PIPE STOP.

3. THIS TYPE IS USUALLY USED FOR ALLOY STEEL AND STAINLESS STEEL LINES.(LINE MAX. TEMP. : 750?F)

4. REF. SH'T D-80A TABLE "A"

5. HOPS=HEIGHT OF PIPE SHOE, LOPS=LENGTH OF PIPE SHOE.

中威工程顧問股份有限公司 CHUNG WEI ENGINEERING CONSULTING CO., LTD.					
BY	SHIH		CHK.	YANG	
DATE	12/12/'19		APPR.	CHEN	

DETAIL OF PIPE SUPPORT

TYPE-67

(1 OF 2)

ENGINEERING STANDARD

E1906-DSP-500-006

D-81

REV. 0

FILE: D-81M.DWG

FOR PIPE SIZE 26"-42"

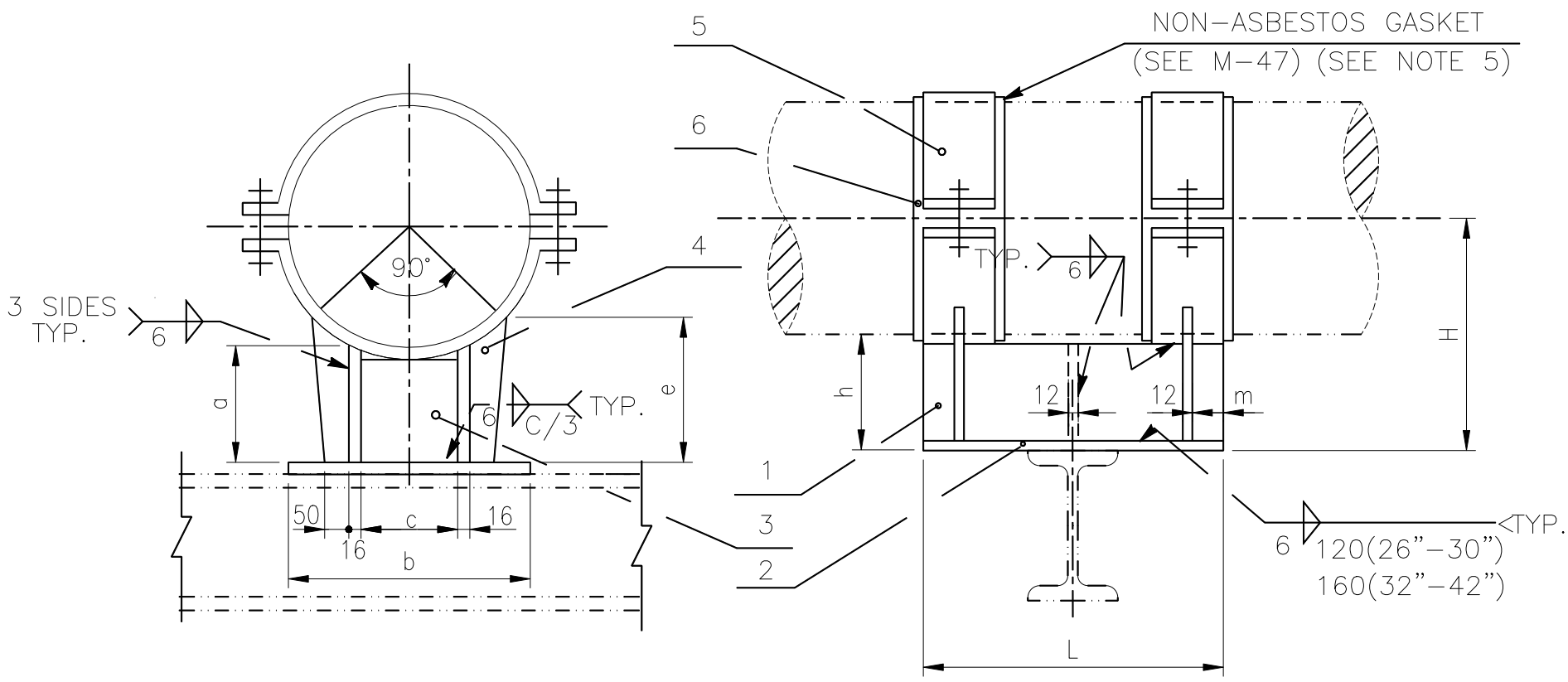

DIMENSIONS (mm)

NO.	1		2	3	4	5	6	DIMEMSION									
PIECE	2		1	1	4	2	2										
PIPE SIZE	FOOT a		FOOT PLATE	PLATE	PLATE	CLAMP (NOTE3)	NON-ASBESTOS GASKET										
	A	B						b	c	e		h		H		L	m
										A	B	A	B	A	B		
26"	148	198	16 TH'K	12 TH'K	12 TH'K	FAB. FROM 12t	1.5t TH'K	430	230	222	272	150	200	480	530	540	35
28"	148	198						440	240	230	280	150	200	506	556	540	35
30"	148	198						450	250	237	287	150	200	531	581	540	35
32"	148	198						460	260	244	294	150	200	556	606	740	40
36"	152	202						500	300	259	309	150	200	607	657	740	40
40"	156	206						535	335	274	324	150	200	658	708	740	40
42"	156	206						550	350	281	331	150	200	683	733	740	40

NOTES :

1. DESIGNATION NUMBER DENOTE AS FOLLOWS :

67-30B-A-130-500

- 67 — DENOTE TYPE NO.
- 30 — DENOTE LINE SIZE
- A — SEE NOTE 2
- 130 — MODIFY HOPS=130 (IN mm) IF ANY
- 500 — MODIFY LOPS=500 (IN mm) IF ANY

2. TYPE-A FOR INSULATION THICKNESS < ≦100
   TYPE-B FOR INSULATION THICKNESS > 100 < ≦150
3. FOR CLAMP DETAIL SEE SH'T M-56.
4. FOR NON-ASBESTOS GASKET SEE SH'T M-47 .
5. THIS TYPE IS USUALLY USED FOR ALLOY STEEL AND STAINLESS STEEL LINES (MAX. LINE TEMP.: 750°F)
6. LOADING CONDITION : CARBON STEEL SADDLE WITH MAX. PIPE TEMPERATURE 700?F
7. HOPS=HEIGHT OF PIPE SHOE, LOPS=LENGTH OF PIPE SHOE.

中威工程顧問股份有限公司 CHUNG WEI ENGINEERING CONSULTING CO., LTD.						DETAIL OF PIPE SUPPORT TYPE-67 (2 OF 2)	ENGINEERING STANDARD E1906-DSP-500-006	
BY	SHIH		CHK.	YANG			D-81A	REV. 0
DATE	12/12/'19		APPR.	CHEN				

FILE: D-81MA.DWG